NEUHEIT
NEW



THE SCORPION

The Scorpion is the smallest pneumatic HEPA vacuum available to fabricators and maintainers. It replaces conventional gun vacuums for FOD cleanup, and is powerful enough for vacuum sanding.

Features

- Recovery capacity 1qt
- HEPA filter efficiency H13 99.97@ 0.3 mu
- Consumes 15 cfm @ 90 ps

NEW AVAILABLE

Weitere Informationen auf Anfrage / MORE INFORMATION ON REQUEST



Schraubheftnadeln, mit Schutzkappe und Rändelmutter
FASTENERS WITH KNURLED NUT AND SAFETY CAP

Art.Nr./PART NO.	**Durchmesser**	DIAMETER	**Spannber.**	GRIP	**Farbe**	COLOR
2072KU-20	2,0 mm	5/64“	0-6 mm	0-1/4"	schwarz	black
2072KU-24	2,4 mm	3/32“	0-6 mm	0-1/4"	braun	brown
2072KU-26	2,6 mm	#38	0-6 mm	0-1/4"	blau	blue
2072KU-32	3,2 mm	1/8“	0-6 mm	0-1/4"	rot	red
2072KU-35	3,5 mm	9/64“	0-6 mm	0-1/4"	grau	grey
2072KU-40	4,0 mm	5/32“	0-6 mm	0-1/4"	gelb	yellow
2072KU-45	4,5 mm	#16	0-6 mm	0-1/4"	transparent	transparent
2072KU-48	4,8 mm	3/16“	0-6 mm	0-1/4"	grün	green
2072KU-50	5,0 mm	#9	0-6 mm	0-1/4"	schwarz	black
2072KU-56	5,6 mm	7/32“	0-10 mm	0-3/8“	weiß	white



Schraubheftnadeln, lang, mit Schutzkappe und Rändelmutter
FASTENERS, LONG, WITH KNURLED NUT AND SAFETY CAP

Art.Nr./PART NO.	**Durchmesser**	DIAMETER	**Spannber.**	GRIP	**Farbe**	COLOR
2072KU-24 x 15	2,4 mm	3/32“	5-15 mm	3/16-19/32“	braun	brown
2072KU-26 x 15	2,6 mm	#38	5-15 mm	3/16-19/32“	blau	blue
2072KU-32 x 15	3,2 mm	1/8“	5-15 mm	3/16-19/32“	rot	red
2072KU-35 x 15	3,5 mm	9/64“	5-15 mm	3/16-19/32“	grau	grey
2072KU-40 x 15	4,0 mm	5/32“	5-15 mm	3/16-19/32“	gelb	yellow
2072KU-45 x 15	4,5 mm	#16	5-15 mm	3/16-19/32“	transparent	transparent
2072KU-48 x 15	4,8 mm	3/16“	5-15 mm	3/16-19/32“	grün	green
2072KU-50 x 15	5,0 mm	#9	5-15 mm	3/16-19/32“	schwarz	black
2072KU-56 x 15	5,6 mm	7/32“	5-15 mm	3/16-19/32“	weiß	white
2072KU-60 x 15	6,0 mm	15/64“	0-15 mm	0-19/32“	braun	brown
2072KU-64 x 15	6,4 mm	1/4“	0-15 mm	0-19/32“	silber	silver



Schraubheftnadeln, extra lang, mit Schutzkappe und Rändelmutter
FASTENERS, EXTRA LONG, WITH KNURLED NUT AND SAFETY CAP

Art.Nr./PART NO.	**Durchmesser**	DIAMETER	**Spannber.**	GRIP	**Farbe**	COLOR
2072KU-32 x 10-25	3,2 mm	1/8“	10-25 mm	3/8"-1"	rot	red
2072KU-40 x 10-25	4,0 mm	5/32“	10-25 mm	3/8"-1"	gelb	yellow
2072KU-48 x 10-25	4,8 mm	3/16“	10-25 mm	3/8"-1"	grün	green
2072KU-60 x 10-25	6,0 mm	15/64“	10-25 mm	3/8"-1"	braun	brown
2072KU-64 x 10-25	6,4 mm	1/4“	10-25 mm	3/8"-1"	silber	silver

Schraubglocken für Schraubheftnadeln mit Rändelmutter
NUT SETTER FOR FASTENERS WITH KNURLED NUTS

2072KU & MBBN723A

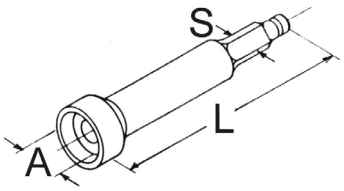



452025



452016



MBBN513E6,3-85

Art.Nr. / PART NO.	**A**	**L**	**S = Sechskant /** HEX SHANK	**Empfohlen für Heftnadeln mit:** Recommend for Fasteners with: **Durchmesser** Diameter	**Spannbereich** Grip Range
MBBN513E6,3-85	**16,5 mm** (0.65")	**85 mm** (3.35")	**1/4"** (6,35 mm) DIN3126E6,3	2,0 - 5,9 mm	0-15 mm
MBBN513E8-85	**16,5 mm** (0.65")	**85 mm** (3.35")	**5/16"** (7,94 mm) DIN3126E8	2,0 - 5,9 mm	0-15 mm
452012	**16,5 mm** (0.65")	**85 mm** (3.35")	**1/4"** (6,35 mm) DIN3126E6,3	2,0 - 5,9 mm	0-15 mm
452025	**16,5 mm** (0.65")	**85 mm** (3.35")	**5/16"** (7,94 mm) DIN3126E8	2,0 - 5,9 mm	0-15 mm
452026	**16,5 mm** (0.65")	**112 mm** (4.41")	**5/16"** (7,94 mm) DIN3126E8	2,0 - 5,9 mm	0-25 mm
452023	**18,5 mm** (0.73")	**85 mm** (3.35")	**5/16"** (7,94 mm) DIN3126E8	6,0 - 6,4 mm	0-15 mm
452016	**18,5 mm** (0.73")	**112 mm** (4.41")	**1/4"** (6,35 mm) DIN3126E6,3	6,0 - 6,4 mm	0-25 mm
452024	**18,5 mm** (0.73")	**112 mm** (4.41")	**5/16"** (7,94 mm) DIN3126E8	6,0 - 6,4 mm	0-25 mm

Andere Abmessungen auf Anfrage / OTHER DIMENSIONS ON REQUEST



Federheftnadel, zangenbetätigt
FASTENERS, SPRING-LOADED, PLIER-OPERATED

Art.Nr./PART NO.	**Durchmesser**	DIAMETER	**Spannber.**	GRIP	**Farbe**	COLOR
2071Z-20	2,0 mm	5/64“	0-6 mm	0-1/4"	schwarz	black
2071Z-24	2,4 mm	3/32“	0-6 mm	0-1/4"	braun	brown
2071Z-26	2,6 mm	#38	0-6 mm	0-1/4"	silber	silver
2071Z-32	3,2 mm	1/8“	0-6 mm	0-1/4"	kupfer	copper
2071Z-40	4,0 mm	5/32“	0-6 mm	0-1/4"	gelb	yellow
2071Z-48	4,8 mm	3/16“	0-6 mm	0-1/4"	silber	silver



Federheftnadel, zangenbetätigt
FASTENERS, SPRING-LOADED, PLIER-OPERATED

Art.Nr./PART NO.		**Durchmesser**	DIAMETER	**Spannber.**	GRIP	**Farbe**	COLOR
KWIK-LOK	WEDGELOCK						
K-1/16	**M-1/16**	1,6 mm	1/16"	0-6 mm	0-1/4"	schwarz	black
K-7/32	**M-7/32**	5,6 mm	7/32“	0-6 mm	0-1/4“	zink	zinc
K-1/4	**M-1/4**	6,4 mm	¼“	0-6 mm	0-1/4“	kupfer	copper



Federheftnadel, zangenbetätigt
FASTENERS, SPRING-LOADED, PLIER-OPERATED

Art.Nr./PART NO.		**Durchmesser**	DIAMETER	**Spannber.**	GRIP	**Farbe**	COLOR
KWIK-LOK	WEDGELOCK						
KHD-3/32	**MHD-3/32**	2,4 mm	3/32“	0-12,7 mm	0-1/2"	zink	zinc
KHD-1/8	**MHD-1/8**	3,2 mm	1/8“	0-12,7 mm	0-1/2"	kupfer	copper
KHD-5/32	**MHD-5/32**	4,0 mm	5/32“	0-12,7 mm	0-1/2"	schwarz	black
KHD-3/16	**MHD-3/16**	4,8 mm	3/16“	0-12,7 mm	0-1/2"	messing	brass
KHD-7/32	**MHD-7/32**	5,6 mm	7/32“	0-12,7 mm	0-1/2"	zink	zinc
KHD-1/4	**MHD-1/4**	6,4 mm	1/4“	0-12,7 mm	0-1/2"	kupfer	copper



Federheftnadel, handbetätigt
FASTENERS, SPRING-LOADED, HAND-OPERATED

Art.Nr./PART NO.	**Durchmesser**	DIAMETER	**Spannber.**	GRIP	**Farbe**	COLOR
2071HZ-32	3,2 mm	1/8“	0-6 mm	0-1/4"	kupfer	copper

Heftnadelzange, für Heftnadeln und Blechklemmen
PLIER FOR FASTENERS AND CLAMPS



Art.Nr./PART NO.
TP-74



Art.Nr./PART NO.
2050

Andere Abmessungen auf Anfrage / OTHER DIMENSIONS ON REQUEST



Schraubheftnadeln, mit Sechskantmutter
FASTENERS, HEX NUT TYPE

Art.Nr./PART NO.		**Durchmesser** (D)	DIAMETER (D)	**Spannber.** (G)	GRIP (G)	**Farbe**	COLOR
HEX NUT PART NO.	**CROSS REF. EQUIVALENT**						
KHN-FW-3/32	**HNX-SF-3/32**	2,4 mm	3/32“	0-12,7 mm	0-1/2“	silber	silver
KHN-FW-1/8	**HNX-SF-1/8**	3,2 mm	1/8“	0-12,7 mm	0-1/2“	kupfer	copper
KHN-FW-5/32	**HNX-SF-5/32**	4,0 mm	5/32“	0-12,7 mm	0-1/2“	schwarz	black
KHN-FW-3/16	**HNX-SF-3/16**	4,8 mm	3/16“	0-12,7 mm	0-1/2“	messing	brass
KHN-FW-7/32	**HNX-SF-7/32**	5,6 mm	7/32“	0-12,7 mm	0-1/2“	silber	silver
KHN-FW-1/4	**HNX-SF-1/4**	6,4 mm	1/4"	0-12,7 mm	0-1/2“	kupfer	copper
KHN-FW-5/16	**HNX-SF-5/16**	7,9 mm	5/16“	0-12,7 mm	0-1/2“	schwarz	black
KHNL-FW-3/32	**HNXL-SF-3/32**	2,4 mm	3/32“	0-25,4 mm	0-1“	silber	silver
KHNL-FW-1/8	**HNXL-SF-1/8**	3,2 mm	1/8“	0-25,4 mm	0-1“	kupfer	copper
KHNL-FW-5/32	**HNXL-SF-5/32**	4,0 mm	5/32“	0-25,4 mm	0-1“	schwarz	black
KHNL-FW-3/16	**HNXL-SF-3/16**	4,8 mm	3/16“	0-25,4 mm	0-1“	messing	brass
KHNL-FW-7/32	**HNXL-SF-7/32**	5,6 mm	7/32“	0-25,4 mm	0-1“	silber	silver
KHNL-FW-1/4	**HNXL-SF-1/4**	6,4 mm	1/4“	0-25,4 mm	0-1“	kupfer	copper
KHNL-FW-5/16	**HNXL-SF-5/16**	7,9 mm	5/16“	0-25,4 mm	0-1“	schwarz	black
KHNEL-FW-3/32	**HNXEL-SF-3/32**	2,4 mm	3/32“	12,7-38,1 mm	1/2-1.1/2“	silber	silver
KHNEL-FW-1/8	**HNXEL-SF-1/8**	3,2 mm	1/8“	12,7-38,1 mm	1/2-1.1/2“	kupfer	copper
KHNEL-FW-5/32	**HNXEL-SF-5/32**	4,0 mm	5/32“	12,7-38,1 mm	1/2-1.1/2“	schwarz	black
KHNEL-FW-3/16	**HNXEL-SF-3/16**	4,8 mm	3/16“	12,7-38,1 mm	1/2-1.1/2“	messing	brass
KHNEL-FW-1/4	**HNXEL-SF-1/4**	6,4 mm	1/4“	12,7-38,1 mm	1/2-1.1/2“	kupfer	copper
KHNEL-FW-5/16	**HNXEL-SF-5/16**	7,9 mm	5/16“	12,7-38,1 mm	1/2-1.1/2“	schwarz	black
KHNK-FW-1/8	**HNXK-SF-1/8**	3,2 mm	1/8“	38,1-63,5 mm	1.1/2-2.1/2“	kupfer	copper
KHNK-FW-5/32	**HNXK-SF-5/32**	4,0 mm	5/32“	38,1-63,5 mm	1.1/2-2.1/2“	schwarz	black
KHNK-FW-3/16	**HNXK-SF-3/16**	4,8 mm	3/16“	38,1-63,5 mm	1.1/2-2.1/2“	messing	brass
KHNK-FW-1/4	**HNXK-SF-1/4**	6,4 mm	1/4"	38,1-63,5 mm	1.1/2-2.1/2“	kupfer	copper
KHNK-FW-5/16	**HNXK-SF-5/16**	7,9 mm	5/16“	38,1-63,5 mm	1.1/2-2.1/2“	schwarz	black

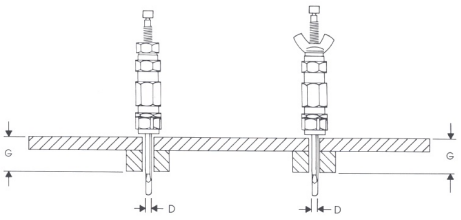

PART NUMBER EXAMPLE:
K HN S – FW – 3/32

- **Hole Size (D)**
- **FW – Free Wheeling**
- **Length S, L, EL, K (G)**
- **HN = Hex Nut, WN = Wing Nut**
- **Kwik-Lok**



KNR2000

Pneumatic Installation & Removal Tool for Hex-Body Fasteners

Features:

- Lightweight, with a small nosepiece to allow easy accessibility where fasteners are close together
- Fingertip reverse switch
- 35 in. lb. maximum torque providing clamping force up to 360 lbs.



Schraubheftnadeln, mit Flügelmutter
FASTENERS, WING NUT TYPE

Art.Nr./PART NO.		**Durchmesser** (D)	DIAMETER (D)	**Spannber.** (G)	GRIP (G)	**Farbe**	COLOR
WING NUT PART NO.	**CROSS REF. EQUIVALENT**						
KWN-FW-3/32	**WNX-3/32**	2,4 mm	3/32“	0-12,7 mm	0-1/2“	silber	silver
KWN-FW-1/8	**WNX-1/8**	3,2 mm	1/8“	0-12,7 mm	0-1/2“	kupfer	copper
KWN-FW-5/32	**WNX-5/32**	4,0 mm	5/32“	0-12,7 mm	0-1/2“	schwarz	black
KWN-FW-3/16	**WNX-3/16**	4,8 mm	3/16“	0-12,7 mm	0-1/2“	messing	brass
KWN-FW-7/32	**WNX-7/32**	5,6 mm	7/32“	0-12,7 mm	0-1/2“	silber	silver
KWN-FW-1/4	**WNX-1/4**	6,4 mm	1/4“	0-12,7 mm	0-1/2“	kupfer	copper
KWN-FW-5/16	**WNX-5/16**	7,9 mm	5/16“	0-12,7 mm	0-1/2“	schwarz	black
KWNL-FW-3/32	**WNXL-3/32**	2,4 mm	3/32“	0-25,4 mm	0-1“	silber	silver
KWNL-FW-1/8	**WNXL-1/8**	3,2 mm	1/8“	0-25,4 mm	0-1“	kupfer	copper
KWNL-FW-5/32	**WNXL-5/32**	4,0 mm	5/32“	0-25,4 mm	0-1“	schwarz	black
KWNL-FW-3/16	**WNXL-3/16**	4,8 mm	3/16“	0-25,4 mm	0-1“	messing	brass
KWNL-FW-7/32	**WNXL-7/32**	5,6 mm	7/32“	0-25,4 mm	0-1“	silber	silver
KWNL-FW-1/4	**WNXL-1/4**	6,4 mm	1/4"	0-25,4 mm	0-1“	kupfer	copper
KWNL-FW-5/16	**WNXL-5/16**	7,9 mm	5/16“	0-25,4 mm	0-1“	schwarz	black
KWNEL-FW-3/32	**WNXEL-3/32**	2,4 mm	3/32“	12,7-38,1 mm	1/2-1.1/2“	silber	silver
KWNEL-FW-1/8	**WNXEL-1/8**	3,2 mm	1/8“	12,7-38,1 mm	1/2-1.1/2“	kupfer	copper
KWNEL-FW-5/32	**WNXEL-5/32**	4,0 mm	5/32“	12,7-38,1 mm	1/2-1.1/2“	schwarz	black
KWNEL-FW-3/16	**WNXEL-3/16**	4,8 mm	3/16“	12,7-38,1 mm	1/2-1.1/2“	messing	brass
KWNEL-FW-1/4	**WNXEL-1/4**	6,4 mm	1/4“	12,7-38,1 mm	1/2-1.1/2“	kupfer	copper
KWNEL-FW-5/16	**WNXEL-5/16**	7,9 mm	5/16“	12,7-38,1 mm	1/2-1.1/2“	schwarz	black
KWNK-FW-1/8	**WNXK-1/8**	3,2 mm	1/8“	38,1-63,5 mm	1.1/2-2.1/2“	kupfer	copper
KWNK-FW-5/32	**WNXK-5/32**	4,0 mm	5/32“	38,1-63,5 mm	1.1/2-2.1/2“	schwarz	black
KWNK-FW-3/16	**WNXK-3/16**	4,8 mm	3/16“	38,1-63,5 mm	1.1/2-2.1/2“	messing	brass
KWNK-FW-1/4	**WNXK-1/4**	6,4 mm	1/4"	38,1-63,5 mm	1.1/2-2.1/2“	kupfer	copper
KWNK-FW-5/16	**WNXK-5/16**	7,9 mm	5/16“	38,1-63,5 mm	1.1/2-2.1/2“	schwarz	black

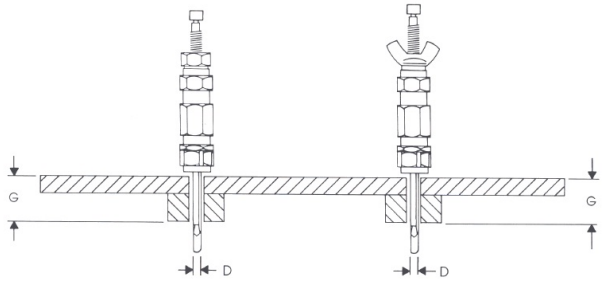

PART NUMBER EXAMPLE:
K WN S – FW – 3/32

- ***Hole Size***
- ***FW – Free Wheeling***
- ***Length S, L, EL, K***
- ***HN = Hex Nut, WN = Wing Nut***
- ***Kwik-Lok***



Schraubheftnadel, Zylindrisch
CYLINDRICAL BODY FASTENERS - **STANDARD**

Art.Nr./PART NO.	**DIAMETER**	**GRIP RANGE**	**BODY LENGTH**		**COLOR**
			OVERALL (inches)	**INSTALLED** (inches)	
CBX-BF-3/32	3/32”	0-1/2“	4-1/32	3-23/64	zinc
CBX-BF-1/8	1/8”	0-1/2“	4-1/16	3-23/64	copper
CBX-BF-5/32	5/32”	0-1/2“	4-3/32	3-23/64	black
CBX-BF-3/16	3/16“	0-1/2“	4-1/8	3-23/64	brass
CBX-BF-7/32	7/32“	0-1/2“	4-9/64	3-23/64	zinc
CBX-BF-1/4	1/4"	0-1/2“	4-5/32	3-23/64	copper
CBX-BF-9/32	9/32“	0-1/2“	4-5/32	3-23/64	brass
CBX-BF-5/16	5/16“	0-1/2“	4-5/32	3-23/64	black
CBX-BF-3/8	3/8“	0-1/2“	4-1/4	3-23/64	black & brass cap
CBXL-BF-3/32	3/32”	0-1”	5-1/32	4-23/64	zinc
CBXL-BF-1/8	1/8”	0-1”	5-1/16	4-23/64	copper
CBXL-BF-5/32	5/32”	0-1”	5-3/32	4-23/64	black
CBXL-BF-3/16	3/16“	0-1”	5-1/8	4-23/64	brass
CBXL-BF-7/32	7/32“	0-1”	5-9/64	4-23/64	zinc
CBXL-BF-1/4	1/4"	0-1”	5-5/32	4-23/64	cooper
CBXL-BF-9/32	9/32“	0-1”	5-5/32	4-23/64	brass
CBXL-BF-5/16	5/16“	0-1”	5-5/32	4-23/64	black
CBXL-BF-3/8	3/8“	0-1”	5-1/4	4-23/64	black & brass cap
CBXEL-BF-3/32	3/32”	1/2-1.1/2”	5-17/32	4-23/64	zinc
CBXEL-BF-1/8	1/8”	1/2-1.1/2”	5-9/16	4-23/64	copper
CBXEL-BF-5/32	5/32”	1/2-1.1/2”	5-9/16	4-23/64	black
CBXEL-BF-3/16	3/16“	1/2-1.1/2”	5-5/8	4-23/64	brass
CBXEL-BF-7/32	7/32“	1/2-1.1/2”	5-41/64	4-23/64	zinc
CBXEL-BF-1/4	1/4"	1/2-1.1/2”	5-21/32	4-23/64	copper
CBXEL-BF-9/32	9/32“	1/2-1.1/2”	5-21/32	4-23/64	brass
CBXEL-BF-5/16	5/16“	1/2-1.1/2”	5-21/32	4-23/64	black
CBXEL-BF-3/8	3/8“	1/2-1.1/2”	5-3/4	4-23/64	black & brass cap
CBXK-BF-1/8	1/8”	1.1/2-2.1/2”	6-9/16	4-23/64	copper
CBXK-BF-5/32	5/32”	1.1/2-2.1/2”	6-5/8	4-23/64	black
CBXK-BF-3/16	3/16“	1.1/2-2.1/2”	6-5/8	4-23/64	brass
CBXK-BF-7/32	7/32“	1.1/2-2.1/2”	6-41/64	4-23/64	zinc
CBXK-BF-1/4	1/4"	1.1/2-2.1/2”	6-21/32	4-23/64	copper
CBXK-BF-9/32	9/32“	1.1/2-2.1/2”	6-21/32	4-23/64	brass
CBXK-BF-5/16	5/16“	1.1/2-2.1/2”	6-21/32	4-23/64	black
CBXK-BF-3/8	3/8“	1.1/2-2.1/2”	6-3/4	4-23/64	black & brass cap

Installation & Removal Tools



ATI800FG

- torque 25 in/lbs
- Heavy Duty, Lightweight, and Compact
- Push button rapid reverse with lock position
- Quick to insert and remove cylindrical body fasteners
- Greater torque in reverse ensures removal of installed fasteners



KCB2000-MK

- max. torque 35 in/lbs (Adjustable 9-35 in/lbs)
- Heavy duty, yet light weight
- Reversible motor with finger tip control for switching to reverse
- Greater torque in reverse for those difficult removals



Schraubheftnadel, Zylindrisch, mit Nachspannfeder
CYLINDRICAL BODY FASTENERS – **SPRING LOADED**

Art.Nr./PART NO.	**DIAMETER**	**GRIP RANGE**	**BODY LENGTH**		**COLOR**
			OVERALL (inches)	**INSTALLED** (inches)	
CSX-BF-3/32	3/32"	0-1/2"	4-17/32	3-27/32	zinc
CSX-BF-1/8	1/8"	0-1/2"	4-9/16	3-27/32	copper
CSX-BF-5/32	5/32"	0-1/2"	4-19/32	3-27/32	black
CSX-BF-3/16	3/16"	0-1/2"	4-5/8	3-27/32	brass
CSX-BF-7/32	7/32"	0-1/2"	4-39/64	3-27/32	zinc
CSX-BF-1/4	1/4"	0-1/2"	4-21/32	3-27/32	copper
CSX-BF-9/32	9/32"	0-1/2"	4-21/32	3-27/32	brass
CSX-BF-5/16	5/16"	0-1/2"	4-21/32	3-27/32	black
CSX-BF-3/8	3/8"	0-1/2"	4-3/4	3-7/8	black & brass cap
CSXL-BF-3/32	3/32"	1/2-1"	5-1/32	3-27/32	zinc
CSXL-BF-1/8	1/8"	1/2-1"	5-1/16	3-27/32	copper
CSXL-BF-5/32	5/32"	1/2-1"	5-3/32	3-27/32	black
CSXL-BF-3/16	3/16"	1/2-1"	5-1/8	3-27/32	brass
CSXL-BF-7/32	7/32"	1/2-1"	5-7/64	3-27/32	zinc
CSXL-BF-1/4	1/4"	1/2-1"	5-5/32	3-27/32	copper
CSXL-BF-9/32	9/32"	1/2-1"	5-5/32	3-27/32	brass
CSXL-BF-5/16	5/16"	1/2-1"	5-5/32	3-27/32	black
CSXL-BF-3/8	3/8"	1/2-1"	5-1/4	3-7/8	black & brass cap
CSXEL-BF-3/32	3/32"	1-1.1/2"	5-17/32	3-27/32	zinc
CSXEL-BF-1/8	1/8"	1-1.1/2"	5-9/16	3-27/32	copper
CSXEL-BF-5/32	5/32"	1-1.1/2"	5-19/32	3-27/32	black
CSXEL-BF-3/16	3/16"	1-1.1/2"	5-5/8	3-27/32	brass
CSXEL-BF-7/32	7/32"	1-1.1/2"	5-39/64	3-27/32	zinc
CSXEL-BF-1/4	1/4"	1-1.1/2"	5-21/32	3-27/32	copper
CSXEL-BF-9/32	9/32"	1-1.1/2"	5-21/32	3-27/32	brass
CSXEL-BF-5/16	5/16"	1-1.1/2"	5-21/32	3-27/32	black
CSXEL-BF-3/8	3/8"	1-1.1/2"	5-3/4	3-7/8	black & brass cap
CSXK-BF-1/8	1/8"	2-2.1/2"	6-9/16	3-27/32	copper
CSXK-BF-5/32	5/32"	2-2.1/2"	6-5/8	3-27/32	black
CSXK-BF-3/16	5/32"	2-2.1/2"	6-5/8	3-27/32	black
CSXK-BF-7/32	7/32"	2-2.1/2"	6-41/64	3-27/32	zinc
CSXK-BF-1/4	1/4"	2-2.1/2"	6-21/32	3-27/32	copper
CSXK-BF-9/32	9/32"	2-2.1/2"	6-21/32	3-27/32	brass
CSXK-BF-5/16	5/16"	2-2.1/2"	6-21/32	3-27/32	black
CSXK-BF-3/8	3/8"	2-2.1/2"	6-3/4	3-7/8	black & brass cap

Pneumatic Installation & Removal Tool



W500-30-931GB

Features:
- max. 3000 rpm
- max. torque 25 in/lbs
- incl. Guide Bushing
- incl. internal air flow control to adjust clamping force from 100 to 600 pounds.

Manual Installation & Removal Tool



CBHT-01

PART NUMBER EXAMPLE:
CBXEL-BF-1/8

- ***DIAMETER (Fractional or metric)***
- ***"BIG FOOT" TYPE CLAMP***
- ***GRIP (X, XL, XEL, XK)***
- ***BASIC PART NO. (CB = Standard)***
  (CS = Spring Loaded)

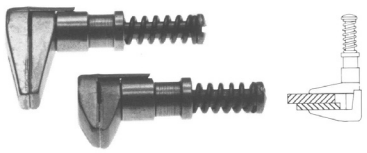

Blechklemmen, zangenbetätigt (verwenden Sie Zange TP-74)
SIDE GRIPS, PLIER OPERATED EDGE CLAMPS (USE PLIER P/N TP-74)

Art.Nr./PART NO.	**Materialstärke**	MATERIAL THICKNESS	**Klemmtiefe**	JAW DEPTH	**Farbe**	COLOR
KSG 1/2" x 1/2"	0-12,7 mm	1/2“	0-12,7 mm	0-1/2"	kupfer	copper
KSG 3/4" x 1/2"	0-19,0 mm	3/4"	0-12,7 mm	0-1/2"	messing	brass
KSG 1/2" x 1"	0-12,7 mm	1/2“	0-25,4 mm	0-1"	kupfer	copper
KSG 3/4" x 1"	0-19,0 mm	3/4"	0-25,4 mm	0-1"	messing	brass

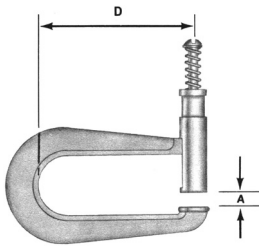

Blechklemmen, zangenbetätigt (verwenden Sie Zange TP-74)
SIDE GRIPS, PLIER OPERATED EDGE CLAMPS (USE PLIER P/N TP-74)

Art.Nr./PART NO.	Material of Clamp	**Materialstärke**	MATERIAL THICKNESS	**Klemmtiefe**	JAW DEPTH
542	Aluminum	0 - 9,5 mm	0" - 3/8"	max. 50 mm	2"
543	Aluminum	6,35 - 14,3 mm	1/4" - 9/16"	max. 75 mm	3"
542S	Steel	0 - 9,5 mm	0" - 3/8"	max. 50 mm	2"
543S	Steel	6,35 - 14,3 mm	1/4" - 9/16"	max. 75 mm	3"

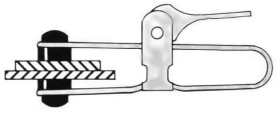

Blechklemmen, handbetätigt
HANDI-KLAMPS, HAND OPERATED

Art.Nr./PART NO.	**Materialstärke**	MATERIAL THICKNESS	**Klemmtiefe**	JAW DEPTH
K-1	0-7,94 mm	0-5/16"	25,4 mm	1"
K-2	0-7,94 mm	0-5/16"	38,1 mm	1.1/2"

Kniehebelspanner / TOGGLE PLIERS

KNU-VISE

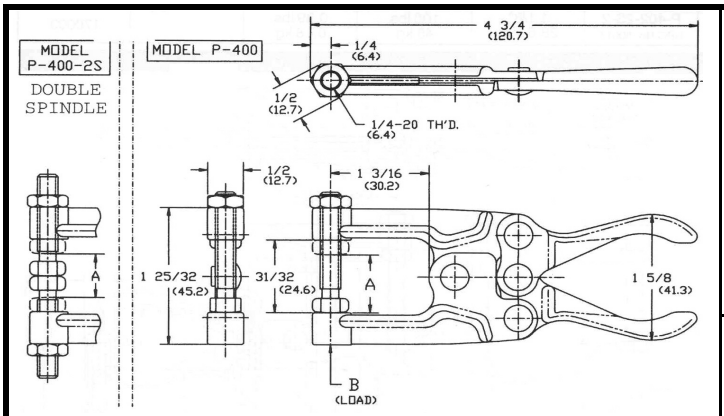

P-400-2S = **2 Spindeln, ohne Gummipuffer** / 2 Spindles without Rubber Pads

P-400-2S-1 = **2 Spindeln, mit 1 Gummipuffer** / 2 Spindles with 1 Rubber Pad

P-400-2S-2 = **2 Spindeln, mit 2 Gummipuffer** / 2 Spindles with 2 Rubber Pads

Typ-Nr. MODEL	**(A) Max. Materialstärke** MAX. CLAMP THICK. (A)	**Maximaldruck** LOAD	**Gewicht** WEIGHT
P-400	23/32" (18 mm)	400 Lbs (180 kg)	0.30 lbs. (0.14 kg)
P-400-2S	19/32" (15 mm)	400 Lbs (180 kg)	0.30 lbs. (0.14 kg)
P-400-1	9/16" (14 mm)	400 Lbs (180 kg)	0.30 lbs. (0.14 kg)
P-400-2S-1	7/16" (11 mm)	100 lbs. (45 kg)	0.30 lbs. (0.14 kg)
P-400-2	5/16" (8 mm)	100 lbs. (45 kg)	0.30 lbs. (0.14 kg)
P-400-2S-2	3/16" (4,8 mm)	100 lbs. (45 kg)	0.30 lbs. (0.14 kg)

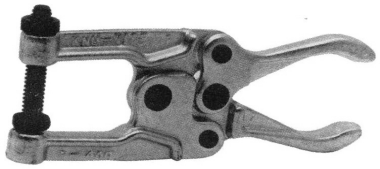

1 Spindel, ohne Gummipuffer / 1 Spindle without Rubber Pad

P-400



1 Spindel, mit Gummipuffer / 1 Spindle with Rubber Pad

P-400-1



1 Spindel, mit 2 Gummipuffer / 1 Spindle with 2 Rubber Pads

P-400-2

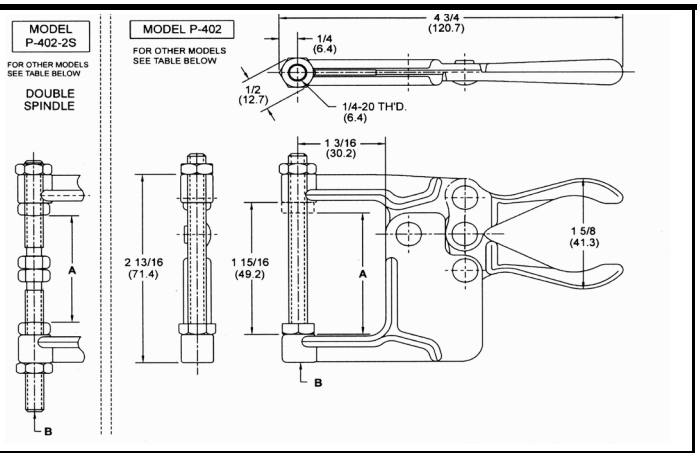

P-402-1 = **1 Spindel, mit 1 Gummipuffer** / 1 Spindles with 1 Rubber Pad

P-402-2S = **2 Spindeln, ohne Gummipuffer** / 2 Spindles without Rubber Pads

P-402-2S-2 = **2 Spindeln, mit 2 Gummipuffer** / 2 Spindles with 2 Rubber Pads

Typ-Nr. MODEL	**(A) Max. Materialstärke** MAX. CLAMP THICK. (A)	**Maximaldruck** LOAD	**Gewicht** WEIGHT
P-402	1.3/4" (45.5 mm)	400 Lbs (180 kg)	0.36 lbs. (0.16 kg)
P-402-1	1.1/2" (38.1 mm)	100 lbs. (45 kg)	0.36 lbs. (0.16 kg)
P-402-2S	1.1/2" (38.1 mm)	400 Lbs (180 kg)	0.38 lbs. (0.17 kg)
P-402-2S-2	1.1/8" (28.6 mm)	100 lbs. (45 kg)	0.39 lbs. (0.18 kg)

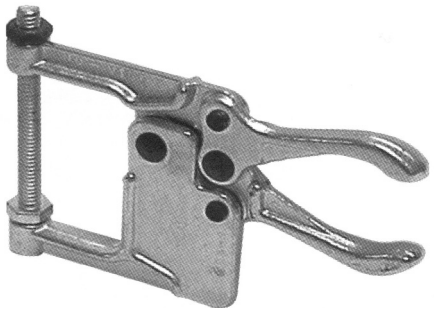

1 Spindel, ohne Gummipuffer / 1 Spindle without Rubber Pad

P-402

Kniehebelspanner / TOGGLE PLIERS

KNU-VISE

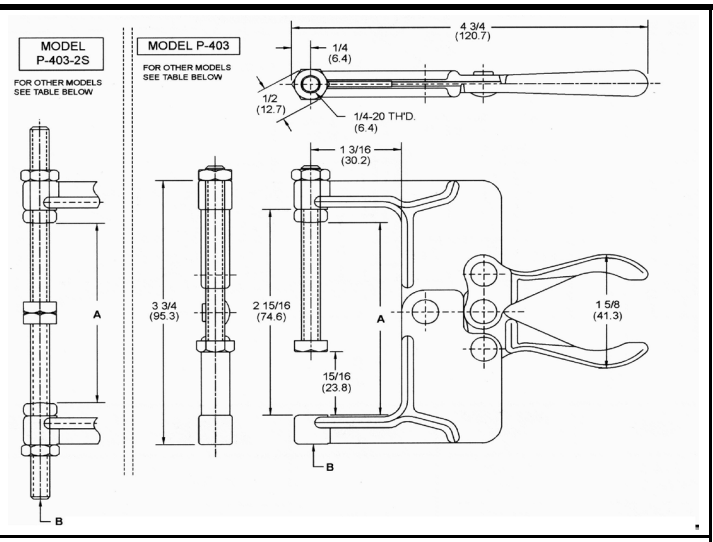

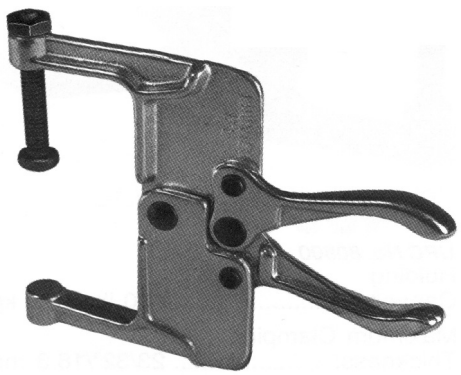

P-403-1 **= 1 Spindel, mit 1 Gummipuffer / 1 Spindles with 1 Rubber Pad**

P-403-2S **= 2 Spindeln, ohne Gummipuffer / 2 Spindles without Rubber Pads**

P-403-2S-2 = 2 Spindeln, mit 2 Gummipuffer / 2 Spindles with 2 Rubber Pads

1 Spindel, ohne Gummipuffer / 1 Spindle without Rubber Pad

P-403

Typ-Nr. MODEL	**(A) Max. Materialstärke** MAX. CLAMP THICK. (A)	**Maximaldruck** LOAD	**Gewicht** WEIGHT
P-403	2.3/4" (69.9 mm)	400 Lbs (180 kg)	0.42 lbs. (0.19 kg)
P-403-1	2.1/2" (63.5 mm)	100 lbs. (45 kg)	0.42 lbs. (0.19 kg)
P-403-2S	2.5/8" (66.7 mm)	400 Lbs (180 kg)	0.44 lbs. (0.20 kg)
P-403-2S-2	2.1/8" (54.0 mm)	100 lbs. (45 kg)	0.45 lbs. (0.20 kg)

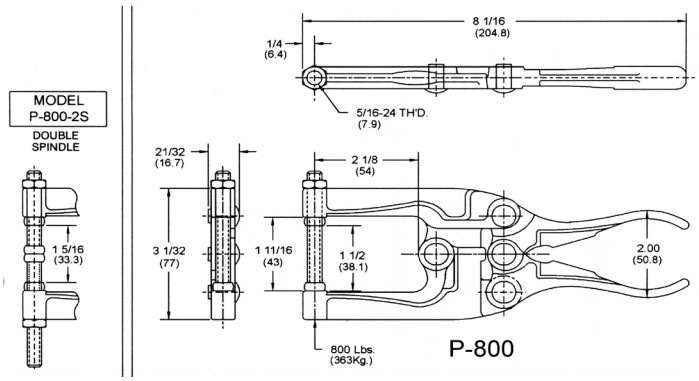



P-800 **= 1 Spindel, ohne Gummipuffer / 1 Spindle without Rubber Pad**

P-800-2S **= 2 Spindeln, ohne Gummipuffer** / 2 Spindles without Rubber Pads

P-800 *

* Auch mit Schnelllösehebel lieferbar !

* Also available with Quick Release Lever !

Typ/Mod.: **LUP-800 & LUP-800-2S**

Typ-Nr. MODEL	**(A) Max. Materialstärke** MAX. CLAMP THICK. (A)	**Maximaldruck** LOAD	**Gewicht** WEIGHT
P-800	1.1/2" (38.1 mm)	800 lbs. (362 kg)	1.06 lbs. (0.48 kg)
P-800-2S	1.5/16" (33.3 mm)	800 lbs. (362 kg)	1.06 lbs. (0.48 kg)

Kniehebelspanner / TOGGLE PLIERS

KNU-VISE

P-803

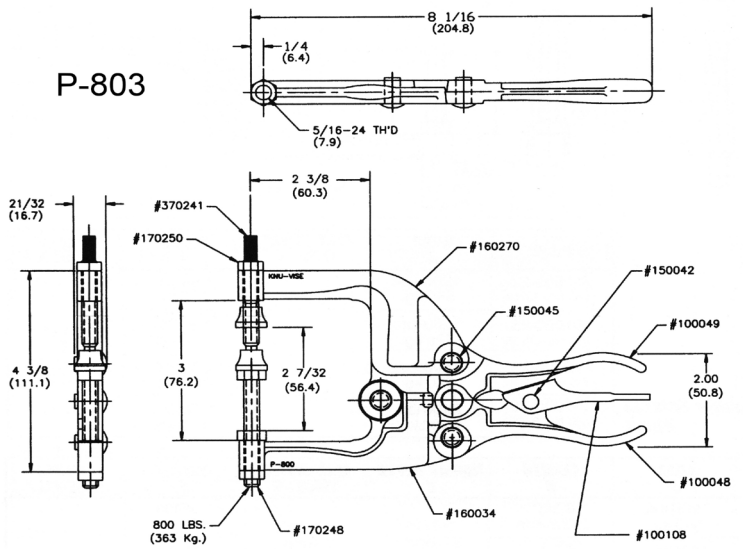

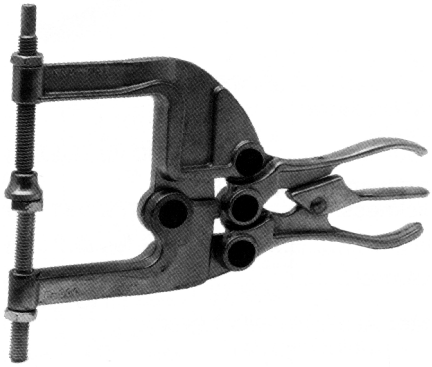

P-803 *

* Mit Schnelllösehebel und 1 Spindel mit Gelenkfuss

* Included Quick Release Lever and 1 Swivel Foot Spindle

Typ-Nr. MODEL	**(A) Max. Materialstärke** MAX. CLAMP THICK. (A)	**Maximaldruck** LOAD	**Gewicht** WEIGHT
P-803	2.7/32" (56.4 mm)	700 lbs. (318 kg)	1.28 lbs. (0.58 kg)

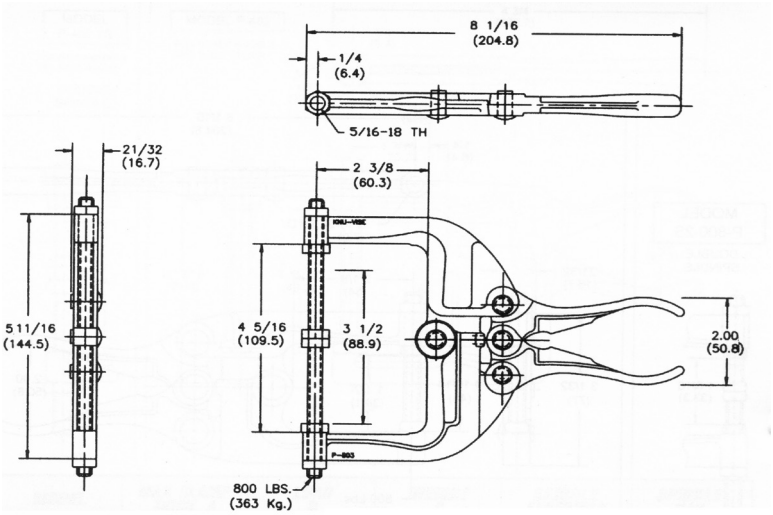

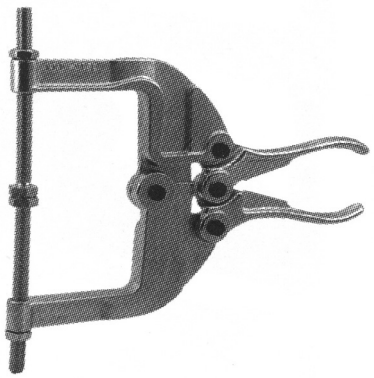

P-804 *
2 Spindeln, Sechskantkopf
2 Hex Head Spindles

* Auch mit Schnelllösehebel lieferbar !

* Also available with Quick Release Lever !

Typ/Mod.: **LUP-804**

Typ-Nr. MODEL	**(A) Max. Materialstärke** MAX. CLAMP THICK. (A)	**Maximaldruck** LOAD	**Gewicht** WEIGHT
P-804	3.1/2" (88.9 mm)	600 lbs. (272 kg)	1.36 lbs. (0.62 kg)

Kniehebelspanner / TOGGLE PLIERS

KNU-VISE

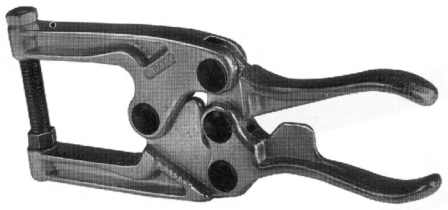

P-1200

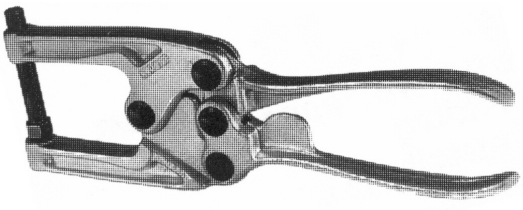

P-1600

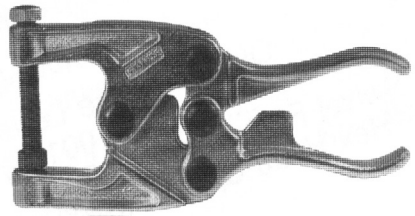

P-1800

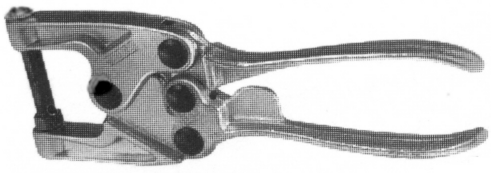

P-2400

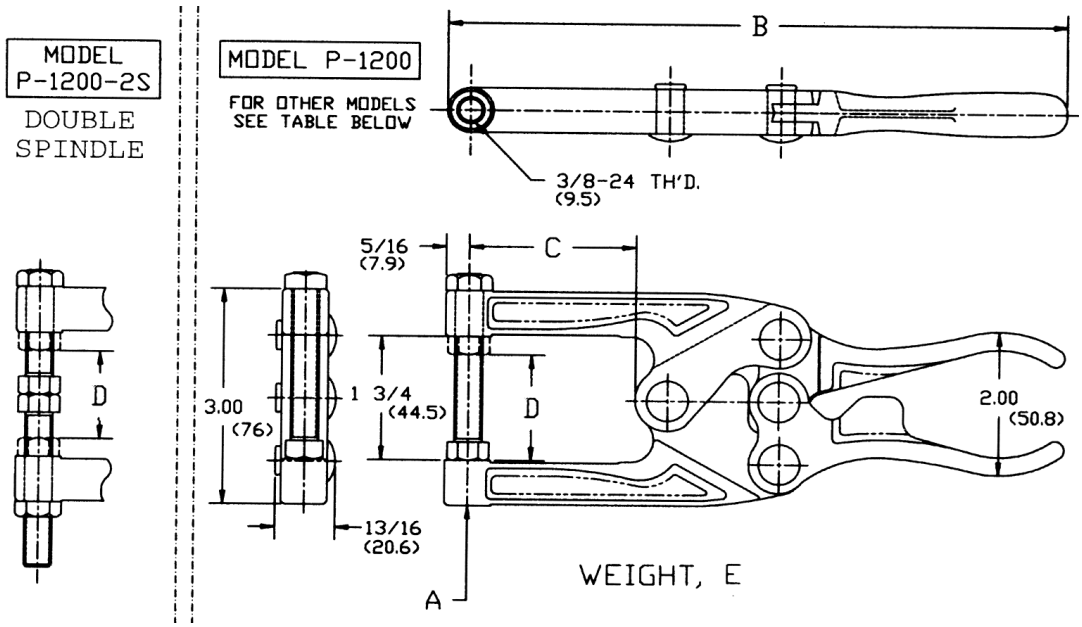

Typ-Nr. MODEL	A Maximaldruck LOAD	B Länge LENGTH	C Max. Klemmtiefe THROAT DEPTH	D Max. Materialstärke MAX. CLAMP THICK.	E Gewicht WEIGHT	Anzahl der Spindeln NO OF SPINDLES
P-1200	1200 lbs. (540 kg)	8.3/8" (212.7 mm)	2.1/4" (57.2 mm)	1.7/32" (31.0 mm)	1.56 lbs. (0.71 kg)	1
P-1600	1600 lbs. (725 kg)	9.3/4" (247.7 mm	2.1/4" (57.2 mm)	1.7/32" (31.0 mm)	1.64 lbs. (0.74 kg)	1
P-1800	1800 lbs. (820 kg)	7.3/8" (187.3 mm)	1.1/4" (31.8 mm)	1.1/4" (31.8 mm)	1.46 lbs. (0.66 kg)	1
P-2400	2400 lbs. (1100 kg)	8.3/4" (222.2 mm)	1.1/4" (31.8 mm)	1.1/4" (31.8 mm)	1.54 lbs. (0.70 kg)	1
P-1200-2S	1200 lbs. (540 kg)	8.3/8" (212.7 mm)	2.1/4" (57.2 mm)	1.1/32" (26.2 mm)	1.60 lbs. (0.73 kg)	2
P-1600-2S	1600 lbs. (725 kg)	9.3/4" (247.7 mm	2.1/4" (57.2 mm)	1.1/32" (26.2 mm)	1.68 lbs. (0.76 kg)	2
P-1800-2S	1800 lbs. (820 kg)	7.3/8" (187.3 mm)	1.1/4" (31.8 mm)	1.1/16" (27.0 mm)	1.50 lbs. (0.68 kg)	2
P-2400-2S	2400 lbs. (1100 kg)	8.3/4" (222.2 mm)	1.1/4" (31.8 mm)	1.1/16" (27.0 mm)	1.58 lbs. (0.73 kg)	2

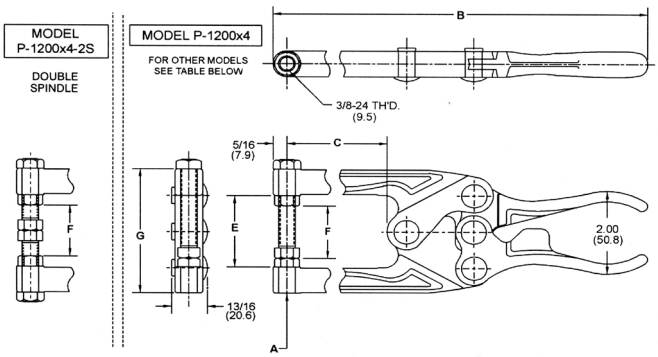



Typ-Nr. MODEL	A Maximal-druck LOAD	B Länge LENGTH	C Klemmtiefe THROAT DEPTH	D Gewicht WEIGHT	E Öffnungs-weite JAW OPENING	F Max. Material-stärke MAX. CLAMP THICK.	G Höhe HEIGHT	Min. Material-stärke MIN CLAMP THICK.	Spindel-Nr. SPINDLE NO.
Einfach-Spindel / SINGLE SPINDLE									
P-1200x4	600 lbs. 270 kg	10 7/16" 265 mm	4" 101.6 mm	2.01 lbs. .91 kg	1 3/4" 44.5 mm	1 7/32" 31 mm	3" 76 mm	0 0	370009
P-1203x4	600 lbs. 270 kg	10 7/16" 265 mm	4" 101.6 mm	2.31 lbs. 1.05 kg	3 17/32" 89.7 mm	2 13/16" 71.4 mm	5" 127 mm	1 19/32" 40.5 mm	370009
P-1204x4	600 lbs. 270 kg	10 7/16" 265 mm	4" 101.6 mm	2.41 lbs. 11.09 kg	4 17/32" 115 mm	3 13/16" 96.8 mm	6" 152.4 mm	3 19/32" 91.3 mm	370009
P-1206x4	600 lbs. 270 kg	10 7/16" 265 mm	4" 101.6 mm	2.60 lbs. 1.18 kg	6 17/32" 166 mm	5 13/16" 147.6 mm	8" 203.2 mm	5 19/32" 142.1 mm	370009
P-1200x6	400 lbs. 180 kg	12 7/16" 316 mm	6" 152.4 mm	2.48 lbs. 1.13 kg	1 3/4" 44.5 mm	1 7/32" 31 mm	3" 76 mm	0 0	370009
P-1203x6	400 lbs. 180 kg	12 7/16" 316 mm	6" 152.4 mm	2.78 lbs. 1.26 kg	3 17/32" 89.7 mm	2 13/16" 71.4 mm	5" 127 mm	1 19/32" 40.5 mm	370009
P-1204x6	400 lbs. 180 kg	12 7/16" 316 mm	6" 152.4 mm	2.88 lbs. 1.31 kg	4 17/32" 115 mm	3 13/16" 96.8 mm	6" 152.4 mm	3 19/32" 91.3 mm	370009
P-1206x6	400 lbs. 180 kg	12 7/16" 316 mm	6" 152.4 mm	3,07 lbs. 1.39kg	6 17/32" 166 mm	5 13/16" 147.6 mm	8" 203.2 mm	5 19/32" 142.1 mm	370009
P-1200x8	300 lbs. 135 kg	14 7/16" 367 mm	8" 203.2 mm	2.94 lbs. 1.33 kg	1 3/4" 44.5 mm	1 7/32" 31 mm	3" 76 mm	0 0	370009
P-1203x8	300 lbs. 135 kg	14 7/16" 367 mm	8" 203.2 mm	3.24 lbs. 1.47 kg	3 17/32" 89.7 mm	2 13/16" 71.4 mm	5" 127 mm	1 19/32" 40.5 mm	370009
P-1204x8	300 lbs. 135 kg	14 7/16" 367 mm	8" 203.2 mm	3.34 lbs. 1.52 kg	4 17/32" 115 mm	3 13/16" 96.8 mm	6" 152.4 mm	3 19/32" 91.3 mm	370009
P-1206x8	300 lbs. 135 kg	14 7/16" 367 mm	8" 203.2 mm	3.53 lbs. 1.60 kg	6 17/32" 166 mm	5 13/16" 147.6 mm	8" 203.2 mm	5 19/32" 142.1 mm	370009
Doppel Spindel / DOUBLE SPINDLE									
P-1200x4-2S	600 lbs. 270 kg	10 7/16" 265 mm	4" 101.6 mm	2.05 LBS. 0.93 KG.	1 3/4" 44.5 mm		3" 76 mm		370009 & 370051
P-1203x4-2S	600 lbs. 270 kg	10 7/16" 265 mm	4" 101.6 mm	2.41 LBS. 1.09 KG.	3 17/32" 89.7 mm		5" 127 mm		370009 & 370028
P-1204x4-2S	600 lbs. 270 kg	10 7/16" 265 mm	4" 101.6 mm	2.65 LBS. 1.203 KG.	4 17/32" 115 mm		6" 152.4 mm		370029 & 370052
P-1206x4-2S	600 lbs. 270 kg	10 7/16" 265 mm	4" 101.6 mm	2.70 LBS. 1.19 KG.	6 17/32" 166 mm		8" 203.2 mm		370028 & 370030
P-1200x6-2S	400 lbs. 180 kg	12 7116" 316 mm	6" 152.4 mm	2.52 LBS. 1.4 KG.	1 3/4" 44.5 mm		3" 76 mm		370009 & 370051
P-1203x6-2S	400 lbs. 180 kg	12 7/16" 316 mm	6" 152.4 mm	2.88 LBS. 1.31 KG.	3 17/32" 89.7 mm		5" 127 mm		370009 & 370028
P-1204x6-2S	400 lbs. 180 kg	12 7/16" 316 mm	6" 152.4 mm	3.12 LBS. 1.42 KG.	4 17/32" 115 mm		6" 152.4 mm		370029 & 370052
P-1206x6-2S	400 lbs. 180 kg	12 7/16" 316 mm	6" 152.4 mm	3.17 LBS. 1.44 KG.	6 17/32" 166 mm		8" 203.2 mm		370028 & 370030
P-1200x8-2S	300 lbs. 135 kg	14 7/16" 367 mm	8" 203.2 mm	2.98 lbs. 1.35 kg	1 3/4" 44.5 mm		3" 76 mm		370009 & 370051
P-1203x8-2S	300 lbs. 135 kg	14 7/16" 367 mm	8" 203.2 mm	3.34 lbs. 1.52 kg	3 17/32" 89.7 mm		5" 127 mm		370009 & 370028
P-1204x8-2S	300 lbs. 135 kg	14 7/16" 367 mm	8" 203.2 mm	3.58 lbs. 1.63 kg	4 17/32" 115 mm		6" 152.4 mm		370029 & 370052
P-1206x8-2S	300 lbs. 135 kg	14 7/16" 367 mm	8" 203.2 mm	3.63 lbs. 1.65 kg	6 17/32" 166 mm		8" 203.2 mm		370028 & 370030
Einfach-Spindel, volle Länge / FULL LENGTH SINGLE SPINDLE									
P-1203x4-L	600 lbs. 270 kg	10 7/16" 265 mm	4" 101.6 mm	2.35 lbs. 1.07 kg	3 17/32" 89.7 mm		5" 127 mm	0 0	370028
P-1204x4-L	600 lbs. 270 kg	10 7/16" 265 mm	4" 101.6 mm	2.48 lbs. 1.13 kg	4 17/32" 115 mm		6" 152.4 mm	0 0	370029
P-1206x4-L	600 lbs. 270 kg	10 7/16" 265 mm	4" 101.6 mm	2.72 lbs. 1.23 kg	6 17/32" 166 mm		8" 203.2 mm	0 0	370030
P-1203x6-L	400 lbs. 180 kg	12 7/16" 316 mm	6" 152.4 mm	2.92 lbs. 1.33 kg	3 17/32" 89.7 mm		5" 127 mm	0 0	370028
P-1204x6-L	400 lbs. 180 kg	12 7/16" 316 mm	6" 152.4 mm	2.95 lbs. 1.34 kg	4 17/32" 115 mm		6" 152.4 mm	0 0	370029
P-1206x6-L	400 lbs. 180 kg	12 7/16" 316 mm	6" 152.4 mm	3.19 lbs. 1.45 kg	6 17/32" 166 mm		8" 203.2 mm	0 0	370030
P-1203x8-L	300 lbs. 135 kg	14 7/16" 367 mm	8" 203.2 mm	3.28 lbs. 1.49 kg	3 17/32" 89.7 mm		5" 127 mm	0 0	370028
P-1204x8-L	300 lbs. 135 kg	14 7/16" 367 mm	8" 203.2 mm	3.41 lbs. 1.55 kg	4 17/32" 115 mm		6" 152.4 mm	0 0	370029
P-1206x8-L	300 lbs. 135 kg	14 7/16" 367 mm	8" 203.2 mm	3.65 lbs. 1.66 kg	6 17/32" 166 mm		8" 203.2 mm	0 0	370030

KNU-VISE

FGP-400

Mit Druckfeder

Gewicht	0,14 kg
Federkraft	4,5-20 kg
Inklusive	Federspindel

Spring Loaded

Weight	0.31 lbs.
Spring Load	10-45 lbs.
Included	Spring Assembly

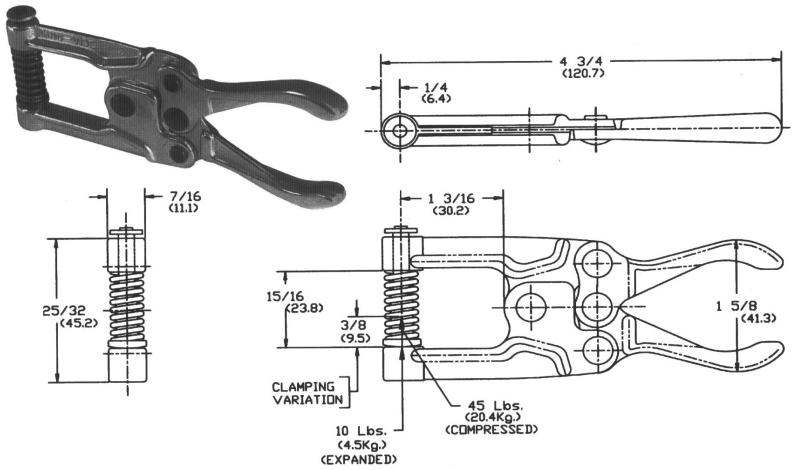

FGP-1200

Mit Druckfeder

Gewicht	0,73 kg
Federkraft	30-57 kg
Inklusive	Federspindel

Spring Loaded

Weight	1,60 lbs.
Spring Load	65-125 lbs.
Included	Spring Assembly

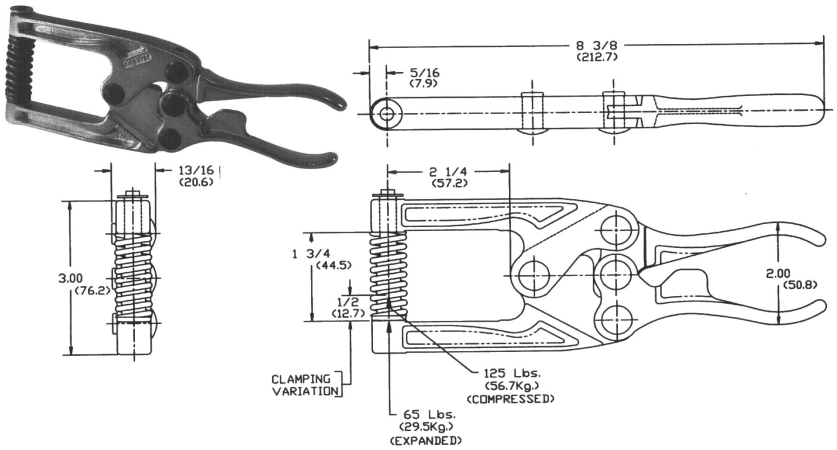

HLP-400

Mit Führungszapfen

Gewicht	0,15 kg
Spannkraft	180 kg

Hole Location

Weight	1,60 lbs.
Holding Cap.	65-125 lbs.

Bitte angeben: Zapfen & Lochdurchmesser
Please specify: Pilot & Hole Size

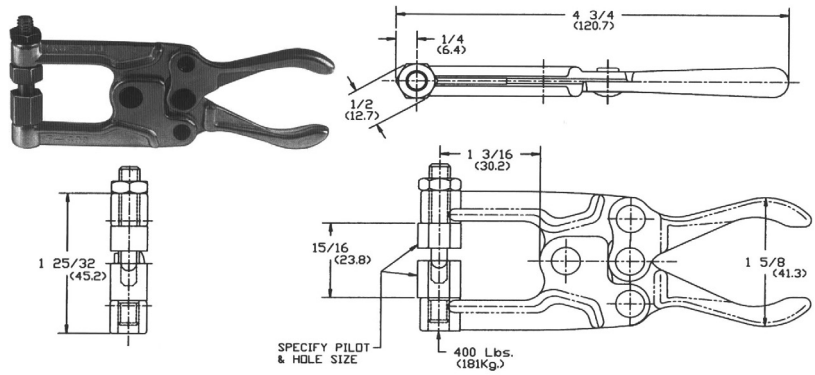

HLP-1200

Mit Führungszapfen

Gewicht	0,78 kg
Spannkraft	540 kg

Hole Location

Weight	1,72 lbs.
Holding Cap.	1200 lbs.

Bitte angeben: Zapfen & Lochdurchmesser
Please specify: Pilot & Hole Size

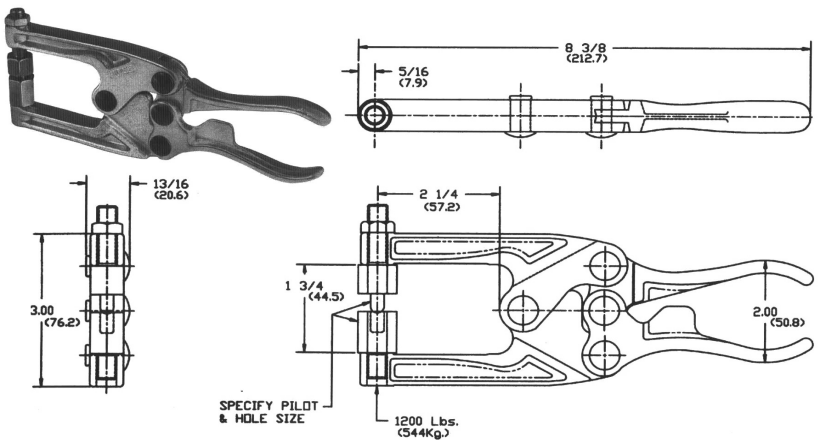

Kniehebel-Spanner / TOGGLE-PLIERS

Destaco

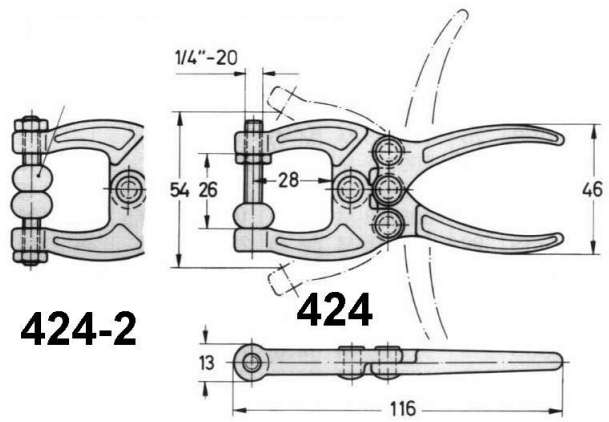

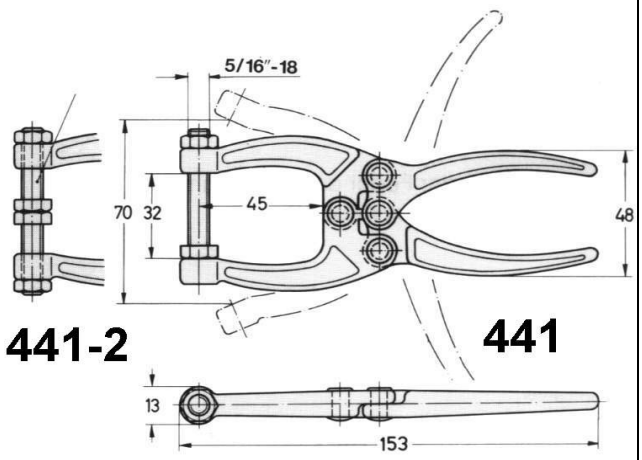

Art.Nr. Part No.	Beschreibung	Description	Haltekraft / Holding Pressure	Gewicht / Weight
424	1 Spindel	1 Spindle	90 daN	0,20 kg / 0,44 lbs.
424-2	2 Spindeln	2 Spindles	90 daN	0,20 kg / 0,44 lbs.
441	1 Spindel	1 Spindle	150 daN	0,25 kg / 0,55 lbs.
441-2	2 Spindeln	2 Spindles	150 daN	0,25 kg / 0,55 lbs.

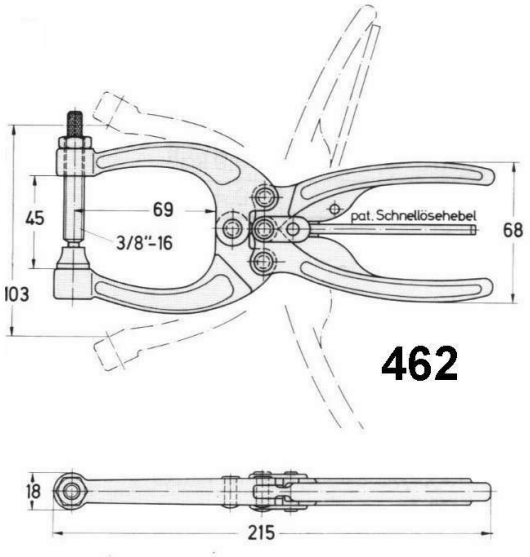

Art.Nr. Part No.	Beschreibung	Description	Haltekraft Holding Pressure	Gewicht / Weight
462	1 Spindel mit Gelenkfuß	1 Spindle with Swivel Foot	320 daN	0,60 kg / 1,33 lbs.

KNU-VISE
DESTACO
GOOD HAND

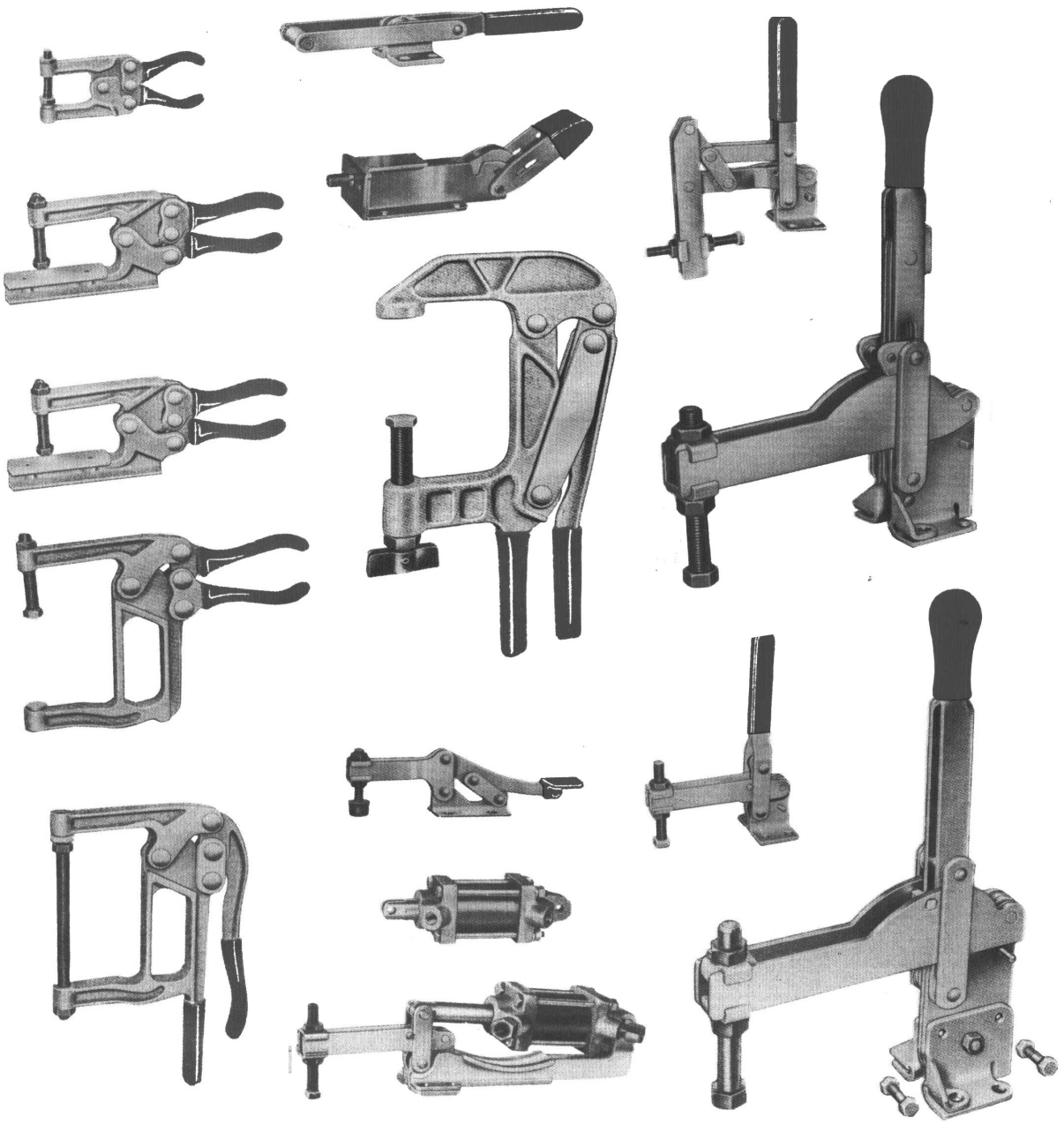

Andere Typen und Abmessungen können auf Anfrage angeboten werden

Other types and dimensions are available on request

Stationäre Niet- und Dimpel-Maschinen
Stationary Riveting & Dimpling Machines

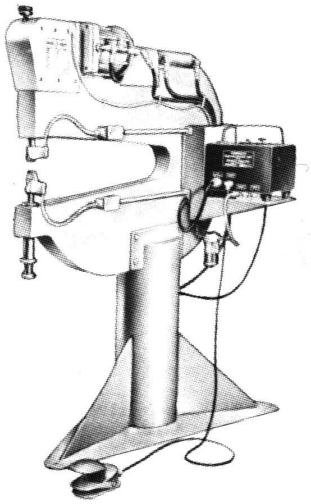

AT 256SS
STATIONARY DIMPLING MACHINE

AT 257JAF
TERMO DIMPLE GUN
USED WITH AT 249P

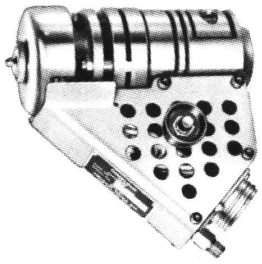

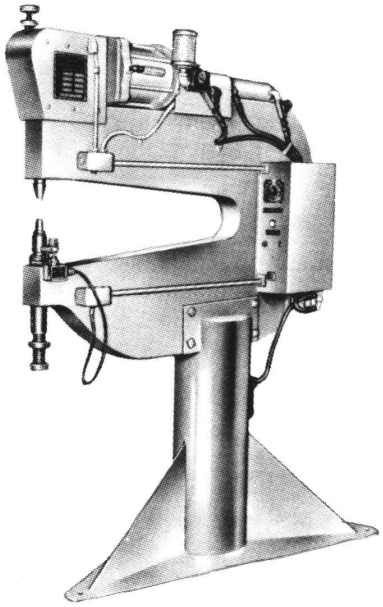

STATIONARY RIVETING MACHINE

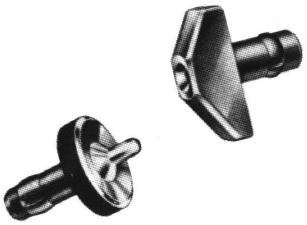

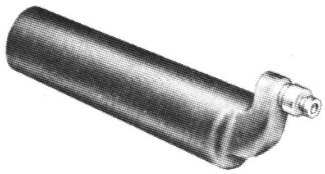

AT 244 LB DOLLY BAR

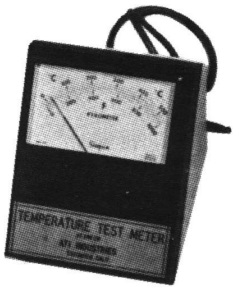

AT 246TM TEST METER



AT 249P
THERMOMATIC DIMPLING CONTROL UNIT
WITH SOLID STATE
TEMPERATURE CONTROLS

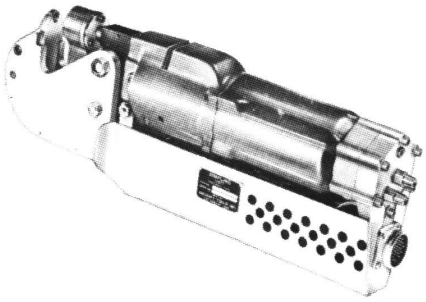

AT 259 SERIES
PORTABLE HOT DIMPLING SQUEEZER
USED WITH AT 249P

Weitere Informationen erhalten Sie auf Anfrage
More Information on request



Mod. 100B



Mod. 400

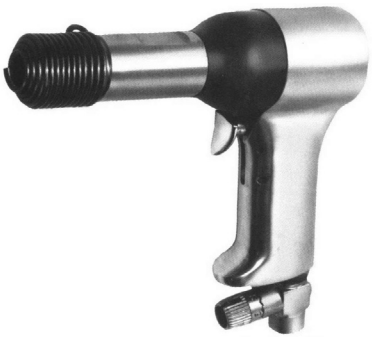

Mod. 3X

Niethämmer, für Döpper mit kurzem Schaft 10,2 x 12,7 RIVET HAMMERS, FOR RIVET SETS WITH SHORT SHANK .401 X .50 INCH								
Art.Nr./Part No.	**Max. Nietleistung / Rated Rivet Capacity**				**Länge / Length**		**Gewicht / Weight**	
	Stahl	Aluminium	Steel	Aluminum	mm	Inches	Kg.	Lbs.
100-B	3,2 mm	3,2 mm	1/8"	1/8"	95	3.3/4"	1,0	2.1/4
200-B	4,0 mm	4,8 mm	5/32"	3/16"	108	4.1/4"	1,2	2.5/8

Niethämmer, für Döpper mit Schaft 10,2 x 30 / 40,3 mm (Parker Taper) RIVET HAMMERS, FOR RIVET SETS WITH **PARKER TAPER** SHANK .401 X 1.164 / 1.11/16"								
Art.Nr./Part No.	**Max. Nietleistung / Rated Rivet Capacity**				**Länge / Length**		**Gewicht / Weight**	
	Stahl	Aluminium	Steel	Aluminum	mm	Inches	Kg.	Lbs.
200	4,0 mm	4,8 mm	5/32"	3/16"	136	5.3/8"	1,4	3.1/8
300	4,8 mm	6,4 mm	3/16"	1/4"	168	6.5/8"	1,6	3.1/2
400	6,4 mm	9,5 mm	1/4"	3/8"	191	7.1/2"	1,65	3.5/8

Niethämmer, für Döpper mit Schaft 12,6 x 30 / 40,3 mm (Parker Taper) RIVET HAMMERS, FOR RIVET SETS WITH **PARKER TAPER** SHANK .498 X 1.164 / 1.11/16"								
Art.Nr./Part No.	**Max. Nietleistung / Rated Rivet Capacity**				**Länge / Length**		**Gewicht / Weight**	
	Stahl	Aluminium	Steel	Aluminum	mm	Inches	Kg.	Lbs.
600	8,0 mm	9,5 mm	5/16"	3/8"	241	9.1/2"	3,3	7.1/4
800	9,5 mm	11,1 mm	3/8"	7/16"	305	12"	3,9	8.3/4

Niethämmer, für Döpper mit Schaft 10,2 x 30 / 40,3 mm (Parker Taper) RIVET HAMMERS, FOR RIVET SETS WITH **PARKER TAPER** SHANK .401 X 1.164 / 1.11/16"								
Art.Nr./Part No.	**Max. Nietleistung / Rated Rivet Capacity**				**Länge / Length**		**Gewicht / Weight**	
	Stahl	Aluminium	Steel	Aluminum	mm	Inches	Kg.	Lbs.
2-X	2,4 mm	3,2 mm	3/32"	1/8"	170	6.11/16"	1,0	2.1/4
3-X	4,0 mm	4,8 mm	5/32"	3/16"	189	7.5/16"	1,50	2.5/16
4-X	4,8 mm	6,4 mm	3/16"	1/4"	211	8.5/16"	1,25	2.3/4



114C-3

Schnellwechsel-Rückholfeder
Quick Change Retainer Spring



115A + 115B

Rückholfeder
Retainer Spring Beehive Type



J-985

Schnellwechsel-Rückholfeder
Quick Change Retainer Spring

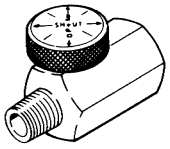

J-109B

Luft-Regulierventil
Air Regulator

Empfohlen für: recommend for Mod.:	**100B 200B**	**200 300/400**	**600 800**	**2X 3X/4X**
114C-3	**X**	**X**		**X**
115A		**X**		**X**
115B			**X**	
J-985	**X**			
J-109B / TP2012	**X**	**X**	**X**	**X**



TP2012
Luftregulierventil
Brass Air Tool Regulator



LSRR-400



590-RGK

Rückstoßarme Niethämmer, für Döpper mit Schaft 10,2 x 30 / 40,3 mm (Parker Taper) RECOILLESS RIVET HAMMERS, FOR RIVET SETS WITH **PARKER TAPER** SHANK .401 X 1.164 / 1.11/16"								
Art.Nr./Part No.	**Max. Nietleistung / Rated Rivet Capacity**				**Länge / Length**		**Gewicht / Weight**	
	Stahl	**Aluminium**	**Steel**	**Aluminum**	mm	Inches	Kg.	Lbs.
LSRR-200A	4,0 mm	4,8 mm	5/32"	3/16"	192	7.9/16"	1,3	2.8
LSRR-300A	4,8 mm	6,4 mm	3/16"	1/4"	211	8.5/16"	1,35	3.0
LSRR-400A	6,4 mm	9,5 mm	1/4""	3/8"	216	8.1/2"	1,40	3.1

Rückstoßarmer Niethammer, für Döpper mit Schaft 12,6 x 30 / 40,3 mm (Parker Taper) RECOILLESS RIVET HAMMER, FOR RIVET SETS WITH **PARKER TAPER** SHANK .498 X 1.164 / 1.11/16"								
Art.Nr./Part No.	**Max. Nietleistung / Rated Rivet Capacity**				**Länge / Length**		**Gewicht / Weight**	
	Stahl	**Aluminium**	**Steel**	**Aluminum**	mm	Inches	Kg.	Lbs.
LSRR-600A	8,0 mm	9,5 mm	5/16"	3/8"	266	10.1/2"	1,7	3.7
LSRR-800A	9,5 mm	11,1 mm	3/8"	7/16"	330	13"	3,2	7.0

Niethammer-Sortiment, wahlweise mit Niethammer 3-X oder 4-X, im Kunstoffkoffer

RIVET GUN KIT WITH RIVET HAMMER 3-X OR 4-X (PLEASE SPECIFY) WITH MOLDED RUBBER-CASE

Inhalt / Contents

590-RGK

Menge/Qty.	**Beschreibung**	**Description**	**Artikel-Nummer / Part-Number**
1	Niethammer	Rivethammer	3X oder/or 4X (Bitte angeben / please specify)
1	Luft-Regulator	Air-Regulator	TP-97
1	Rückholfeder	Retainer Spring	114C-3
1	Rückholfeder	Retainer Spring	115A
1	Öl für Niethammer	Air Tool Oil	A1142
1	Gegenhalteeisen	Bucking Bar	638
1	Gegenhalteeisen	Bucking Bar	647
1	Gegenhalteeisen	Bucking Bar	670
1	Gegenhalteeisen	Bucking Bar	681
1	Döpper, gerade	Straight Rivet Set	100A3-3/32" (AN470)
1	Döpper, gerade	Straight Rivet Set	100A3-1/8" (AN470)
1	Döpper, gerade	Straight Rivet Set	100A3-5/32" (AN470)
1	Döpper, gerade	Straight Rivet Set	100A3-3/16" (AN470)
1	Döpper, gebogen 10°	Offset Rivet Set 10°	101A3-3/32" (AN470)
1	Döpper, gebogen 10°	Offset Rivet Set 10°	101A3-1/8" (AN470)
1	Döpper, gebogen 10°	Offset Rivet Set 10°	101A3-5/32" (AN470)
1	Döpper, gebogen 10°	Offset Rivet Set 10°	101A3-3/16" (AN470)
1	Döpper, flach	Flush Rivet Set	101AF-3A
1	Döpper, flach	Flush Rivet Set	110CB
1	Döpper, flach	Flush Rivet Set	107A-2

Döpper mit Kalotte, Standard-Schaft 10,2 x 30/40,3 mm, für AN470/ NASM20470

CUPPED RIVET SETS, PARKER TAPER SHANK .401 X 1.164/1.11/16", FOR AN470 / NASM20470

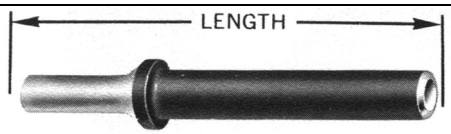

Döpper, gerade Ausführung

RIVET SET, STRAIGHT-TYPE

Gesamtlänge Length	Nietgröße 2,4 mm Rivet Size 3/32"	Nietgröße 3,2 mm Rivet Size 1/8"	Nietgröße 4,0 mm Rivet Size 5/32"	Nietgröße 4,8 mm Rivet Size 3/16"	Nietgröße 6,4 mm Rivet Size 1/4"
mm / Inch	**Art.Nr. / Part No.**	**Art.Nr. / Part No.**	**Art.Nr. / Part No.**	**Art.Nr. / Part No.**	**Art.Nr. / Part No.**
64 / **2.1/2"**	**100A2-3/32"**	**100A2-1/8"**	**100A2-5/32"**	**100A2-3/16"**	**100A2-1/4"**
89 / **3.1/2"**	**100A3-3/32"**	**100A3-1/8"**	**100A3-5/32"**	**100A3-3/16"**	**100A3-1/4"**
140 / **5.1/2"**	**100A5-3/32"**	**100A5-1/8"**	**100A5-5/32"**	**100A5-3/16"**	**100A5-1/4"**
191 / **7.1/2"**	**100A7-3/32"**	**100A7-1/8"**	**100A7-5/32"**	**100A7-3/16"**	**100A7-1/4"**
267 / **10.1/2"**	**100A8-3/32"**	**100A8-1/8"**	**100A8-5/32"**	**100A8-3/16"**	**100A8-1/4"**
343 / **13.1/2"**	**100A9-3/32"**	**100A9-1/8"**	**100A9-5/32"**	**100A9-3/16"**	**100A9-1/4"**



Döpper, 10° gebogen

RIVET SET, OFFSET-TYPE 10°

Gesamtlänge Length	Nietgröße 2,4 mm Rivet Size 3/32"	Nietgröße 3,2 mm Rivet Size 1/8"	Nietgröße 4,0 mm Rivet Size 5/32"	Nietgröße 4,8 mm Rivet Size 3/16"	Nietgröße 6,4 mm Rivet Size 1/4"
mm / Inch	**Art.Nr. / Part No.**	**Art.Nr. / Part No.**	**Art.Nr. / Part No.**	**Art.Nr. / Part No.**	**Art.Nr. / Part No.**
89 / **3.1/2"**	**101A3-3/32"**	**101A3-1/8"**	**101A3-5/32"**	**101A3-3/16"**	**101A3-1/4"**
140 / **5.1/2"**	**101A5-3/32"**	**101A5-1/8"**	**101A5-5/32"**	**101A5-3/16"**	**101A5-1/4"**
191 / **7.1/2"**	**101A7-3/32"**	**101A7-1/8"**	**101A7-5/32"**	**101A7-3/16"**	**101A7-1/4"**
267 / **10.1/2"**	**101A8-3/32"**	**101A8-1/8"**	**101A8-5/32"**	**101A8-3/16"**	**101A8-1/4"**
343 / **13.1/2"**	**101A9-3/32"**	**101A9-1/8"**	**101A9-5/32"**	**101A9-3/16"**	**101A9-1/4"**

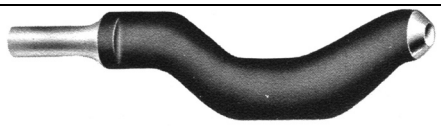

Döpper, durchgebogen

RIVET SET, GOOSENECK-TYPE

Gesamtlänge Length	Nietgröße 2,4 mm Rivet Size 3/32"	Nietgröße 3,2 mm Rivet Size 1/8"	Nietgröße 4,0 mm Rivet Size 5/32"	Nietgröße 4,8 mm Rivet Size 3/16"	Nietgröße 6,4 mm Rivet Size 1/4"
mm / Inch	**Art.Nr. / Part No.**	**Art.Nr. / Part No.**	**Art.Nr. / Part No.**	**Art.Nr. / Part No.**	**Art.Nr. / Part No.**
168 / **6.5/8"**	**104A-3/32"**	**104A-1/8"**	**104A-5/32"**	**104A-3/16"**	**104A-1/4"**



Döpper, doppelt gebogen

RIVET SET, DOUBLE OFFSET-TYPE

Gesamtlänge Length	Nietgröße 2,4 mm Rivet Size 3/32"	Nietgröße 3,2 mm Rivet Size 1/8"	Nietgröße 4,0 mm Rivet Size 5/32"	Nietgröße 4,8 mm Rivet Size 3/16"	Nietgröße 6,4 mm Rivet Size 1/4"
mm / Inch	**Art.Nr. / Part No.**	**Art.Nr. / Part No.**	**Art.Nr. / Part No.**	**Art.Nr. / Part No.**	**Art.Nr. / Part No.**
146 / **5.3/4"**	**105A-3/32"**	**105A-1/8"**	**105A-5/32"**	**105A-3/16"**	**105A-1/4"**

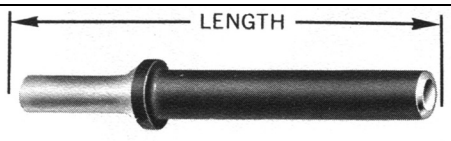

Döpper, gerade Ausführung, für modifiziertem Universal Rundkopf / RIVET SET, STRAIGHT, CUPPED, MODIFIED UNIVERSAL HEAD

***BOEING* BACR15FT TYPE**

Gesamtlänge Length	Nietgröße 3,2 mm Rivet Size 1/8"	Nietgröße 4,0 mm Rivet Size 5/32"	Nietgröße 4,8 mm Rivet Size 3/16"	Nietgröße 5,6 mm Rivet Size 7/32"	Nietgröße 6,4 mm Rivet Size 1/4"
mm / Inch	**Art.Nr. / Part No.**	**Art.Nr. / Part No.**	**Art.Nr. / Part No.**	**Art.Nr. / Part No.**	**Art.Nr. / Part No.**
89 / **3.1/2"**	**100A3-1/8"FT**	**100A3-5/32"FT**	**100A3-3/16"FT**	**100A3-7/32"FT**	**100A3-1/4"FT**



Snap-Soc

Protects rivets and sheet metal from scuffing/marring (smileys), reducing incidence of stress fractures, re-work and visible blemishes.

Art.Nr. Part No.	Nietgröße Rivet Size	Farbe Color
1003	3/32" (2.4mm)	WHITE
1004	1/8" (3.2mm)	RED
1005	5/32" (4.0mm)	GREEN
1006	3/16" (4.8mm)	YELLOW
1008	1/4" (6.4mm)	BLUE

Flach-Döpper, Standard-Schaft 10,2 x 30/40,3 mm

FLUSH RIVET SETS, PARKER TAPER SHANK .401 X 1.164/1.11/16"

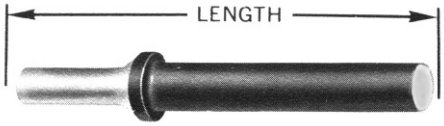

Gerade Ausführung, Durchmesser 12,7 mm
STRAIGHT-TYPE, BODY DIAMETER 1/2"

Art.Nr. / Part No.	Länge mm / Length Inch
100AF-2A	64 / **2.1/2"**
100AF-3A	89 / **3.1/2"**
100AF-5A	140 / **5.1/2"**
100AF-7A	191 / **7.1/2"**
100AF-8A	267 / **10.1/2"**



10° gebogen, Durchmesser 12,7 mm
10° OFFSET-TYPE, BODY DIAMETER 1/2"

Art.Nr. / Part No.	Länge mm / Length Inch
----	----
101AF-3A	89 / **3.1/2"**
101AF-5A	140 / **5.1/2"**
101AF-7A	191 / **7.1/2"**
101AF-8A	267 / **10.1/2"**

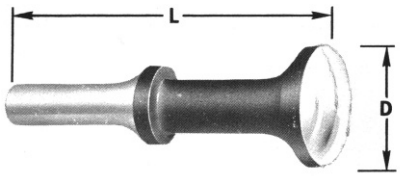

Flachdöpper , gerade, mit poliertem Kopf
FLUSH-SET,STRAIGHT,WITH POLISHED FACE

Art. Nr. Part No.	Länge mm Length Inch	Durchmesser Face Diameter
107A-1	70 / **2.3/4"**	25,4 / **1"**
107A-2	70 / **2.3/4"**	31,8 / **1.1/4"**
107A-3	89 / **3.1/2"**	31,8 / **1.1/4"**
107A-4	140 / **5.1/2"**	25,4 / **1"**

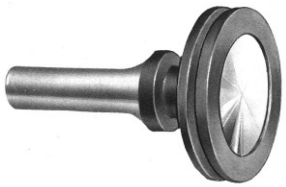

Flachdöpper , gerade, mit Gummiring
FLUSH-SET, STRAIGHT, WITH RUBBER GUARD

Art. Nr. Part No.	Länge mm Length Inch	Durchmesser Face Diameter
110CA	63,5 / **2.1/2"**	19,1 / **3/4"**
110CB	63,5 / **2.1/2"**	25,4 / **1"**
110CC	63,5 / **2.1/2"**	31,8 / **1.1/4"**



Gelenk-Döpper mit Gummihülle
FLUSH-SET, SWIVEL-TYPE WITH RUBBER SLEEVE

Art. Nr. Part No.	Länge Length	Durchmesser Face Diameter
106A	83 mm **3.1/4"**	31,8 mm **1.1/4"**

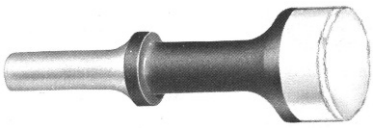

Flachdöpper mit Aluminiumkopf
FLUSH-SET, STRAIGHT, WITH ALUMIUM-HEAD

Art. Nr. Part No.	Länge Length	Durchmesser Face Diameter
107A-2D	80 mm **3.5/32"**	25,4 mm **1"**



Flachdöpper,Pilzform, mit Nylon-Ring
FLUSH RIVET SET, MUSHROOM TYPE WITH NYLON SLEEVE

Art. Nr. Part No.	Länge Length	Durchmesser Face Diameter
ST1111B-V401K-3	61 mm **2.4"**	32 mm **1.1/4"**

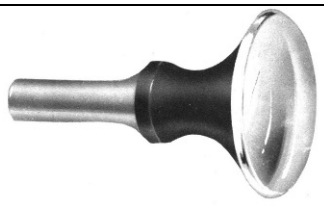

Flachdöpper, Pilzform
FLUSH RIVET SET, MUSHROOM TYPE

Art. Nr. Part No.	Länge Length	Durchmesser Face Diameter
112A	76 mm **3"**	48 mm **1.7/8"**

Flach-Döpper, Standard-Schaft 10,2 x 30/40,3 mm
FLUSH RIVET SETS, PARKER TAPER SHANK .401 X 1.164/1.11/16"

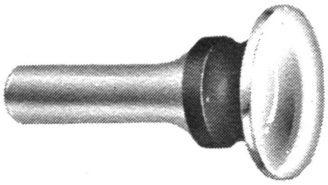

Flachdöpper, kurze Ausführung
FLUSH-RIVET-SET, STUBBY-TYPE

Art. Nr. Part No.	**Länge mm** Length Inch	**Durchmesser** Face Diameter
119A-1B	54 / **2.1/8"**	19,1 / **3/4"**
119A-2B	54 / **2.1/8"**	25,4 / **1"**
119A-3B	54 / **2.1/8"**	28,6 / **1.1/8"**
119A-4B	54 / **2.1/8"**	31,8 / **1.1/4"**

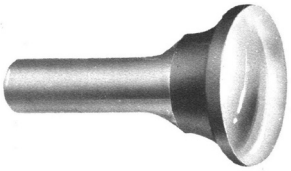

Flachdöpper, Extra-Kurz, mit poliertem Kopf
FLUSH-RIVET-SET, EXTRA-SHORT, WITH POLISHED FACE

Art. Nr. Part No.	**Länge mm** Length Inch	**Durchmesser** Face Diameter
113A-1	43,0 / **1.11/16"**	19,1 / **3/4"**
113A-2	46,0 / **1.13/16"**	25,4 / **1"**
113A-3	46,0 / **1.13/16**	31,8 / **1.1/4"**

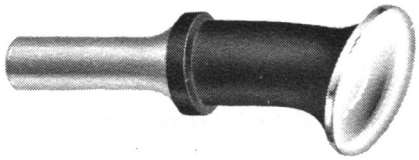

Flachdöpper, 10° gebogen
FLUSH-RIVET-SET, 10° OFFSET-TYPE

Art. Nr. / Part No.	**Länge mm** / Length Inch	**Durchmesser** / Face Diameter
121A-3	89 / **3.1/2"**	31,8 / **1.1/4"**
121A-4	140 / **5.1/2"**	25,4 / **1"**
121A-5	140 / **5.1/2"**	31,8 / **1.1/4"**
121A-6	191 / **7.1/2"**	25,4 / **1"**
121A-7	191 / **7.1/2"**	31,8 / **1.1/4"**

Döpper für Niethämmer / RIVET SETS FOR RIVET-HAMMERS
Mod. 100B & 200B
Schaftabmessung / Shank dimension: 10,2 x 12,7 mm / .401 x 1/2"

Flachdöpper Flush Rivet Sets	**Art. Nr.** Part No.	**Länge mm** Length Inch	**Durchmesser** Face Diameter
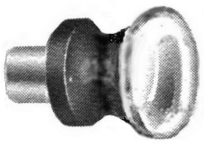	**STJ-100**	**30,2 mm** **1.3/16"**	**25,4 mm** **1"**
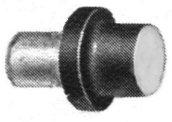	**JAT100AF-1A**	**24 mm** **15/16"**	**12,7 mm** **1/2"**

Mit Kalotte für AN470/NASM20470 Cupped Type for AN470/NASM20470	**Art. Nr.** Part No.	**Länge mm** Length Inch	**Nietgröße** Rivet Size
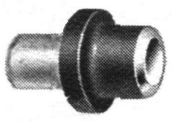	**JAT100A-1-3/32"** **JAT100A-1-1/8"** **JAT100A-1-5/32"** **JAT100A-1-3/16"**	**25,4 mm** **1"**	2,4 mm / **3/32"** 3,2 mm / **1/8"** 4,0 mm / **5/32"** 4,8 mm / **3/16"**

Döpper für Niethämmer / RIVET SETS FOR RIVET-HAMMERS
ATLAS-COPCO Mod. RRN11P02

Schaftabmessung / Shank dimension: **10,2 x 17,0 mm / .401 x .669**
Länge ohne Schaft / Length without shank: **25 mm / 1"**

Flachdöpper / Flush Rivet Sets	**Art. Nr.** / Part No.	**Durchmesser /** Face Diameter
	**DAN 5014E-H-3/4" x 25 mm** **DAN 5014E-H-1.1/8" x 25 mm**	**19,1 mm / 3/4"** **28,2 mm / 1.1/8"**
Mit Kalotte für:/ Cupped Type for: **AN470 / NASM20470 / LN9198**	**Art. Nr.** / Part No.	**Nietgröße /** Rivet Size
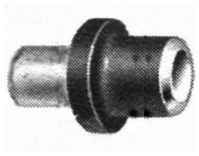	**DAN 5014A-H-2,4 x 25** **DAN 5014A-H-3,2 x 25** **DAN 5014A-H-4,0 x 25** **DAN 5014A-H-4,8 x 25**	2,4 mm **/ 3/32"** 3,2 mm **/ 1/8"** 4,0 mm **/ 5/32"** 4,8 mm **/ 3/16"**

DÖPPER FÜR HI-SHEAR NIETE, STANDARD-SCHAFT 10,2 X 30/40,3 MM
DRIVE SETS FOR HI-SHEAR RIVETS, PARKER TAPER SHANK .401 X 1.164/1.11/16"

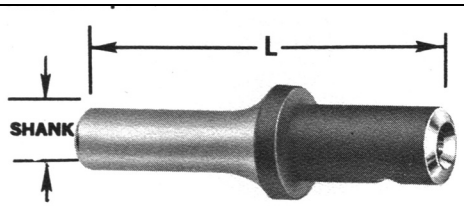

HI-SHEAR

DÖPPER, GERADE AUSFÜHRUNG
DRIVE SET, STRAIGHT-TYPE

Gesamtlänge Length	Nietgröße 3,2 mm Rivet Size 1/8"	Nietgröße 4,0 mm Rivet Size 5/32"	Nietgröße 4,8 mm Rivet Size 3/16"	Nietgröße 6,4 mm Rivet Size 1/4"
mm / **Inch**	**Art.Nr. / Part No.**	**Art.Nr. / Part No.**	**Art.Nr. / Part No.**	**Art.Nr. / Part No.**
89 / **3.1/2"**	**130A-3-1/8**	**130A-3-5/32**	**130A-3-3/16**	**130A-3-1/4**
140 / **5.1/2"**	**130A-5-1/8**	**130A-5-5/32**	**130A-5-3/16**	**130A-5-1/4**

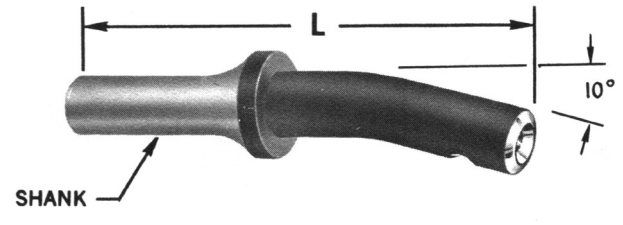

HI-SHEAR

DÖPPER, 10° GEBOGEN
DRIVE SET, OFFSET-TYPE 10°

Gesamtlänge Length	Nietgröße 3,2 mm Rivet Size 1/8"	Nietgröße 4,0 mm Rivet Size 5/32"	Nietgröße 4,8 mm Rivet Size 3/16"	Nietgröße 6,4 mm Rivet Size 1/4"
mm / **Inch**	**Art.Nr. / Part No.**	**Art.Nr. / Part No.**	**Art.Nr. / Part No.**	**Art.Nr. / Part No.**
89 / **3.1/2"**	**130A-3-1/8**	**130A-3-5/32**	**130A-3-3/16**	**130A-3-1/4**



LÄNGE CA. 108 MM, DORN CA. 64 MM
LENGTH APPR. 4.1/4", PUNCH APPR. 2.1/2"

Niet-Austreiber
KNOCK-OUT PUNCHES

Nietgröße RIVET SIZE	**Schaft 10,2 x 30/40,3 mm** SHANK .401 X 1.164/1.11/16" **Art. Nr. / Part No.**	**Schaft 12,7 x 30/40,3 mm** SHANK .498 X 1.164/1.11/16" **Art. Nr. / Part No.**
3/32"	**140A-3**	
1/8"	**140A-4**	
5/32"	**140A-5**	
3/16"	**140A-6**	**140B-6**
1/4"	**140A-8**	**140B-8**
5/16"	**140A-10**	**140B-10**
3/8"	**140A-12**	**140B-12**

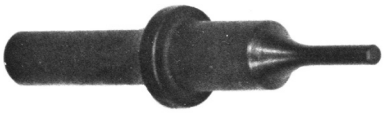

LÄNGE CA. 89 MM, DORN CA. 13 MM
LENGTH APPR. 3.1/2", PUNCH APPR. 1/2"

Niet-Austreiber
KNOCK-OUT PUNCHES

Nietgröße RIVET SIZE	**Schaft 10,2 x 30/40,3 mm** SHANK .401 X 1.164/1.11/16" **Art. Nr. / Part No.**	**Schaft 12,7 x 30/40,3 mm** SHANK .498 X 1.164/1.11/16" **Art. Nr. / Part No.**
3/32"	**141A3-3/32"**	
1/8"	**141A3-1/8"**	
5/32"	**141A3-5/32"**	
3/16"	**141A3-3/16"**	**141B3-3/16"**
1/4"	**141A3-1/4"**	**141B3-1/4"**
5/16"	**141A3-5/16"**	**141B3-5/16"**
3/8"	**141A3-3/8"**	**141B3-3/8"**



Art. Nr. / Part No.: 1206-6

Flachmeißel für Niethammer
FLAT CHISEL GUN SET

SCHAFT 10,2 X 30/40,3 MM SHANK .401 X 1.164/1.11/16"	**Gesamtlänge 171 MM** OVERALL-LENGTH 6.3/4"

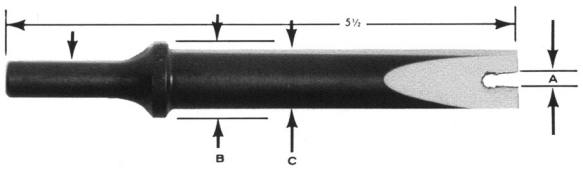

Collar-Meißel für LOCKBOLTS
GUN-TYPE CHISEL FOR LOCKBOLTS

Art. Nr. **Part No.**	**Gesamtlänge** Over-All-Length	**Nietgröße** Rivet Size	**A** +0,03 / -0,00 mm +.001 / -.000 Inch	**B**	**C**
2165-2	140 mm **/ 5.1/2"**	4,0 mm **/ 5/32"**	3,96 mm **/ .156**	19,05 mm / **3/4"**	12,7 mm / **1/2"**
2165-3	140 mm **/ 5.1/2"**	4,8 mm **/ 3/16"**	4,75 mm **/ .187**	19,05 mm / **3/4"**	15,9 mm / **5/8"**
2165-4	140 mm **/ 5.1/2"**	6,4 mm **/ 1/4"**	6,35 mm **/ .250**	19,05 mm / **3/4"**	15,9 mm / **5/8"**
2165-5	140 mm **/ 5.1/2"**	7,9 mm **/ 5/16"**	7,92 mm **/ .312**	19,05 mm / **3/4"**	15,9 mm / **5/8"**
2165-6	140 mm **/ 5.1/2"**	9,5 mm **/ 3/8"**	9,53 mm **/ .375**	22,23 mm / **7/8"**	19,1 mm / **3/4"**

Wolfram Gegenhalter / TUNGSTEN BUCKING BARS

Bucking bars made of tungsten provide increased weight (density) to allow riveting in confined areas. The weight to size ratio provides good kinetic energy transfer and will expedite the installation process. We offer a standard shapes and a consistent weight that should allow up to 3/16 diameter fastener installation. We can quote special contours upon request.

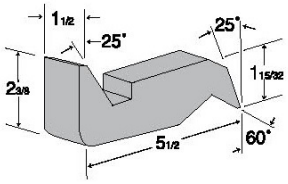

TP1111T 7.03 lbs.

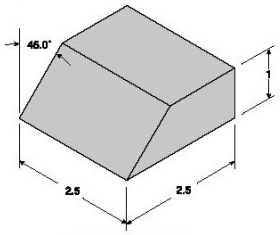

TP51T 3.50 lbs.

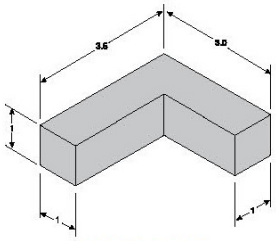

TP52T 3.80 lbs.

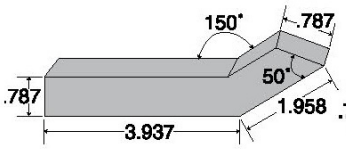

TP54T 2.20 lbs.

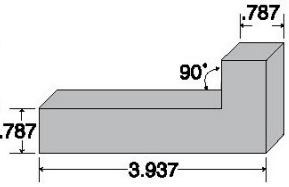

TP55T 1.76 lbs.

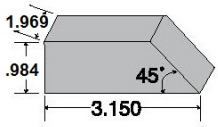

TP56T 2.97 lbs.

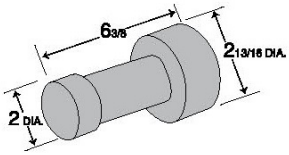

TP601T 12.25 lbs.

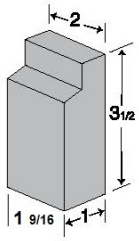

TP605T 3.39 lbs.

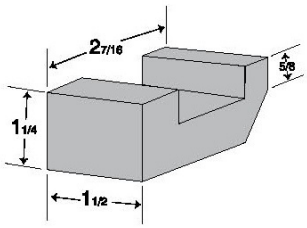

TP634T 2.02 lbs.

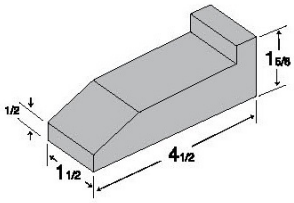

TP639T 3.77 lbs.

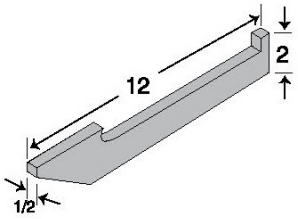

TP646T 6.05 lbs.

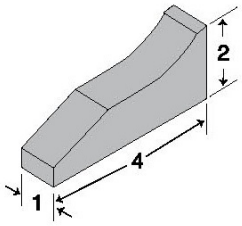

TP647T 3.15 lbs.

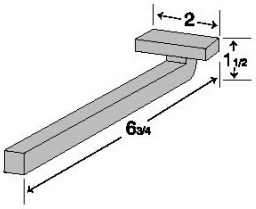

TP662T 4.38 lbs.

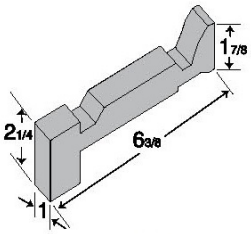

TP670T 5.23 lbs.

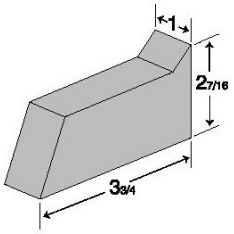

TP721T 3.30 lbs.

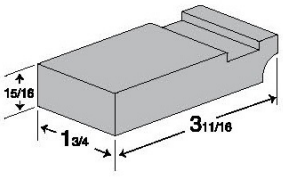

TP723T 3.08 lbs.

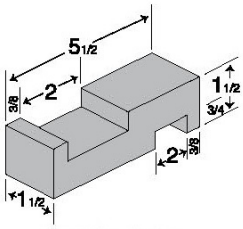

TP736T 4.63 lbs.

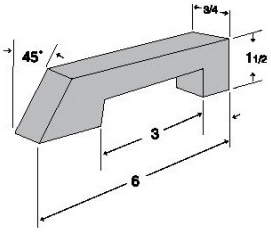

TP760B-1T 2.86 lbs.

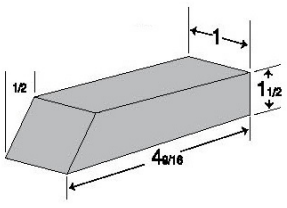

TP760B-10T 3.55 lbs.

Andere Formen und Abmessungen sind auf Anfrage lieferbar
OTHER SHAPES AND DIMENSIONS ARE AVAILABLE ON REQUEST

Gegenhalteisen / BUCKING BARS

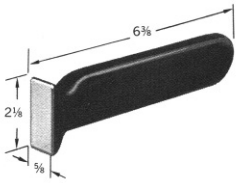	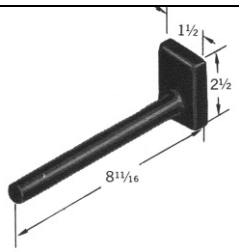	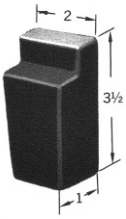	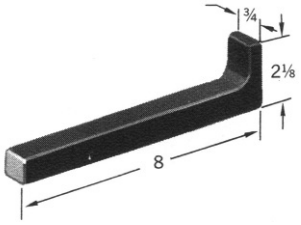
602 1.1/4 lbs.	**604** 1.3/4 lbs.	**605** 1.1/2 lbs.	**608** 1.1/4 lbs.
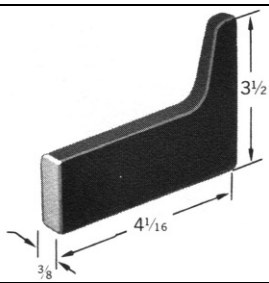	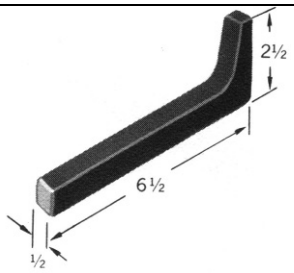	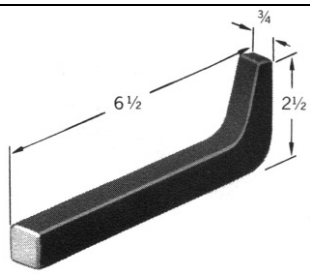	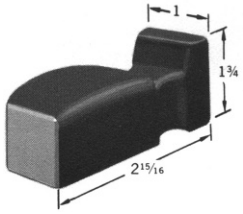
610 3/4 lbs.	**611** 1 lbs.	**612** 1.1/4 lbs.	**616** 1 lbs.
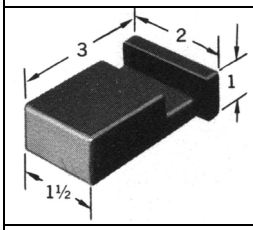	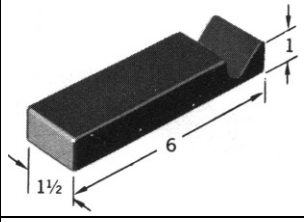	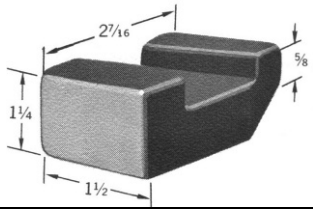	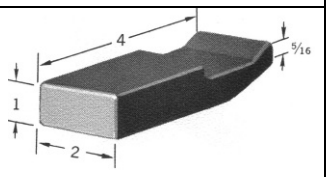
619 1.1/4 lbs.	**622** 2.1/2 lbs.	**634** 1 lbs.	**637** 1.3/4 lbs.
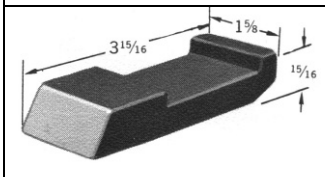	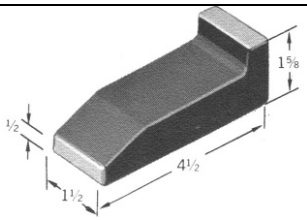	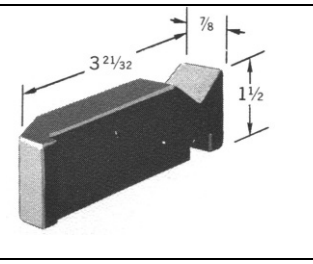	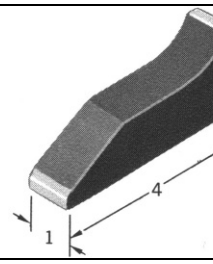
638 1.1/4 lbs.	**639** 2 lbs.	**643** 1.1/4 lbs.	**647** 1.1/2 lbs.
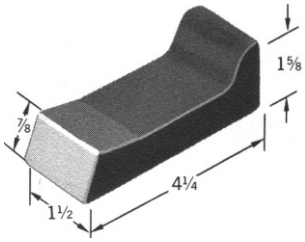	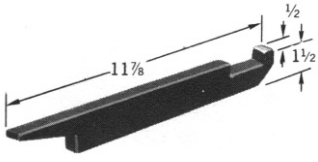	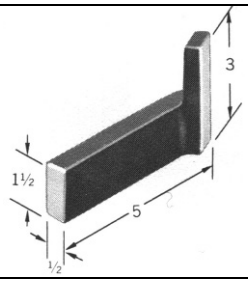	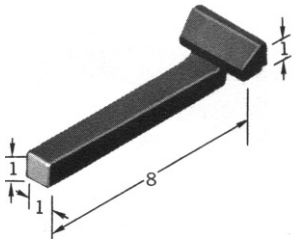
648 1.3/4 lbs.	**649** 2 lbs.	**656** 1.1/4 lbs.	**668** 3.1/4 lbs.
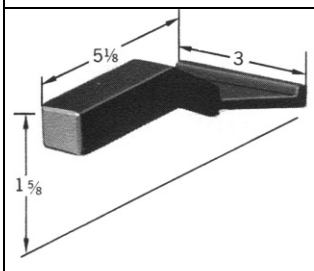	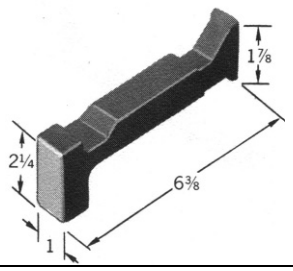	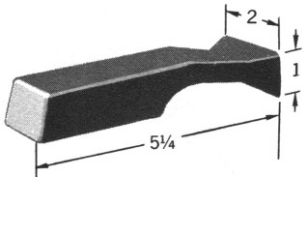	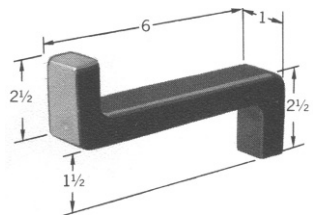
669 1 1/2 lbs.	**670** 2 lbs.	**681** 1.1/2 lbs.	**690** 2.3/4 lbs.

Gegenhalteisen / BUCKING BARS

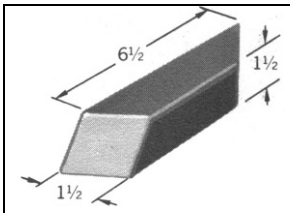	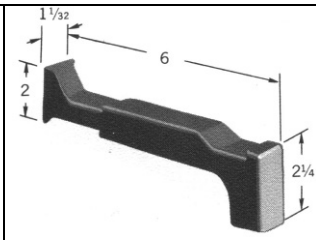	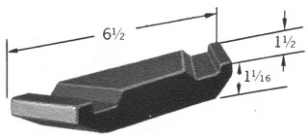	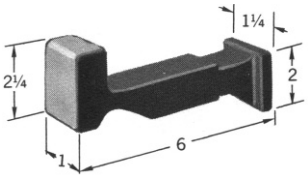
692 3 lbs.	**694** 2 lbs.	**702** 2.1/4 lbs.	**719** 2 lbs.
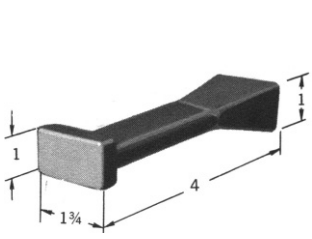	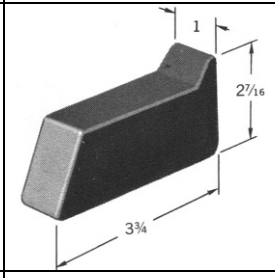	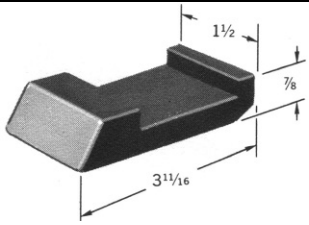	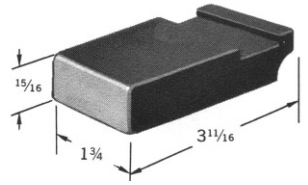
720 3/4 lbs.	**721** 1.3/4 lbs.	**722** 1 lbs.	**723** 1.1/2 lbs.
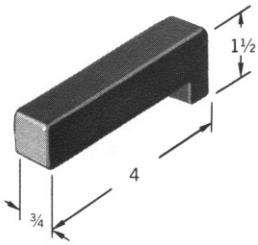	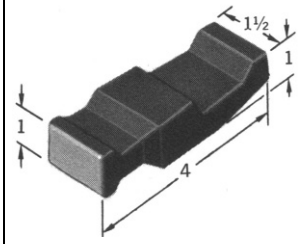	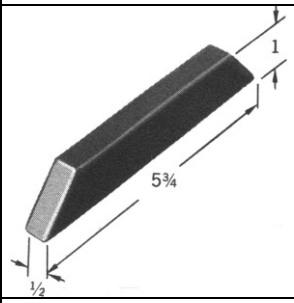	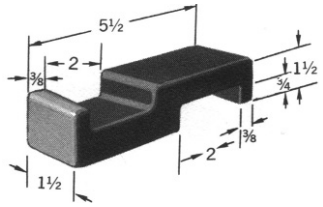
727 1 lbs.	**730** 1.1/4 lbs.	**732** 3/4 lb.	**736** 2.1/2 lbs.
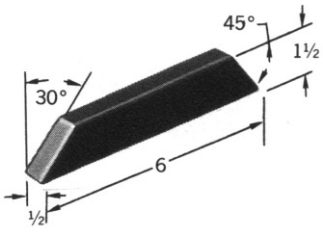	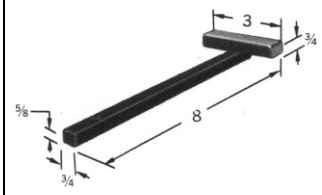	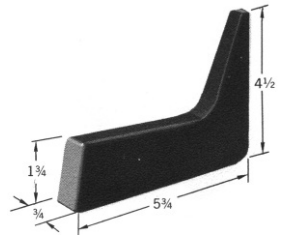	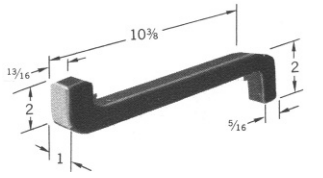
737 1 lbs.	**750D-23** 1.1/2 lbs.	**750N-1** 2.1/4 lbs.	**750S- 1** 3.1/4 lbs.
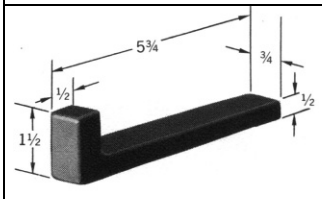	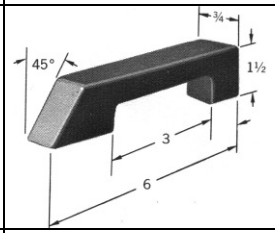	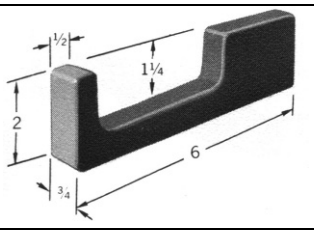	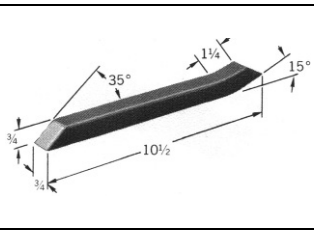
751Y-11 3/4 lbs.	**760B-2** 1 lbs.	**760B-3** 1.1/2 lbs.	**760B-7** 1.1/2 lbs.
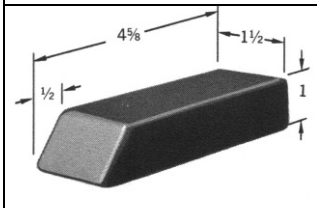	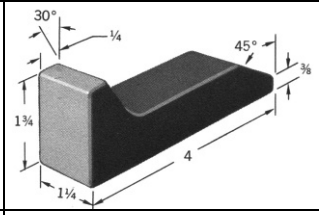		
760B-10 3/4 lb.	**763** 2.1/2 lbs.		

Schwermetall (Wolfram) Gegenhalteisen sind auf Anfrage lieferbar
HEAVY METAL (WOLFRAM) BUCKING BARS ARE AVAILABLE ON REQUEST

Rückschlaggedämpfter Gegenhalteeisen-Satz
TRAUMA REDUCING BUCKING BAR - KIT

1001K

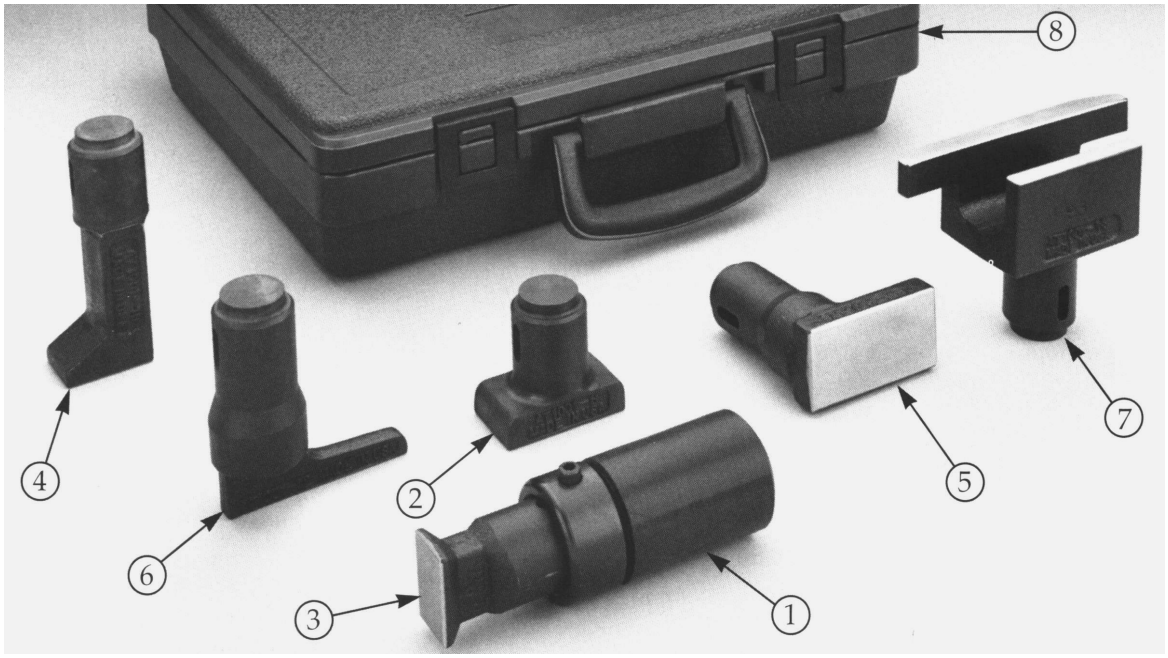

Pos. ITEM	**Beschreibung** DESCRIPTION	**Artikel-Nr.** PART NO.
1	**Halter/**HANDLE	**1001-A**
2	**Gegenhalteeisen/**BAR	**1001-8**
3	**Gegenhalteeisen/**BAR	**1001-9**
4	**Gegenhalteeisen/**BAR	**1001-10**
5	**Gegenhalteeisen/**BAR	**1001-11**
6	**Gegenhalteeisen/**BAR	**1001-12**
7	**Gegenhalteeisen/**BAR	**1001-13**
8	**Koffer/**CARRYING CASE	**1001-14**

Hand-Nietpressen / HAND RIVET SQUEEZER

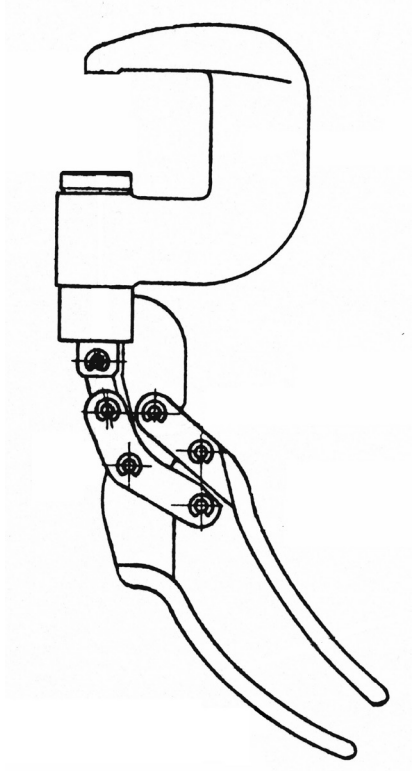

NZ62 (410510)

360° Schwenkkopf, feststellbar in jeder Position
Mit verstellbarem Stößel (max. 15 mm)
Schaftaufnahme: 4,76 mm
Hub: 8 mm
Nietleistung: Aluminium 2,6 mm Stahl 2,0 mm
Ohne Nietbügel !
Bitte aus nachstehender Tabelle auswählen!

360° SWIVEL YOKE CAN BE LOCKED IN ANY POSITION
WITH ADJUSTABLE SET HOLDER (MAX. .590")
RIVET SHANK 3/16"
STROKE: .315"
RIVET CAPACITY: ALUMINUM .1024" STEEL .0787"
WITHOUT C-YOKE !
PLEASE SELECT FROM FOLLOWING CHART !

C-Bügel für NZ62 / C-YOKES FOR NZ62

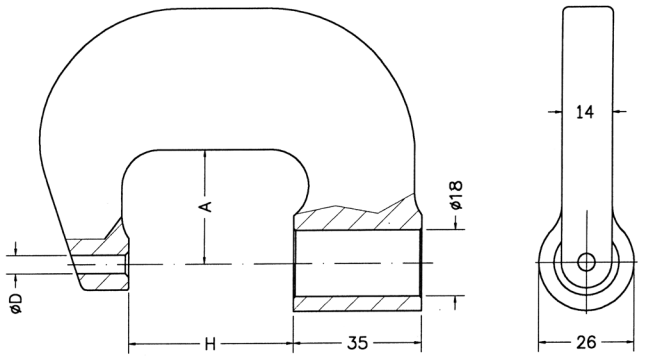

Artikel-Nr. PART NO.	**für Nietschaft** FOR RIVET SHANK	**Abmessungen** DIMENSIONS	
		A	**H**
417002	**3/16"** (4,76 mm)	**30 mm** (1.18")	**45 mm** (1.77")
417007	**3/16"** (4,76 mm)	**40 mm** (1.57")	**45 mm** (1.77")
417012	**3/16"** (4,76 mm)	**60 mm** (2.36")	**45 mm** (1.77")
417052	**3/16"** (4,76 mm)	**40 mm** (1.57")	**70 mm** (2.76")
417057	**3/16"** (4,76 mm)	**60 mm** (2.36")	**70 mm** (2.76")
417062	**3/16"** (4,76 mm)	**100 mm** (3.93")	**70 mm** (2.76")

Hand-Nietpressen / HAND RIVET SQUEEZER

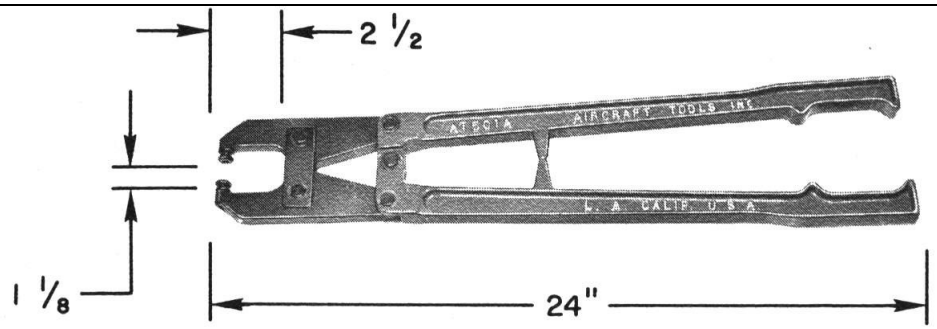

Artikel-Nr. PART NO.	**für Nietschaft** FOR RIVET SHANK	**Bemerkungen** REMARKS
501-A	**3/16"** (4,76 mm)	**verstellbarer Nietschafthalter** ADJUSTABLE RIVET SET HOLDER

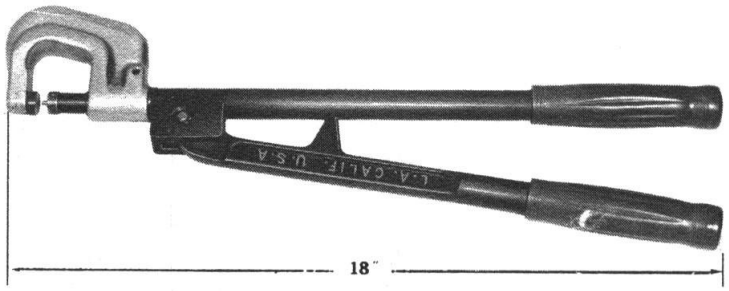

360° Schwenkkopf, festellbar in jeder Position
360° SWIVEL YOKE CAN BE LOCKED IN ANY POSITION

Artikel-Nr. PART NO.	**für Nietschaft** FOR RIVET SHANK	Ausladung C-Bügel	**Bemerkungen** REMARKS
502-AHD	**3/16"** (4,76 mm)	**1.1/2"** (38,1 mm)	**verstellbarer Nietschafthalter** ADJUSTABLE RIVET SET HOLDER
502-AHE	**3/16"** (4,76 mm)	**3"** (76,2 mm)	**verstellbarer Nietschafthalter** ADJUSTABLE RIVET SET HOLDER

360° Schwenkbügel für pneum. Nietpressen
360° SWIVEL YOKE ATTACHEMENTS
FOR COMPRESSION RIVETERS

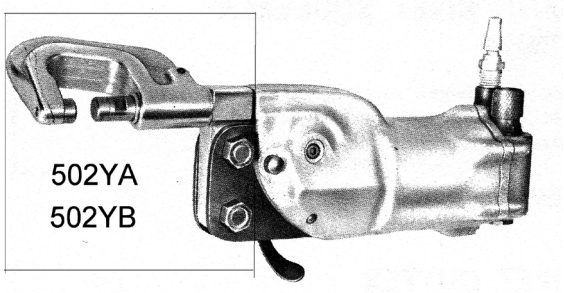

ohne Nietpresse / without Riveter !

Verstellbarer Nietstößel
ADJUSTABLE RIVET SET HOLDER / REACH 1.1/2"

Schaftaufnahme 4,76 mm
FOR RIVET SHANK 3/16"

Empfohlen für Nietpressen Mod.
RECOMMEND FOR RIVETERS MOD.

705C / 114CC / CP214

Artikel-Nr. / PART NO.	**502YA**	**Ausladung** / REACH: (38 mm) **1.1/2"**
Artikel-Nr. / PART NO.	**502YB**	**Ausladung** / REACH: (76 mm) **3"**

Pneum. Nietpressen mit C-Bügel / COMPRESSION RIVETERS - C TYPE



114CC & 705-HF

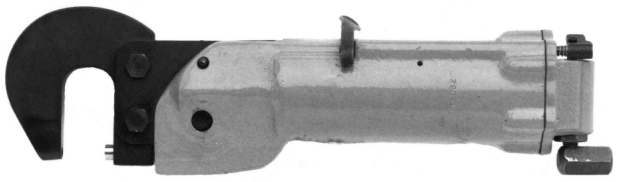

114TCC & 720-HF

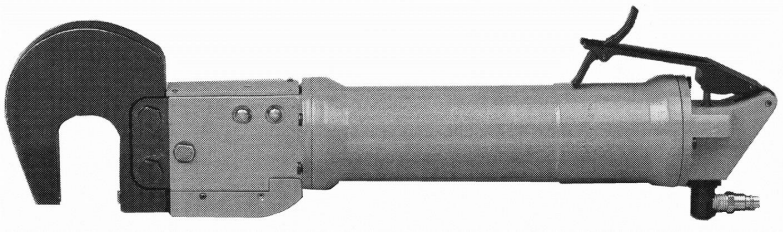

735-C

Model	**114-CC**		**705-HF**		**114-TCC**		**720-HF**		**735-C**	
	Alu	Steel	Alu	Steel	Alu	Steel	Alu	Steel	Alu	Steel
Nietleistung Kalt-Niete (mm) CAPACITY COLD RIVET (INCH)	4,0 5/32	3,2 1/8	4,0 5/32	3,2 1/8	6,4 1/4	4,8 3/16	6,4 1/4	4,8 3/16	7,9 5/16	6,4 1/4
max. Hub (mm) MAX. TRAVEL (INCH)	14,3 mm 9/16 "		12,7 mm 1/2 "		14,3 mm 9/16 "		12,7 mm 1/2 "		14,3 mm 9/16 "	
max. Druckkraft mit 6,21 bar MAX. FORCE mit/with 90 P.S.I.	18,69 kn 4200 lbs.		20,03 kn 4500 lbs.		34,26 kn 7700 lbs.		40,05 kn 9000 lbs.		48,95 kn 11000 lbs.	
max. Kraft ereicht am Hubende: PART OF STROKE AT MAX. FORCE:	1,6 mm 1/16"		0,8 mm 1/32"		1,6 mm 1/16"		0,8 mm 1/32"		3,2 mm 1/8"	
ca. Gewicht mit Std. C-Bügel APPR. WEIGHT WITH STD. C -YOKE	2,0 kg 4.5 lbs.		2,0 kg 4.5 lbs.		2,5 kg 5.5 lbs.		2,5 kg 5.5 lbs.		4,6 kg 10.1 lbs.	
ca. Länge mit Std. C-Bügel APPR. LENGTH with STD C-YOKE	260 mm 10.1/4"		260 mm 10.1/4"		362 mm 14"		362 mm 14"		525 mm 21"	
Anschluß / AIR INLET	1/4" NPT		1/4" NPT		1/4" NPT		1/4" NPT		1/4" NPT	

114CC 114TCC 705-HF 720-HF

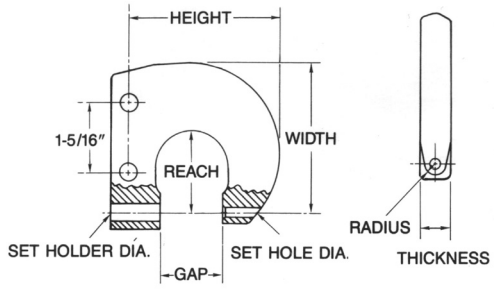

735-C

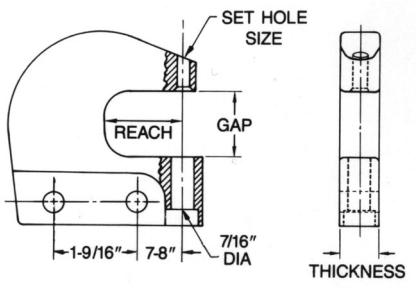

Bügel Nr. Yoke No.	**Reach**	**Gap**	**Set Hole**	**Width**	**Thickness**
538	38 mm **1.1/2"**	32 mm **1.1/4"**	4,8 mm **3/16"**	76 mm **3"**	14,3 mm **9/16"**
958	51 mm **2"**	32 mm **1.1/4"**	4,8 mm **3/16"**	90 mm **3.9/16"**	14,3 mm **9/16"**
959	64 mm **2.1/2"**	35 mm **1.3/8"**	4,8 mm **3/16"**	117 mm **4.5/8"**	14,3 mm **9/16"**
960	76 mm **3"**	38 mm **1.1/2"**	4,8 mm **3/16"**	133 mm **5.1/4"**	25,4 mm **1"**
961	89 mm **3.1/2"**	38 mm **1.1/2"**	4,8 mm **3/16"**	154 mm **6.1/16"**	25,4 mm **1"**

Bügel Nr. Yoke No.	**Reach**	**Gap**	**Set Hole**	**Thickness**
7479	38 mm **1.1/2"**	32 mm **1.1/4"**	4,8 mm **3/16"**	19,4 mm **3/4"**
7481	51 mm **2"**	38 mm **1.1/2"**	4,8 mm **3/16"**	22,2 mm **7/8"**
7482	76 mm **3"**	38 mm **1.1/2"**	4,8 mm **3/16"**	28,6 mm **1.1/8"**
7483	38 mm **1.1/2"**	51 mm **2"**	4,8 mm **3/16"**	25,4 mm **1"**
7484	64 mm **2.1/2"**	35 mm **1.3/8"**	4,8 mm **3/16"**	25,4 mm **1"**
7485	64 mm **2.1/2"**	44 mm **1.3/4"**	4,8 mm **3/16"**	28,6 mm **1.1/8"**

Bitte geben Sie bei Bestellung einer Nietpresse die Art.Nr. des gewünschten C-Bügels an
PLEASE SPECIFY C-YOKE PART-NUMBER WHEN ORDERING

Pneumatische Nietpressen mit Alligator-Kopf
COMPRESSION RIVETERS - ALLIGATOR JAW TYPE

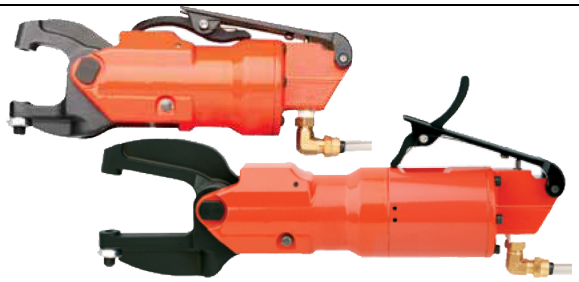

702 & 702T (Ultra Lite Design)

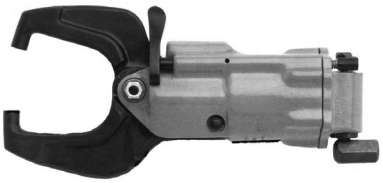

114AA & 710A-HF

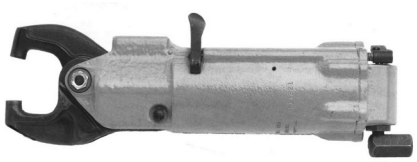

114TAA & 725A-HF

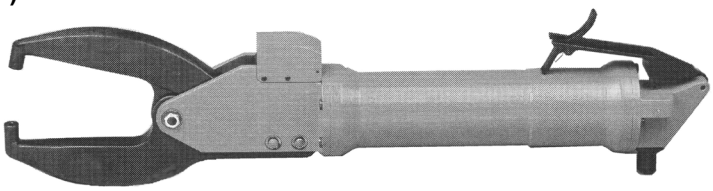

735A

Model - Bügel-Tiefe MODEL - JAW REACH	**Nietleistung Kalt-Niete** CAPACITY COLD RIVETS		**max. Druckkraft mit 6,21 Bar** MAX. FORCE WITH 90 PSI	**max. Kraft ereicht am Hubende** PART OF STROKE AT MAX. FORCE	**Gewicht mit Bügel** WEIGHT WITH JAWS	**Länge** LENGTH	**Anschluß** AIR INLET
	Alu	**Steel**					
702 - 1"	3,2 mm 1/8"	2,4 mm 3/32"	9,78 kn 2200 lbs.	0,8 mm 1/32"	1,0 kg 2.2 lbs.	186mm 7.33 inch	1/4" NPT
702T - 1"	4,0 mm 5/32"	3,2 mm 1/8"	17,79 kn 4000 lbs.	1,6 mm 1/16"	1,1 kg 2.5 lbs.	242mm 9.50 inch	1/4" NPT
702T - 2"	3,2 mm 1/8"	2,4 mm 3/32"	8,89 kn 2000 lbs.	0,8 mm 1/32"	1,2 kg 2.7 lbs.	267mm 10.50 inch	1/4" NPT
114AA - 1.1/2"	4,0 mm 5/32"	3,2 mm 1/8"	19,13 kn 4300 lbs.	1,6 mm 1/16"	1,7 kg 3.3/4 lbs.	233 mm 9.3/16"	1/4" NPT
710A-HF - 1.1/2"	4,0 mm 5/32"	3,2 mm 1/8"	20,03 kn 4500 lbs.	0,8 mm 1/32"	1,7 kg 3.3/4 lbs.	233 mm 9.3/16"	1/4" NPT
114AA - 2.1/4"	3,2 mm 1/8"	2,4 mm 3/32"	17,35 kn 3900 lbs.	2,4 mm 3/32"	1,9 kg 4.1/4 lbs.	257 mm 10.1/8"	1/4" NPT
710A-HF - 2.1/4"	3,2 mm 1/8"	2,4 mm 3/32"	14,69 kn 3300 lbs.	1,2 mm 3/64"	1,9 kg 4.1/4 lbs.	257 mm 10.1/8"	1/4" NPT
114TAA - 1.1/2"	6,4 mm 1/4"	4,8 mm 3/16"	34,71kn 7800 lbs.	1,6 mm 1/16"	2,3 kg 5 lbs.	305 mm 12"	1/4" NPT
725A-HF - 1.1/2"	6,4 mm 1/4"	4,8 mm 3/16"	40,05 kn 9000 lbs.	0,8 mm 1/32"	2,5 kg 5.1/2 lbs.	305 mm 12"	1/4" NPT
114TAA - 2.1/4"	4,8 mm 3/16"	4,0 mm 5/32"	28,03 kn 6300 lbs.	2,4 mm 3/32"	2,5 kg 5.1/2 lbs.	330 mm 13"	1/4" NPT
725A-HF - 2.1/4"	4,8 mm 3/16"	4,0 mm 5/32"	28,70 kn 6450 lbs.	1,2 mm 3/64"	2,7 kg 6 lbs.	330 mm 13"	1/4" NPT
114TAA - 3"	4,0 mm 5/32"	3,2 mm 1/8"	24,92 kn 5600 lbs.	3,2 mm 1/8"	2,7 kg 6 lbs.	349 mm 13.3/4"	1/4" NPT
725A-HF - 3"	4,0 mm 5/32"	3,2 mm 1/8"	22,70 kn 5100 lbs.	1,6 mm 1/16"	2,8 kg 6.1/4 lbs.	349 mm 13.3/4"	1/4" NPT
735A - 3"	6,4 mm 1/4"	4,8 mm 3/16"	44,50 kn 10000 lbs.	1,6 mm 1/16"	4,4 kg 9.3/4 lbs.	565 mm 22.1/4"	1/4" NPT
735A - 5"	4,8 mm 3/16"	4,0 mm 5/32"	30,26 kn 6800 lbs.	2,4 mm 3/32"	5,0 kg 11 lbs.	616 mm 24.1/4"	1/4" NPT

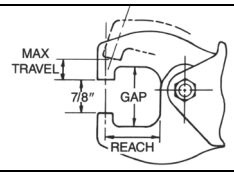

	Bügel-Satz JAW ASSY	**fester Bügel** STAT. JAW	**beweglicher Bügel** MOVING JAW	**Bohrung** Set Hole Size	**Tiefe** REACH	**Höhe** GAP	**Max. Weg** MAX.TRAVEL
702 & 702T-1" 3/16" Set Hole	**22342**	**---**	**---**	4,76 mm **3/16"**	25.4 mm **1"**	21,4 mm **1-7/64"**	9,50 mm **3/8 "**
702 & 702T-1" 3/16" ADJUSTIBLE	**22442**	**---**	**---**	4,76 mm **3/16"**	25.4 mm **1"**	21,4 mm **1-7/64"**	9,50 mm **3/8 "**
702T-2" 3/16" ADJUSTIBLE	**22581**	**---**	**---**	4,76 mm **3/16"**	50.8 mm **2"**	21,4 mm **1-7/64"**	19,05 mm **3/4"**
114AA & 114TAA-1.1/2"	**---**	**5002**	**5004**	4,76 mm **3/16"**	38 mm **1.1/2"**	41 mm **1.5/8"**	15,88 mm **5/8"**
114AA & 114TAA-2.1/4"	**---**	**5002-2.1/4**	**5004-2.1/4**	4,76 mm **3/16"**	57 mm **2.1/4"**	45 mm **1.3/4"**	22,23 mm **7/8"**
114AA & 114TAA-3"	**---**	**5002-3**	**5004-3**	4,76 mm **3/16"**	76 mm **3"**	54 mm **2.1/8"**	31,75 mm **1.1/4"**
710A-HF & 725A-HF-1.1/2"	**7360**	**457**	**3488**	4,76 mm **3/16"**	38 mm **1.1/2"**	41 mm **1.5/8"**	15,88 mm **5/8"**
710A-HF & 725A-HF-2.1/4"	**7362**	**1213**	**3490**	4,76 mm **3/16"**	57 mm **2.1/4"**	45 mm **1.3/4"**	22,23 mm **7/8"**
710A-HF & 725A-HF-3"	**7364**	**1215**	**3491**	4,76 mm **3/16"**	76 mm **3"**	54 mm **2.1/8"**	31,75 mm **1.1/4"**
735A-3"	**17148**	**17318**	**17317**	4,76 mm **3/16"**	76 mm **3"**	57 mm **2.1/4"**	22,23 mm **7/8"**
735A-5"	**17146**	**17284**	**17285**	4,76 mm **3/16"**	127 mm **5"**	57 mm **2.1/4"**	29,37 mm **1.5/32"**

Pneumatische Nietpressen mit Alligator-Kopf
COMPRESSION RIVETERS - ALLIGATOR JAW TYPE

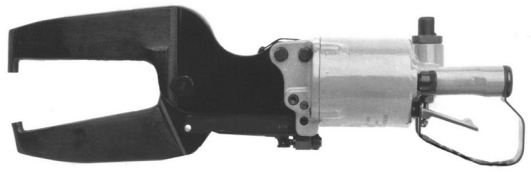

740A & 151A

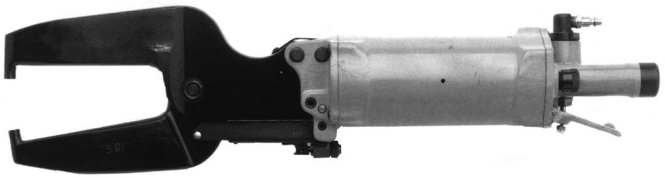

750A

Modell - Bügel-Tiefe MODEL - JAW REACH	**Nietleistung Kalt-Niete** CAPACITY COLD RIVETS		**max. Druckkraft mit 6,21Bar** MAX. FORCE WITH 90 PSI	**max. Kraft ereicht am Hubende** PART OF STROKE AT MAX. FORCE	**Gewicht mit Bügel** WEIGHT WITH JAWS	**Länge** LENGTH	**Anschluß** AIR INLET
	Alu	**Steel**					
740A - 2.7/8"	4,8 mm 3/16"	4,0 mm 5/32"	36,19 kn 8150 lbs.	3,2 mm 1/8"	7,5 kg 16.1/2 lbs.	502 mm 19.3/4"	1/4" NPT
151A - 2.7/8"	4,0 mm 5/32"	3,2 mm 1/8"	23,14 kn 5200 lbs.	3,2 mm 1/8"	7,3 kg 16 lbs.	495 mm 19.1/2"	1/4" NPT
740A - 5"	4,0 mm 5/32"	3,2 mm 1/8"	20,85 kn 4695 lbs.	3,2 mm 1/8"	9,9 kg 21.3/4 lbs.	552 mm 21.3/4"	1/4" NPT
151A - 5"	3,2 mm 1/8"	2,4 mm 3/32"	15,13 kn 3400 lbs.	3,2 mm 1/8"	9,1 kg 20 lbs.	549 mm 21.5/8"	1/4" NPT
740A - 7"	3,2 mm 1/8""	2,4 mm 3/32"	14,88 kn 3350 lbs.	4,8 mm 3/16"	11,6 kg 25.1/2 lbs.	603 mm 23.3/4"	1/4" NPT
151A - 7"	3,2 mm 1/8"	2,4 mm 3/32"	13,35 kn 3000 lbs.	4,8 mm 3/16"	10,9 kg 24 lbs.	600 mm 23.5/8"	1/4" NPT
750A - 2.7/8"	7,9 mm 5/16"	6,4 mm 1/4"	72,38 kn 16300 lbs.	4,8 mm 3/16"	8,6 kg 19 lbs.	635 mm 25"	1/4" NPT
750A - 5"	6,4 mm 1/4"	4,8 mm 3/16"	41,70 kn 9390 lbs.	4,8 mm 3/16"	11,0 kg 24.1/4"	685 mm 27"	1/4" NPT
750A - 7"	4,8 mm 3/16"	4,0 mm 5/32"	29,84 kn 6720 lbs.	4,8 mm 3/16"	12,7 kg 28 lbs.	736 mm 29"	1/4" NPT
750A - 9.1/8"	4,8 mm 3/16"	4,0 mm 5/32"	22,82 kn 5140 lbs.	4,8 mm 3/16"	13,1 kg 29 lbs.	790 mm 31.1/8"	1/4" NPT

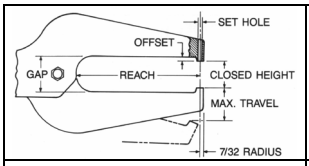

	Bügel-Satz Nr. JAW - ASSY NO	**fester Bügel** STAT. JAW	**bewegl. Bügel** MOVING JAW	**Bohrung** Set Hole Size	**Bügel-Tiefe** REACH	**Bügel-Höhe** GAP	**geschlossene Bügelhöhe** CLOSED HIGHT	**Max. Weg** MAX. TRAVEL
740A-2.7/8"	**2460**	**2459**	**2461**	4,76 mm **3/16"**	73 mm **2.7/8"**	41 mm **1.5/8"**	22,23 mm **7/8"**	20,64 mm **13/16"**
740A-5"	**1767**	**1744**	**1745**	4,76 mm **3/16"**	127 mm **5"**	41 mm **1.5/8"**	22,23 mm **7/8"**	34,93 mm **1.3/8"**
740A-7"	**1769**	**582**	**581**	4,76 mm **3/16"**	178 mm **7"**	54 mm **2.1/8"**	19,05 mm **3/4"**	47,63 mm **1.7/8"**
151A-2.7/8"		**35208**	**35209**	4,76 mm **3/16"**	73 mm **2.7/8"**	41 mm **1.5/8"**	22,23 mm **7/8"**	20,64 mm **13/16"**
151A-5"		**35210**	**35211**	4,76 mm **3/16"**	127 mm **5"**	41 mm **1.5/8"**	22,23 mm **7/8"**	34,93 mm **1.3/8"**
151A-7"		**35220**	**35219**	4,76 mm **3/16"**	178 mm **7"**	54 mm **2.1/8"**	38,10 mm **1.1/2"**	42,86 mm **1.11/16"**
750A-2.7/8"	**2460**	**2459**	**2461**	4,76 mm **3/16"**	73 mm **2.7/8"**	41 mm **1.5/8"**	22,23 mm **7/8"**	20,64 mm **13/16"**
750A-5"	**1767**	**1744**	**1745**	4,76 mm **3/16"**	127 mm **5"**	41 mm **1.5/8"**	22,23 mm **7/8"**	34,93 mm **1.3/8"**
750A-7"	**1769**	**582**	**581**	4,76 mm **3/16"**	178 mm **7"**	54 mm **2.1/8"**	19,05 mm **3/4"**	47,63 mm **1.7/8"**
750A-9.1/8"	**449**	**414**	**549**	4,76 mm **3/16"**	232 mm **9.1/8"**	54 mm **2.1/8"**	19,05 mm **3/4"**	63,50 mm **2.1/2"**

Pneum. Nietpressen mit Fußschalter und C-Bügel für Tischmontage

FOOT CONTROL COMPRESSION RIVETERS - C TYPE - BENCH MODELS

114TCC-98G

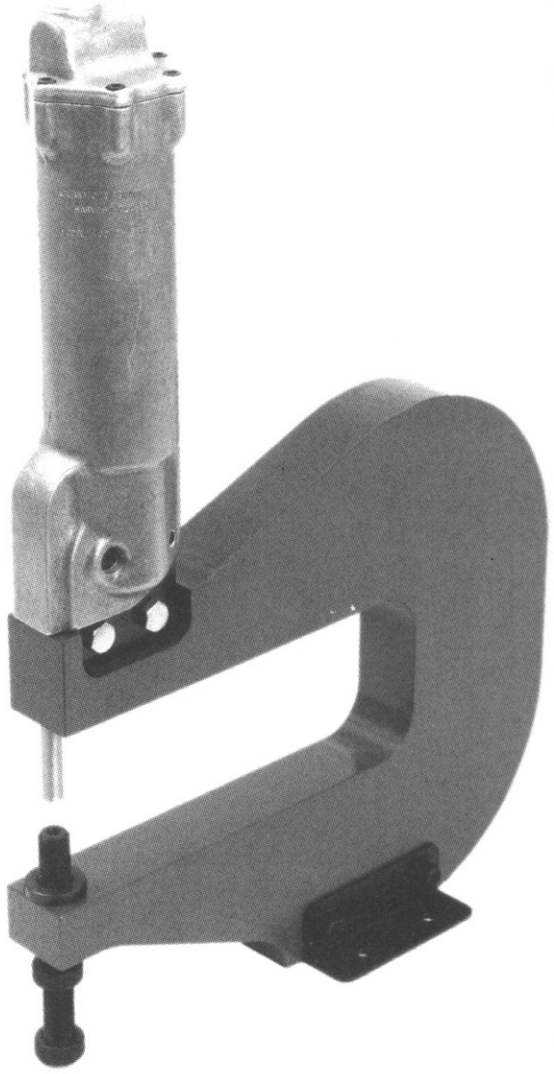

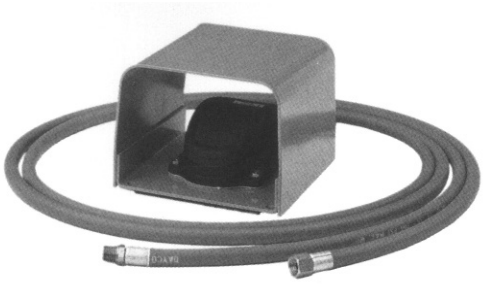

	Alu	Steel
Nietleistung Kalt-Niete (mm)	4,8 mm	4,0 mm
CAPACITY COLD RIVET (INCH)	3/16	5/32
max. Hub (mm)	14,3 mm	
MAX. TRAVEL (INCH)	9/16 "	
max. Druckkraft mit 6,21 bar	26,70 kn	
MAX. FORCE mit/with 90 P.S.I.	6000 lbs.	
max. Kraft ereicht am Hubende:	1,6 mm	
PART OF STROKE AT MAX. FORCE:	1/16"	
ca. Gewicht mit C-Bügel	28 kg	
APPR. WEIGHT WITH C -YOKE	62 lbs.	
Anschluß	1/4" NPT	
AIR INLET		
Bügel-Tiefe (innen)	254,0 mm	
YOKE-REACH	10"	
Bügel-Höhe (innen)	88,9 mm	
YOKE-GAP	3.1/2"	
Bügel-Stärke	41,3 mm	
YOKE-THICKNESS	1.5/8"	

Pneum. Nietpressen mit Fußschalter und C-Bügel für Tischmontage
FOOT CONTROL COMPRESSION RIVETERS - C TYPE - BENCH MODELS

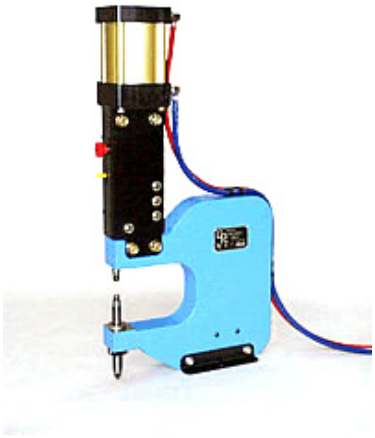

8000CS-6

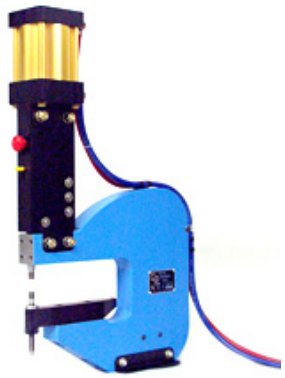

8000CSA-9.1/2

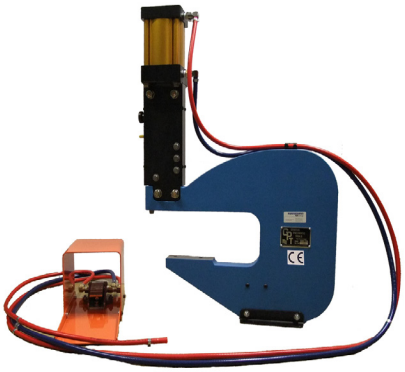

8000CSA-12.1/2



15KCSA-24.1/2

Standard Zubehör
Standard Accessoires
15KCSA & 8000CSA





Bodengestell inkl. Wartungseinheit
Pedestal Mounting
für/for Mod.
8000CS - 8000CSA - 15KCS - 15KCSA
(optional)





FC-4

Fußschalter
Schlauchlänge ca.
10 Ft. (3 Meter)
(im Lieferumfang)

Artikel-Nr. PART NUMBER	**max. Druckkraft bei 6,3 bar** MAX. FORCE AT 90 PSI	**Standard C-Bügel** STANDARD C-YOKES		**max. Nietdurchmesser** RIVET DIAMETER CAPACITIES		
		Ausladung REACH	**Höhe** GAP	**Vollniet Aluminium** SOLID ALUMINUM	**Vollniet Stahl** SOLID STEEL	**Rohrniet Stahl** TUBULAR STEEL
8000CS-6	8800 LBS (39 kN)	6" (152 mm)	5" (127 mm)	1/4" (6,4mm)	3/16" (4,8 mm)	5/16" (7,9mm)
8000CSA-9.1/2	8800 LBS (39 kN)	9.1/2" (241 mm)	5" (127 mm)	1/4" (6,4mm)	3/16" (4,8 mm)	5/16" (7,9 mm)
8000CSA-12.1/2	8800 LBS (39 kN)	12.1/2" (318 mm)	5" (127 mm)	1/4" (6,4mm)	3/16" (4,8 mm)	5/16" (7,9 mm)
8000CSA-24.1/2	8800 LBS (39 kN)	24.1/2" (622 mm)	5.3/4" (146 mm)	1/4" (6,4mm)	3/16" (4,8 mm)	5/16" (7,9 mm)
15KCS-6	15000 LBS (66 kN)	6" (152 mm)	5" (127 mm)	3/8" (9,53 mm)	5/16" (7,9mm)	3/8" (9,53 mm)
15KCSA-9.1/2	15000 LBS (66 kN)	9.1/2" (241 mm)	5" (127 mm)	3/8" (9,53 mm)	5/16" (7,9mm)	3/8" (9,53 mm)
15KCSA-12.1/2	15000 LBS (66 kN)	12.1/2" (318 mm)	5" (127 mm)	3/8" (9,53 mm)	5/16" (7,9mm)	3/8" (9,53 mm)
15KCSA-24.1/2	15000 LBS (66 kN)	24.1/2" (622 mm)	5.3/4" (146 mm)	3/8" (9,53 mm)	5/16" (7,9mm)	3/8" (9,53 mm)

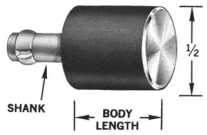

Schaftdurchmesser 4,76 mm
Shank Diameter 3/16"

FLACHE NIETEINSÄTZE FÜR SENKKOPFNIETE
RIVET SQUEEZER SETS, FLUSH-TYPE
NASM20426 / AN426 / LN 9199 / DIN 65399

Körperdurchmesser 12,7 mm / Body Diameter 1/2"

Länge 3,18 mm LENGTH 1/8"	Länge 6,35 mm LENGTH 1/4"	Länge 9,53 mm LENGTH 3/8"	Länge 12,7 mm LENGTH 1/2"	Länge 15,88 mm LENGTH 5/8"	Länge 19,05 mm LENGTH 3/4"
Art.Nr. / Part No.	**Art.Nr. / Part No.**	**Art.Nr. / Part No.**	**Art.Nr. / Part No.**	**Art.Nr. / Part No.**	**Art.Nr. / Part No.**
109AN	**109AP**	**109AR**	**109AS**	**109AT**	**109AW**

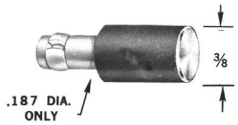

Schaftdurchmesser 4,76 mm
Shank Diameter 3/16"

FLACHE NIETEINSÄTZE
RIVET SQUEEZER SETS, FLUSH-TYPE
NASM20426 / AN426 / LN 9199 / DIN 65399

Körperdurchmesser 9,53 mm / Body Diameter 3/8"

Länge 3,18 mm LENGTH 1/8"	Länge 6,35 mm LENGTH 1/4"	Länge 9,53 mm LENGTH 3/8"	Länge 12,7 mm LENGTH 1/2"	Länge 15,88 mm LENGTH 5/8"	Länge 19,05 mm LENGTH 3/4"
Art.Nr. / Part No.	**Art.Nr. / Part No.**	**Art.Nr. / Part No.**	**Art.Nr. / Part No.**	**Art.Nr. / Part No.**	**Art.Nr. / Part No.**
109EN	**109EP**	**109ER**	**109ES**	**109ET**	**109EW**

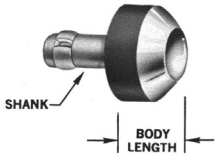

Nieteinsätze mit Kalotte, für Universal-Rundkopfniete
RIVET SQUEEZER SETS, CUPPED-TYPE
NASM20470 / AN470 / LN 9198 / DIN 65398

Schaftdurchmesser 4,76 mm / Shank Diameter 3/16"

Nutzlänge BODY LENGTH	Nietgröße 2,4 mm Rivet Size 3/32"	Nietgröße 3,2 mm Rivet Size 1/8"	Nietgröße 4,0 mm Rivet Size 5/32"	Nietgröße 4,8 mm Rivet Size 3/16"	Nietgröße 6,4 mm Rivet Size 1/4"
mm / Inch	**Art.Nr. / Part No.**	**Art.Nr. / Part No.**	**Art.Nr. / Part No.**	**Art.Nr. / Part No.**	**Art.Nr./Part No.**
3,18 / **1/8"**	**108AN-3/32"**	**108AN-1/8"**	**108AN-5/32"**	**108AN-3/16"**	
6,35 / **1/4"**	**108AP-3/32"**	**108AP-1/8"**	**108AP-5/32"**	**108AP-3/16"**	**108AP-1/4"**
9,53 / **3/8"**	**108AR-3/32"**	**108AR-1/8"**	**108AR-5/32"**	**108AR-3/16"**	**108AR-1/4"**
12,70 / **1/2"**	**108AS-3/32"**	**108AS-1/8"**	**108AS-5/32"**	**108AS-3/16"**	**108AS-1/4"**
15,88 / **5/8"**	**108AT-3/32"**	**108AT-1/8"**	**108AT-5/32"**	**108AT-3/16"**	
19,05 / **3/4"**	**108AW-3/32"**	**108AW-1/8"**	**108AW-5/32"**	**108AW-3/16"**	

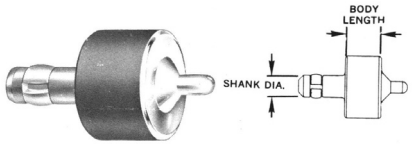

Warzeinsätze (Stempel) 100°
DIMPLE DIES (MALE) 100°
NASM20426 / AN426 / LN 9199 / DIN 65399

Schaftdurchmesser 4,76 mm / Shank Diameter 3/16"

Nutzlänge BODY LENGTH	Nietgröße 2,4 mm Rivet Size 3/32"	Nietgröße 3,2 mm Rivet Size 1/8"	Nietgröße 4,0 mm Rivet Size 5/32"	Nietgröße 4,8 mm Rivet Size 3/16"	Nietgröße 6,4 mm Rivet Size 1/4"
mm / Inch	**Art.Nr. / Part No.**	**Art.Nr. / Part No.**	**Art.Nr. / Part No.**	**Art.Nr. / Part No.**	**Art.Nr. / Part No.**
6,35 / **1/4"**	**206A3P**	**206A4P**	**206A5P**	**206A6P**	**206A8P**
9,53 / **3/8"**	**206A3R**	**206A4R**	**206A5R**	**206A6R**	**206A8R**

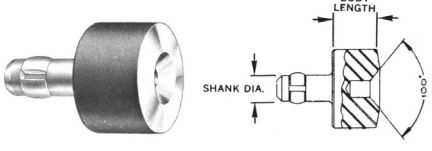

Warzeinsätze (Matritze) 100°
DIMPLE DIES (FEMALE) 100°
NASM20426 / AN426 / LN 9199 / DIN 65399

Schaftdurchmesser 4,76 mm / Shank Diameter 3/16"

Nietgröße 2,4 mm Rivet Size 3/32"	Nietgröße 3,2 mm Rivet Size 1/8"	Nietgröße 4,0 mm Rivet Size 5/32"	Nietgröße 4,8 mm Rivet Size 3/16"	Nietgröße 6,4 mm Rivet Size 1/4"
Art.Nr. / Part No. (ca. Länge/appr. Length)	**Art.Nr. / Part No.** (ca. Länge/appr. Length)	**Art.Nr. / Part No.** (ca. Länge/appr. Length)	**Art.Nr. / Part No.** (ca. Länge/appr. Length)	**Art.Nr. / Part No.** (ca. Länge/appr. Length)
207A3P (6,3 mm / 1/4")	**207A4P** (6,3 mm / 1/4")	**207A5P** (6,3 mm / 1/4")	**207A6P** (6,3 mm / 1/4")	**207A8P** (6,3 mm / 1/4")
207A3R (9,5 mm / 3/8")	**207A4R** (9,5 mm / 3/8")	**207A5R** (9,5 mm / 3/8")	**207A6R** (9,5 mm / 3/8")	**207A8R** (9,5 mm / 3/8")

Niet- und Warzeinsätze als Satz
RIVET SQUEEZER - AND DIMPLE DIE KITS

Nieteinsätze / RIVET SQUEEZER SETS



Schaftdurchmesser 4,76 mm
SHANK DIA 3/16" (.187)

Artikel-Nr. / PART NO.:

108A-33PC

Inhalt des Satzes / CONTENTS OF THE KIT:

1 Aufbewahrungskasten mit beschrifteteter Steckplatte
5 Nieteinsätze, flach mit 12,7 mm Durchmesser
5 Nieteinsätze, flach mit 9,53 mm Durchmesser
23 Nieteinsätze, Universal-Rundkopf in verschiedenen Längen.
Für Nietdurchm. 2,4 mm, 3,2 mm, 4,0 mm, 4,8 mm, 6,35 mm

1 KIT BOX WITH ENGRAVED KIT PLATE
5 RIVET SETS, FLUSH, DIAMETER 1/2"
5 RIVET SETS, FLUSH, DIAMETER 3/8"
23 RIVET SETS, CUPPED TYPE, IN DIFFERENT LENGTH,
FOR RIVET DIAMETER 3/32", 1/8", 5/32", 3/16" & 1/4"

Warz-Einsätze / DIMPLE DIES

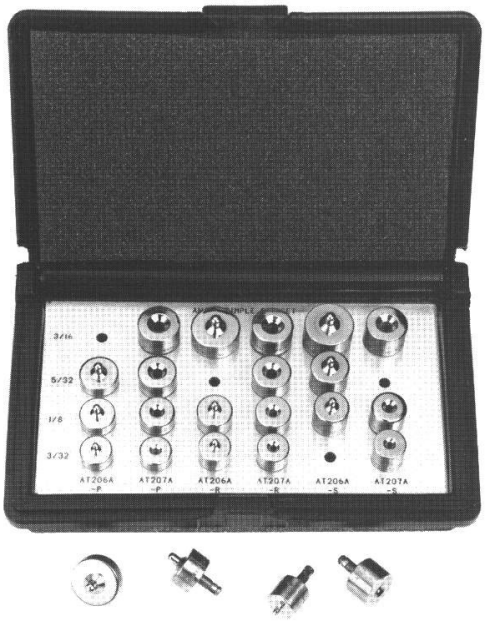

Schaftdurchmesser 4,76 mm
SHANK DIA 3/16" (.187)

Artikel-Nr. / PART NO.:

206A-24PC

Inhalt des Satzes / CONTENTS OF THE KIT:

1 Aufbewahrungskasten mit beschrifteteter Steckplatte
12 Paar Warzeinsätze,
in 3 Nutzlängen 6,35 mm, 9,53 mm, 12,7 mm.
Für Nietdurchm. 2,4 mm, 3,2 mm, 4,0 mm, 4,8 mm, 6,35 mm

1 KIT BOX WITH ENGRAVED KIT PLATE
12 PAIR MALE & FEMALE DIMPLE DIES,
WITH BODY LENGTH 1/4", 3/8" AND 1/2"
FOR RIVET DIAMETER 3/32", 1/8", 5/32", 3/16" & 1/4"

Pneumatische Nietfräse / PNEUMATIC RIVET SHAVER

Standard Ausführung, verstellbar in Stufen von 0,0127 mm, 15000 UPM (Fräser UPM),Gewinde 1/4"-28

STANDARD DUTY, ADJUSTEMENT IN .0005" INCREMENTS, 15000 RPM (CUTTER RPM), THREAD 1/4"-28



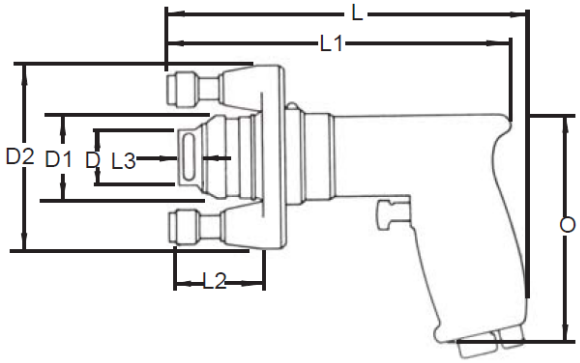

Artikel-Nr. Part No.	Fräsergröße Cutter Capacity	Gewicht Weight	D (max)	D1	D2	L	L1	L2	L3	O
ZT 706	15,88 mm **5/8"**	1,4 kg **3 lbs.**	28,6 mm **1.1/8"**	38,1 mm **1.1/2"**	102 mm **4"**	190 mm **7.1/2"**	162 mm **6.3/8"**	47,6 mm **1.7/8"**	9,53 mm **3/8"**	124 mm **4.7/8"**
ZT 706E	15,88 mm **5/8"**	1,4 kg **3 lbs.**	28,6 mm **1.1/8"**	38,1 mm **1.1/2"**	102 mm **4"**	199 mm **7.13/16"**	173 mm **6.13/16"**	57,2 mm **2.1/4"**	22,2 mm **7/8"**	124 mm **4.7/8"**

Pneumatische Nietfräse / PNEUMATIC RIVET SHAVER

Schwere Ausführung, verstellbar in Stufen von 0,0127 mm, 20000 UPM (Fräser UPM), Gewinde 1/4"-28

HEAVY DUTY, ADJUSTEMENT IN .0005" INCREMENTS, 20000 RPM (CUTTER RPM), THREAD 1/4"-28



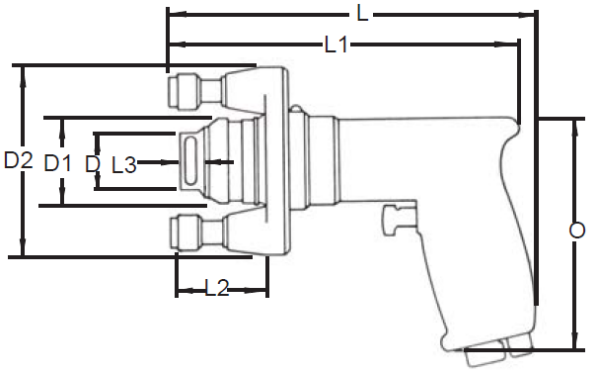

Artikel-Nr. Part No.	Fräsergröße Cutter Capacity	Gewicht Weight	D (max)	D1	D2	L	L1	L2	L3	O
ZT 405	31,75 mm **1.1/4"**	1,6 kg **3.1/2 lbs.**	34,9 mm **1.3/8"**	44,5 mm **1.3/4"**	102 mm **4"**	197 mm **7.3/4"**	176 mm **6.7/8"**	44,5 mm **1.3/4"**	9,53 mm **3/8"**	130 mm **5.1/8"**
ZT 405E	31,75 mm **1.1/4"**	1,6 kg **3.1/2 lbs.**	34,9 mm **1.3/8"**	44,5 mm **1.3/4"**	102 mm **4"**	206 mm 8.1/8“	184 mm 7.1/4“	57,2 mm 2.1/4“	22,2 mm 7/8“	130 mm 5.1/8

Spänekörbe und Stabilisatoren sind Sonderzubehör - Bitte extra bestellen.

Skirts and Stabilizer Assemblies are available as accessories - specify at time of order.

Stabilisator Stabilizer Assembly



Für Modell Nr. For Model No.	**Artikel Nr. für Stabilisator** Part No. for Stabilizer
ZT 706	**ZT 306055**
ZT 706E	**ZT 306060**
ZT 405	**ZT 405016**
ZT 405E	**ZT 405040**

Fräser-Größe Cutter Size	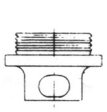 **ZT 706**	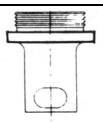 **ZT 706E**	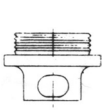 **ZT 405**	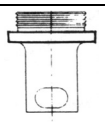 **ZT 405E**
	Artikel-Nr. Spänekorb SKIRT PART NO.			
1/4"	**ZT 306020**	**ZT 306040**		
5/16"	**ZT 306021**	**ZT 306041**		
3/8"	**ZT 306022**	**ZT 306042**	**ZT 405022**	**ZT 405052**
7/16"	**ZT 306023**	**ZT 306043**	**ZT 405023**	**ZT 405053**
1/2"	**ZT 306024**	**ZT 306044**	**ZT 405024**	**ZT 405054**
9/16"	**ZT 306025**	**ZT 306045**	**ZT 405025**	**ZT 405055**
5/8"	**ZT 306026**	**ZT 306046**	**ZT 405026**	**ZT 405056**
3/4"			**ZT 405027**	**ZT 405057**
7/8"			**ZT 405028**	**ZT 405058**
1"			**ZT 405029**	**ZT 405059**
1.1/8"			**ZT 405030**	**ZT 405060**
1.1/4"			**ZT 4050110**	**N/A**

Pneumatische Nietfräse / PNEUMATIC RIVET SHAVER



SRS10P21-8



SRS10S21-8

Standard Zubehör / STANDARD EQUIPMENT

Stützfuß / STABILIZER
Spänekorb / SKIRT 1/2" (12,7 mm) *

* falls nicht anders angegeben / If not other specified

Gewindeaufname / INTERNAL THREAD	**1/4"-28**
Luftdruck / AIR PRESSURE	6,2 Bar / 90 psi
Leistung / POWER	**1.0 HP / 0,75 kw**
max. Luftverbrauch / MAX .AIR CONSUMPTION	12 l/s / 25 cfm
max. Drehzahl / MAX. SPEED	**21000 UpM / rpm**
Gewicht / WEIGHT **(SRS10P)**	1,2 kg / 2,7 lbs
Gewicht / WEIGHT **(SRS10S)**	1,1 kg / 2,5 lbs
Luftanschluß / AIR INLET	1/4 NPT

Artikel Nr. Part No.	Artikel Nr. Part No.	Fräser-Durchmesser Cutter Diameter			 Spänekorb SKIRT	 Fräser CUTTER
Pistolen-Griff PISTOL GRIP	Gerade-Ausführung INLINE	Inch	mm		Artikel Nr. Part No.	Artikel Nr. Part No.
SRS10P21-5	**SRS10S21-5**	5/16	7,94		2925-5	ZT108-1
SRS10P21-6	**SRS10S21-6**	3/8	9,53		2925-6	ZT108-2
SRS10P21-7	**SRS10S21-7**	7/16	11,11		2925-7	ZT108-3
SRS10P21-8	**SRS10S21-8**	1/2	12,70		2925-8	ZT108-4
SRS10P21-9	**SRS10S21-9**	9/16	14,29		2925-9	ZT108-5
SRS10P21-10	**SRS10S21-10**	5/8	15,88		2925-10	ZT108-6
SRS10P21-12	**SRS10S21-12**	3/4	19,05		2925-12	ZT108-7



590L

Pneumatische Nietfräse mit Zubehör im Koffer

PNEUMATIC RIVET SHAVER KIT

Inhalt / CONTENS:

1 Nietfräse / RIVET SHAVER SRS10P21
inkl. Stützfuß / inkl. STABILIZER
7 Spänekörbe / Skirts (5/16", 3/8", 7/16", 1/2", 9/16", 5/8", 3/4")
7 Fräser / Cutter (5/16", 3/8", 7/16", 1/2", 9/16", 5/8", 3/4")

Artikel Nr. / PART NO.: **590L**

Pneumatische Nietfräse mit 102 mm langem Spänekorb
PNEUMATIC RIVET SHAVER WITH 4" EXTENDED SKIRT



Artikel.Nr. **Part No.**	max. Fräsergröße Cutter Capacity	Gewicht Weight	Länge Length	Fräsergeschwindigkeit Cutter Speed		Cutter Capacity Fräsergröße	Skirt No. Spänekorb Nr.
7387-RSE	12,70 mm **1/2"**	1,3 kg **2.87 lbs.**	273 mm **10.3/4"**	**18000 RPM/UPM**		**5/16"** / 7,94 mm **3/8"** / 9,53 mm **1/2"** / 12,70 mm	**3692** **3693** **3694**

Die Nietfräse wird, falls nicht anders angebenen, mit Standard-Spänekorb für 1/2" Fräser geliefert !
THE RIVET SHAVER COMES WITH STANDARD SKIRT FOR 1/2" CUTTERS, IF NOT OTHER SPECIFIED!



Planfräser, hartmetallbestückt
CUTTER, CARBIDE TIPPED

Gewinde/Thread 1/4"-28			**Gewinde/Thread 1/4"-26** (Für/For DESOUTTER)
Fräser-Durchmesser CUTTER DIAMETER		**Fräser - Artikel-Nr.** CUTTER - PART NO.	**Fräser - Artikel-Nr.** CUTTER - PART NO.
Inch	**mm**		
1/4"	6,35	**ZT 108-0**	
5/16"	7,94	**ZT 108-1**	**HP-5/16" x 1/4"-26**
3/8"	9,53	**ZT 108-2**	**HP-3/8" x 1/4"-26**
7/16"	11,11	**ZT 108-3**	**HP-7/16" x 1/4"-26**
1/2"	12,70	**ZT 108-4**	**HP-1/2" x 1/4"-26**
9/16"	14,29	**ZT 108-5**	
5/8"	15,88	**ZT 108-6**	
3/4"	19,05	**ZT 108-7**	
7/8"	22,23	**ZT 108-8**	
1"	25,40	**ZT 108-9**	
1.1/8"	28,58	**ZT 108-10**	
1.1/4"	31,75	**ZT 108-11**	

Pneumatische Schweißnahtfräse / PNEUMATIC WELD SHAVER

Zur Bearbeitung von Titan, Edelstahl, Monel und ähnlich hochfestem Material
Tiefeneinstellung in Stufen von 0,0254 mm. Fräser-Umdrehungen ca. 2700 UPM
FOR USE ON TITANIUM, STAINLESS STEEL, MONEL AND SIMILAR HIGH STRENGTH MATERIALS
DEPTH ADJUSTMENT IN INCREMENTS OF .001", CUTTER ROTATION APPR. 2700 RPM

ZT 708

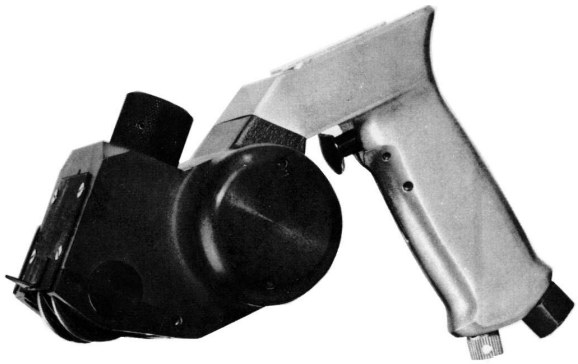

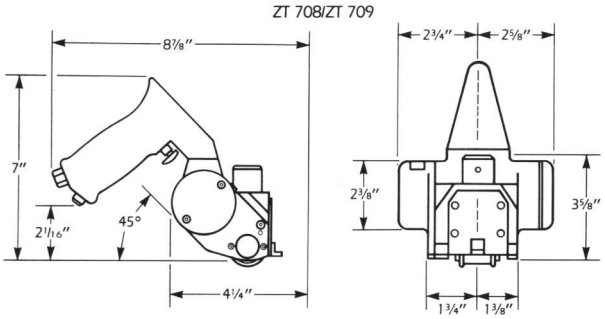

ca. 2,7 kg / appr. 6 lbs.

Entfernt Schweißnähte flächenbündig, oder in einer fest eingestellten Höhe.
Fräst Schweißnähte bis 22,3 mm Breite und 0,8 mm Höhe in einem Arbeitsgang.
REMOVE WELDS TO SURFACE PLANE OR TO A PRE-SELECTED HEIGHT.
SHAVE WELDS UP TO 7/8" WIDE BY 0.030 INCHES WITH ONE PASS.

Kpl. Rollenführung und Fräser gehören nicht zum Lieferumfang. Bitte bei Bedarf mitbestellen.
ROLLER ASSEMBLY AND CUTTERS ARE NOT FURNISHED WITH THE MACHINE. PLEASE SPECIFY AT TIME OF ORDER.

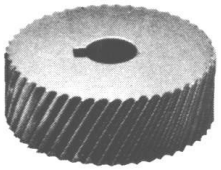

ZT 708
Hartmetall-Walzenfräser ohne Spanbrecher
CARBIDE CUTTER WITHOUT CHIPBREAKER

Artikel-Nr. PART NO.	**Durchmesser** DIAMETER	**Fräser Stärke** CUTTER WIDTH	**Zähne** TEETH	**Art. Nr. Rollenführung komplett** PART NO. ROLLER SHAFT ASSY
ZT 508-20B	**1.1/2"** (38,10 mm)	**1/2"** (12,70 mm)	**49**	**ZT 709041**
ZT 508-21B	**1.1/2"** (38,10 mm)	**3/4"** (19,05 mm)	**49**	**ZT 709042**
ZT 508-22B	**1.1/2"** (38,10 mm)	**3/8"** (9,53 mm)	**49**	**ZT 709040**

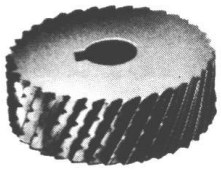

ZT708
Hartmetall-Walzenfräser mit Spanbrecher
CARBIDE CUTTER WITH CHIPBREAKER

Artikel-Nr. PART NO.	**Durchmesser** DIAMETER	**Fräser Stärke** CUTTER WIDTH	**Zähne** TEETH	**Art. Nr. Rollenführung komplett** PART NO. ROLLER SHAFT ASSY
ZT 508-26B	**1.1/2"** (38,10 mm)	**1/2"** (12,70 mm)	**49**	**ZT 709041**
ZT 508-27B	**1.1/2"** (38,10 mm)	**3/4"** (19,05 mm)	**49**	**ZT 709042**
ZT 508-28B	**1.1/2"** (38,10 mm)	**3/8"** (9,53 mm)	**49**	**ZT 709040**
ZT 508-29B	**1.1/2"** (38,10 mm)	**5/8"** (15,88 mm)	**49**	**ZT 709098**
ZT 508-30B	**1.1/2"** (38,10 mm)	**3/8"** (9,53 mm)	**65**	**ZT 709040**
ZT 508-35B	**1.1/2"** (38,10 mm)	**3/8"** (9,53 mm)	**36**	**ZT 709040**
ZT 508-36B	**1.1/2"** (38,10 mm)	**1/2"** (12,70 mm)	**36**	**ZT 709041**
ZT 508-37B	**1.1/2"** (38,10 mm)	**3/4"** (19,05 mm)	**36**	**ZT 709042**
ZT 508-38B	**1.1/2"** (38,10 mm)	**15/16"** (23,81 mm)	**49**	**ZT 708031**
ZT 708-20B	**1.1/2"** (38,10 mm)	**1"** (25,40 mm)	**49**	**ZT 709043**

Pneumatische Schweißnahtfräse / PNEUMATIC WELD SHAVER

Zur Bearbeitung von Aluminium, Magnesium, Kupfer und ähnlich weiche Metalle
Tiefeneinstellung in Stufen von 0,0254 mm. Fräser-Umdrehungen ca. 13500 UPM
FOR USE ON ALUMINUM, MAGNESIUM, COPPER AND SOFTER ALLOYS
DEPTH ADJUSTMENT IN INCREMENTS OF .001", CUTTER ROTATION APPR. 13500 RPM

ZT 709

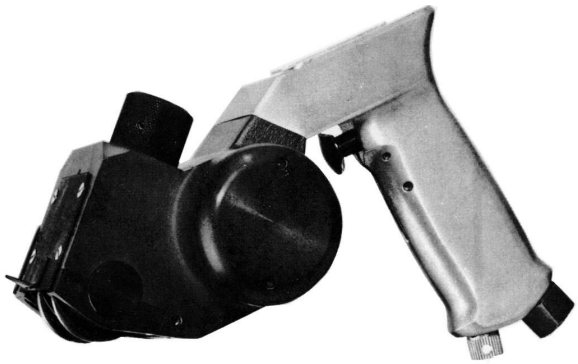

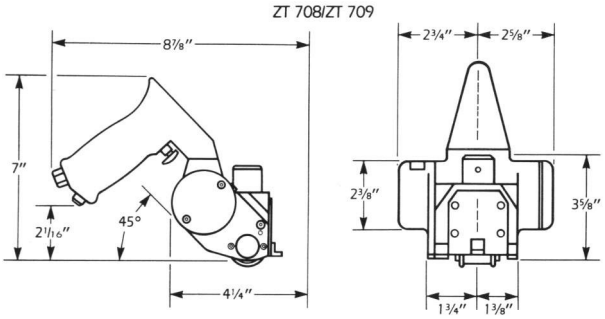

ca. 2,7 kg / appr. 6 lbs.

Entfernt Schweißnähte flächenbündig, oder in einer fest eingestellten Höhe.
Fräst Schweißnähte bis 22,3 mm Breite und 3,18 mm Höhe in einem Arbeitsgang, sowie Keilnuten.
REMOVE WELDS TO SURFACE PLANE OR TO A PRE-SELECTED HEIGHT.
SHAVE WELDS UP TO 7/8" WIDE BY 0.125 INCHES WITH ONE PASS AND ALSO GROOVES.

Kpl. Rollenführung und Fräser gehören nicht zum Lieferumfang. Bitte bei Bedarf mitbestellen.
ROLLER ASSEMBLY AND CUTTERS ARE NOT FURNISHED WITH THE MACHINE. PLEASE SPECIFY AT TIME OF ORDER.

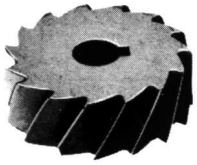

ZT 709
Walzenfräser
CUTTER

Artikel-Nr. PART NO.	**Fräser/**CUTTER **MATERIAL**	**Durchmesser** DIAMETER	**Fräser Stärke** CUTTER WIDTH	**Zähne** TEETH	**Rollenführung kpl.** ROLLER SHAFT ASSY **Art. Nr.** / PART NO.
ZT 509-20	**H.S.S.**	**1.1/2"** (38,10 mm)	**1/2"** (12,70 mm)	**15**	**ZT 709041**
ZT 509-21	**H.S.S.**	**1.1/2"** (38,10 mm)	**3/4"** (19,05 mm)	**15**	**ZT 709042**
ZT 509-22B	**VHM /** CARBIDE	**1.1/2"** (38,10 mm)	**1/2"** (12,70 mm)	**15**	**ZT 709041**
ZT 509-23B	**VHM /** CARBIDE	**1.1/2"** (38,10 mm)	**3/4"** (19,05 mm)	**15**	**ZT 709042**
ZT 509-24	**H.S.S.**	**1.1/2"** (38,10 mm)	**3/8"** (9,53 mm)	**15**	**ZT 709040**
ZT 509-25B	**VHM /** CARBIDE	**1.1/2"** (38,10 mm)	**3/8"** (9,53 mm)	**15**	**ZT 709040**
ZT 509-32B	**VHM /** CARBIDE	**1.1/2"** (38,10 mm)	**5/8"** (15,88 mm)	**15**	**ZT 709098**
ZT 509-37B	**VHM /** CARBIDE	**1.1/2"** (38,10 mm)	**1/2"** (12,70 mm)	**10**	**ZT 709041**
ZT 509-38B	**VHM /** CARBIDE	**1.1/2"** (38,10 mm)	**1"** (25,40 mm)	**15**	**ZT 709043**
ZT 509-39B	**VHM /** CARBIDE	**1.1/2"** (38,10 mm)	**3/4"** (19,05 mm)	**8**	**ZT 709042**

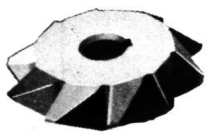

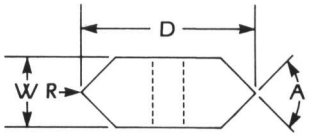

ZT 709
Nutenfräser
GROOVE -CUTTER

Artikel-Nr. PART NO.	**Fräser/**CUTTER **MATERIAL**	**Durchmesser** DIAMETER	**Fräser Stärke** CUTTER WIDTH	**Winkel** Angel	**Radius**	**Zähne** TEETH	**Rollenführung kpl.** ROLLER SHAFT ASSY **Art. Nr.** / PART NO.
ZT 509-33	**H.S.S.**	**1.1/2"** (38,10 mm)	**1/2"** (12,70 mm)	**75°**	**.046"** 1,17 mm	**10**	**ZT 709041**
ZT 509-36B	**HM-bestückt** CARBIDE TIP	**1.906"** (48,41 mm)	**1/2"** (12,70 mm)	**60°**	**.062"** 1,57 mm	**6**	**ZT 709041**
ZT 509-45B	**HM-bestückt** CARBIDE TIP	**1.687"** (42,85 mm)	**1/2"** (12,70 mm)	**88°**	**.062"** 1,57 mm	**6**	**ZT 709041**

Pneumatische Walzenfräse / PNEUMATIC SUPER SHAVER

Zur Bearbeitung von Titan, Edelstahl, Monel und ähnlichen hochfesten Nieten
Tiefeneinstellung in Stufen von 0,0127 mm. Fräser-Umdrehungen ca. 12000 UPM
FOR USE ON TITANIUM, STAINLESS STEEL, MONEL AND SIMILAR HIGH STRENGTH FASTENERS
DEPTH ADJUSTMENT IN INCREMENTS OF .0005", CUTTER ROTATION APPR. 12000 RPM

ZT 507 C

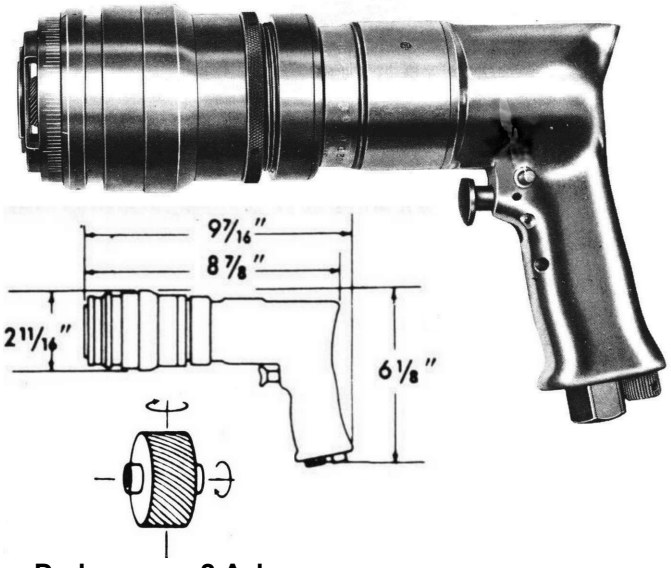

Drehung um 2 Achsen
Dual Rotating

STABILISATOR
STABILIZER

ZT 507053



Fräser, Fräserwelle, Fußstück und Stabilisator gehören nicht zum Lieferumfang. Bitte bei Bedarf mitbestellen.

Cutter, Cutter-Shaft, Footpiece and Stabilizer are not furnished with the machine.
If required, specify at time of order.

Fräser Stärke CUTTER WIDTH	**Art. Nr. Fräserwelle, komplett** PART NO. CUTTER SHAFT ASSY	**Art. Nr. Stahl-Fußstück** PART NO. STEEL FOOTPIECE	**Art. Nr. Nylon Fußstück** PART NO. NYLON FOOTPIECE
3/8" / 9,53 mm	**ZT 5070171**	**ZT 507084**	
7/16" / 11,11 mm	**ZT 5070172**	**ZT 507084**	
1/2" / 12,70 mm	**ZT 5070173**	**ZT 507029**	**ZT 507041**
3/4" / 19,05 mm	**ZT 5070174**	**ZT 507035**	**ZT 507055**

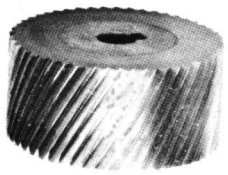

Hartmetall-Walzenfräser
CARBIDE CUTTER

Artikel-Nr. PART NO.	**Fräser Stärke** CUTTER WIDTH	**Zähne** TEETH	**Durchmesser** DIAMETER	**Spanbrecher** CHIP BREAKER	**Anwendungsbereich** APPLICATION
ZT 507-20B	**1/2" /** 12,70 mm	**49**	**1.1/8"** (28.58 mm)	NEIN / NO	Monel, Steel, Titanium
ZT 507-21B	**3/4" /** 19,05 mm	**49**	**1.1/8"** (28.58 mm)	NEIN / NO	Monel, Steel, Titanium
ZT 507-22B	**1/2" /** 12,70 mm	**25**	**1.1/8"** (28.58 mm)	NEIN / NO	Monel, Steel, Titanium, Jo-Bolt
ZT 507-23B	**3/8" /** 9,53 mm	**49**	**1.1/8"** (28.58 mm)	NEIN / NO	Monel, Steel, Titanium
ZT 507-24B	**1/2" /** 12,70 mm	**37**	**1.1/8"** (28.58 mm)	JA / YES	NACA, Straylar Rivet, Aluminum, Jo-Bolt
ZT 507-25B	**3/4" /** 19,05 mm	**37**	**1.1/8"** (28.58 mm)	JA / YES	NACA, Straylar Rivet, Aluminum, Jo-Bolt
ZT 507-26B	**3/8" /** 9,53 mm	**37**	**1.1/8"** (28.58 mm)	JA / YES	NACA, Straylar Rivet, Aluminum, Jo-Bolt
ZT 507-27B	**1/2" /** 12,70 mm	**25**	**1.1/8"** (28.58 mm)	NEIN / NO	A-286 Stainless Steel Rivet
ZT 507-28B	**3/4"/** 19,05 mm	**25**	**1.1/8"** (28.58 mm)	NEIN / NO	A-286 Stainless Steel Rivet
ZT 507-29B	**7/16"/**11,11 mm	**49**	**1.1/8"** (28.58 mm)	NEIN / NO	Monel, Steel, Titanium

Leichte pneumatische Schweißnahtfräse
LIGHT DUTY PNEUMATIC WELD SHAVER

Zur Bearbeitung von Aluminium, Magnesium, Kupfer und ähnlich weichen Metallen
Tiefeneinstellung in Stufen von 0,0127 mm. Fräser-Umdrehungen ca. 15000 UPM
FOR USE ON ALUMINUM, MAGNESIUM, COPPER AND SOFTER ALLOYS
DEPTH ADJUSTMENT IN INCREMENTS OF .0005" CUTTER ROTATION APPR. 15000 RPM

ZT 550

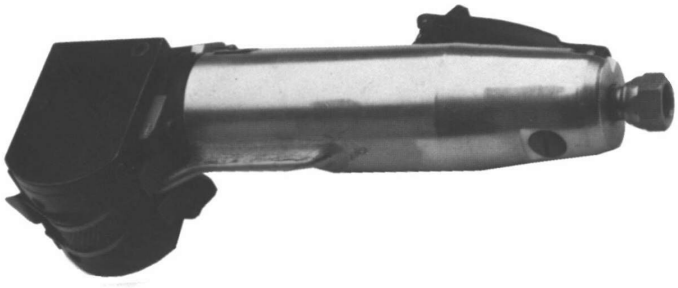

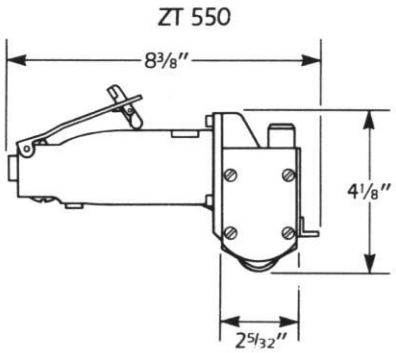

ca. 1,7 kg / appr. 3.3/4 lbs.

Entfernt Schweißnähte flächenbündig, oder in einer fest eingestellten Höhe.
Fräst Schweißnähte bis 12,7 mm Breite, sowie Keilnuten bis 9,53 mm Breite.
REMOVE WELDS TO SURFACE PLANE OR TO A PRE-SELECTED HEIGHT.
SHAVE WELDS UP TO 1/2" WIDE AND GROOVES UP TO 3/8".

Kpl. Rollenführung und Fräser gehören nicht zum Lieferumfang. Bitte bei Bedarf mitbestellen.
ROLLER ASSEMBLY AND CUTTERS ARE NOT FURNISHED WITH THE MACHINE. PLEASE SPECIFY AT TIME OF ORDER.



ZT 550
Walzenfräser
CUTTER

Artikel-Nr. PART NO.	**Fräser**/CUTTER **MATERIAL**	**Durchmesser** DIAMETER	**Fräser Stärke** CUTTER WIDTH	**Zähne** TEETH	**Rollenführung kpl.** ROLLER SHAFT ASSY **Art. Nr.** / PART NO.
ZT 550-21	**H.S.S.**	**1.1/8"** (28,58 mm)	**3/8"** (9,53 mm)	**10**	**ZT 550069**
ZT 550-23	**H.S.S.**	**1.1/8"** (28,58 mm)	**1/2"** (12,70 mm)	**10**	**ZT 550070**
ZT 550-30	**VHM** / CARBIDE	**1.1/8"** (28,58 mm)	**1/4"** (6,35 mm)	**10**	**ZT 550069**
ZT 550-31	**VHM** / CARBIDE	**1.1/8"** (28,58 mm)	**3/8"** (9,53 mm)	**10**	**ZT 550069**
ZT 550-32	**VHM** / CARBIDE	**1.1/8"** (28,58 mm)	**1/2"** (12,70 mm)	**10**	**ZT 550070**



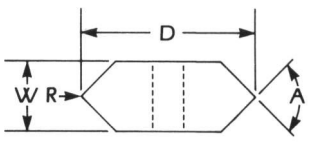

ZT 550
Nutenfräser
GROOVE -CUTTER

Artikel-Nr. PART NO.	**Fräser**/CUTTER **MATERIAL**	**Durchmesser** DIAMETER	**Fräser Stärke** CUTTER WIDTH	**Winkel** Angel	**Radius**	**Zähne** TEETH	**Rollenführung kpl.** ROLLER SHAFT ASSY **Art. Nr.** / PART NO.
ZT 550-29	**H.S.S.**	**1.5/16"** (33,34 mm)	**3/8"** (9,53 mm)	**60°**	**.062"** 1,57 mm	**6**	**ZT 550069**
ZT 550-40	**H.S.S.**	**1.31/64"** (37,70 mm)	**3/8"** (9,53 mm)	**40°**	**.062"** 1,57 mm	**8**	**ZT 550069**
ZT 550-41	**H.S.S.**	**1.5/16"** (33,34 mm)	**3/8"** (9,53 mm)	**40°**	**.062"** 1,57 mm	**6**	**ZT 550069**

Leichte pneumatische Schweißnahtfräse
LIGHT DUTY PNEUMATIC WELD SHAVER

Zur Bearbeitung von Titan, Edelstahl, Monel und ähnlich hochfestem Material
Tiefeneinstellung in Stufen von 0,0127 mm Fräser-Umdrehungen ca. 3500 UPM
FOR USE ON TITANIUM, STAINLESS STEEL, MONEL AND SIMILAR HIGH STRENGTH MATERIALS
DEPTH ADJUSTMENT IN INCREMENTS OF .0005", CUTTER ROTATION APPR. 3500 RPM

ZT 553

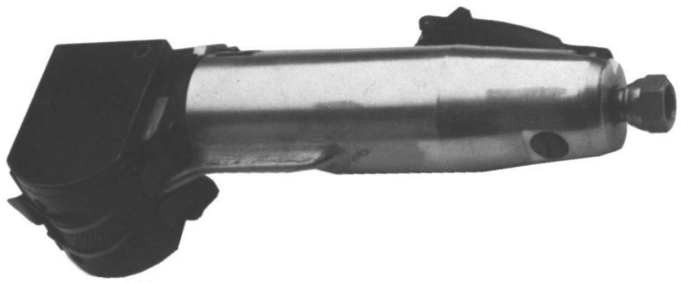

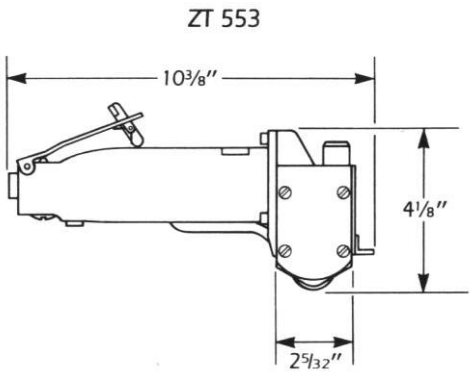

ca. 2,3 kg / appr. 5 lbs.

Entfernt Schweißnähte flächenbündig, oder in einer fest eingestellten Höhe.
Fräst Schweißnähte bis 12,7 mm Breite.
REMOVE WELDS TO SURFACE PLANE OR TO A PRE-SELECTED HEIGHT.
SHAVE WELDS UP TO 1/2" WIDE.

Kpl. Rollenführung und Fräser gehören nicht zum Lieferumfang. Bitte bei Bedarf mitbestellen.
ROLLER ASSEMBLY AND CUTTERS ARE NOT FURNISHED WITH THE MACHINE. PLEASE SPECIFY AT TIME OF ORDER.

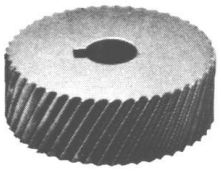

ZT 553
Hartmetall-Walzenfräser ohne Spanbrecher
CARBIDE CUTTER WITHOUT CHIPBREAKER

Artikel-Nr. PART NO.	**Fräser/**CUTTER **MATERIAL**	**Durchmesser** DIAMETER	**Fräser Stärke** CUTTER WIDTH	**Zähne** TEETH	**Rollenführung kpl.** ROLLER SHAFT ASSY **Art. Nr.** / PART NO.
ZT 553-26	**VHM /** CARBIDE	**1.1/8"** (28,58 mm)	**1/2"** (12,70 mm)	**34**	**ZT 550070**
ZT 553-28	**VHM /** CARBIDE	**1.1/8"** (28,58 mm)	**3/8"** (9,53 mm)	**34**	**ZT 550069**

Senk-Anschlaghalter für Drehzahlen bis max. 3000 UPM
MICRO-STOP-COUNTERSINKS FOR SPEEDS UP TO 3000 RPM

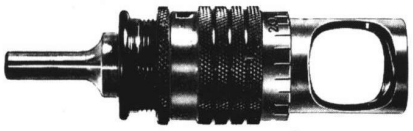

Länge / LENGTH 83 mm / **3.1/4"**
Verstellbar / INCREMENTS 0.025 mm/ **0.001"**
max. Hub / MAX. TRAVEL 7,14 mm / **9/32"**
Schaftdurchm. / SPINDLE DIA 6,35 mm **/ 1/4"**
Gewinde. / THREAD **1/4-28“**

Spänekörbe / SKIRTS

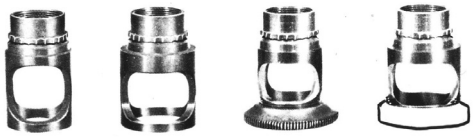

Art / TYPE :	**S**	**W**	**SP**	**WP**
Art.Nr. / PART NO.:	**ZT33004**	**ZT330015**	**ZT33005 ***	**ZT330013 ***

*** Ohne Stahl-/ oder Nylon-Ring / Without Steel-/or Nylon-Footplate**

Art **TYPE**	**Artikel-Nr.** PART-NO.	**Gewinde** THREAD	**max. Senkergröße** MAX. CUTTER DIA	**Art des Spänekorbs** TYPE OF SKIRT
S	**ZT 330-S**	**1/4"-28**	15,87 mm **/ 5/8"**	**Standard, Stahl** / STANDARD, STEEL
W	**ZT 330-W**	**1/4"-28**	19,05 mm **/ 3/4"**	**Glockenform, Stahl** / BELL-TYPE, STEEL
SP	**ZT 330-SP-S**	**1/4"-28**	15,87 mm **/ 5/8"**	**Stahl-Ring /** STEEL-FOOTPLATE
SP	**ZT 330-SP-N**	**1/4"-28**	15,87 mm **/ 5/8"**	**Nylon-Ring /** NYLON FOOTPLATE
WP	**ZT 330-WP-S**	**1/4"-28**	19,05 mm **/ 3/4"**	**Stahl-Ring /** STEEL-FOOTPLATE
WP	**ZT 330-WP-N**	**1/4"-28**	19,05 mm **/ 3/4"**	**Nylon-Ring /** NYLON FOOTPLATE
S	**ZT 330-S-M6x1**	**M6 x 1**	15,87 mm **/ 5/8"**	**Standard, Stahl** / STANDARD, STEEL
W	**ZT 330-W-M6x1**	**M6 x 1**	19,05 mm **/ 3/4"**	**Glockenform, Stahl** / BELL-TYPE, STEEL
SP	**ZT 330-SP-S-M6x1**	**M6 x 1**	15,87 mm **/ 5/8"**	**Stahl-Ring /** STEEL-FOOTPLATE
SP	**ZT 330-SP-N-M6x1**	**M6 x 1**	15,87 mm **/ 5/8"**	**Nylon-Ring /** NYLON FOOTPLATE
WP	**ZT 330-WP-S-M6x1**	**M6 x 1**	19,05 mm **/ 3/4"**	**Stahl-Ring /** STEEL-FOOTPLATE
WP	**ZT 330-WP-N-M6x1**	**M6 x 1**	19,05 mm **/ 3/4"**	**Nylon-Ring /** NYLON FOOTPLATE

	Stahl-Ring für "SP" Steel-Insert for "SP"	**Nylon-Ring für "SP"** Nylon-Insert for "SP"	**Stahl-Ring für "WP"** Steel-Insert for "WP"	**Nylon-Ring für "WP"** Nylon-Insert for "WP"
Artikel Nr./PART NO.:	**ZT 33006**	**ZT 330014**	**ZT 330010**	**ZT 330021**

Senk-Anschlaghalter für hohe Drehzahlen bis 10000 UPM
HIGH SPEED MICROSTOP COUNTERSINKS UP TO 10000 RPM

Für Senker mit Gewinde 1/4"-28, M6 X 1 oder M8 X 1
FOR COUNTERSINK CUTTERS THREADED 1/4"-28, M6 X 1 OR M8 X 1



444

Verstellbar / INCREMENTS 0.0127 mm / **0.0005"**
Max. Hub / MAX. TRAVEL 7,94 mm / **5/16"**

- *For high volume, accurate countersinking in a production environment*
- *Full ball bearing shaft support for increased life*
- *Heavy duty ball thrust bearing ensures depth repeatability*
- *Fail-safe design accomplished with integrated shoulder on shaft*
- *Debris filter prevents chips and dust from contaminating bearings*
- *.0005" depth adjustment, 5/16" shaft travel*
- *Right-hand threaded lock nut prevents jamming of adjustment mechanism*
- *Multiple skirt configuration options*
- *Multiple shaft configuration option*

Artikel-Nr. PART-NO.	**Gewinde** THREAD	**max. Senkergröße** MAX. CUTTER DIA	**Art des Spänekorbs** TYPE OF SKIRT
444S1	**1/4"-28**	19,05 mm **/ 3/4"**	**Standard, Stahl** / STANDARD, STEEL
444N1	**1/4"-28**	19,05 mm **/ 3/4"**	**Nylon-Ring** / NYLON INSERT
444H1	**1/4"-28**	19,05 mm **/ 3/4"**	**Nylon-Ring mit Flansch** / NYLON FLANGE INSERT
444S4	**M6 X 1**	19,05 mm **/ 3/4"**	**Standard, Stahl** / STANDARD, STEEL
444N4	**M6 X 1**	19,05 mm **/ 3/4"**	**Nylon-Ring** / NYLON INSERT
444H4	**M6 X 1**	19,05 mm **/ 3/4"**	**Nylon-Ring mit Flansch** / NYLON FLANGE INSERT
444S6	**M8 X 1**	19,05 mm **/ 3/4"**	**Standard, Stahl** / STANDARD, STEEL
444N6	**M8 X 1**	19,05 mm **/ 3/4"**	**Nylon-Ring** / NYLON INSERT
444H6	**M8 X 1**	19,05 mm **/ 3/4"**	**Nylon-Ring mit Flansch** / NYLON FLANGE INSERT
444D6	**M8 X 1**	25,40 mm **/ 1"**	**Glockenform, Stahl** / BELL-TYPE, STEEL

Auch mit Pendelschaft beziehbar

ALSO AVAILABLE WITH SWIVEL SHANK

Spähnekörbe / SKIRTS



S (444S)
Straight
3/4" Capacity



C (444C)
Close
5/16" Capacity



H (444H)
Nylon Flange Insert
3/4" Capacity



E (444E)
Straight Cutaway
3/4" Capacity



D (444D)
Bell
1" Capacity

EXTENDED SKIRTS:
2-3/4" Extension
(Includes extension shaft)



F (444F)
Flanged
3/4" Capacity



W (444W)
Flanged Bell
1" Capacity



LA (444LA)
10-32 Female Thread
1/4 ID X 3/8 OD



G (444G)
Flanged Cutaway
3/4" Capacity



J (444J)
.532 OD
.332 Capacity

LB (444LB)
1/4-28 Female Thread
5/16 ID X 7/16 OD



B (444B)
2-Legged
3/4" Capacity



K (444K)
.600 OD
.400 Capacity

LC (444LC)
1/4-28 Female Thread
3/8 ID X 1/2 OD



A (444A)
Phenolic Insert
3/4" Capacity



N (444N)
Nylon Insert
3/4" Capacity

LD (444LD)
1/4-28 Female Thread
5/8 ID X 3/4 OD

INSERTS

444-37P
Phenolic
OD .960

444-37N
Nylon
OD .960

444-37NF
Nylon
OD 1.25



Senk-Anschlaghalter für Drehzahlen bis max . 10000 UPM
MICRO-STOP-COUNTERSINKS FOR SPEEDS UP TO 10000 RPM

Heavy Duty High Speed Microstop Countersink Cage



ZT680

- .0005" incremental depth adjustment.
- 3/4" diameter cutter capacity
- 1/4" shaft travel with 1/4"-28 internally threaded shaft.
- RATED at 10,000 rpm

Works with all standard 1/4"x28 threaded cutters up to 3/4" in diameter.

ZT680 Footpiece Style Chart (to the part numbers below add the shaft style, QC, TF or no suffix.)

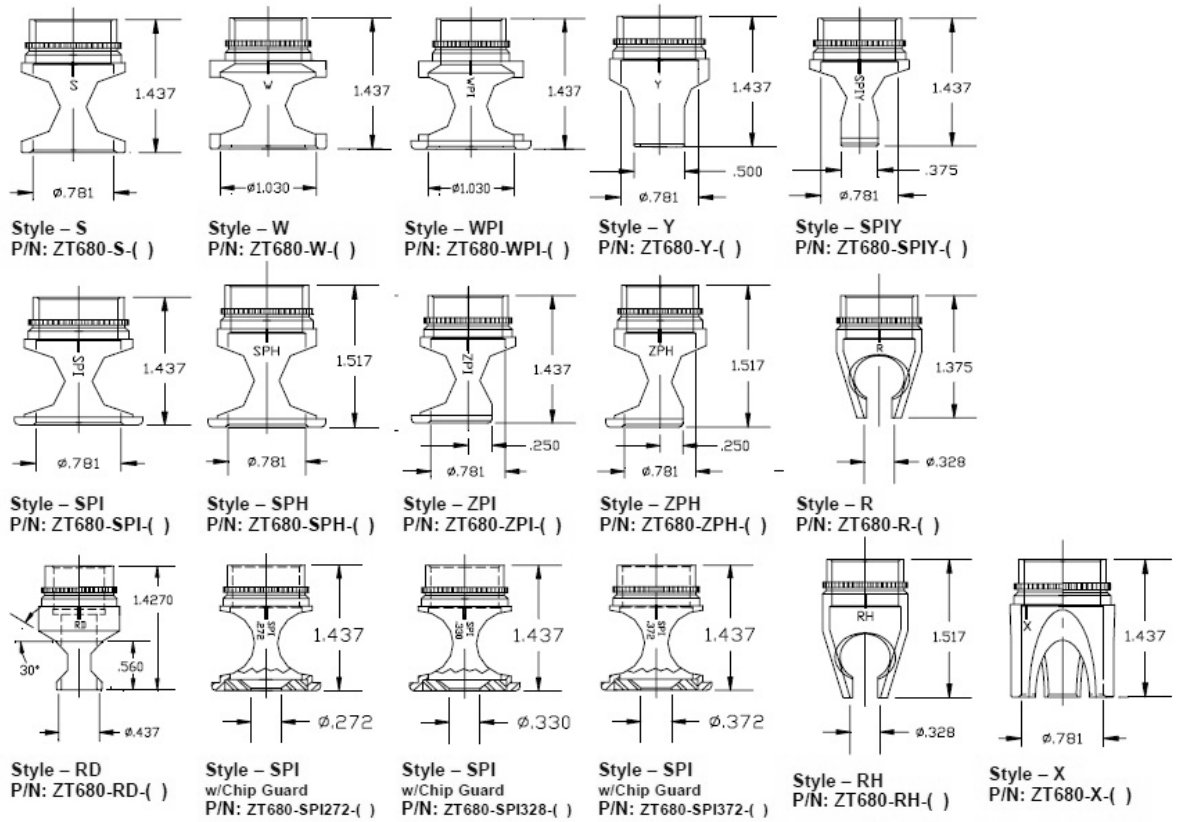

Style – S
P/N: ZT680-S-( )

Style – W
P/N: ZT680-W-( )

Style – WPI
P/N: ZT680-WPI-( )

Style – Y
P/N: ZT680-Y-( )

Style – SPIY
P/N: ZT680-SPIY-( )

Style – SPI
P/N: ZT680-SPI-( )

Style – SPH
P/N: ZT680-SPH-( )

Style – ZPI
P/N: ZT680-ZPI-( )

Style – ZPH
P/N: ZT680-ZPH-( )

Style – R
P/N: ZT680-R-( )

Style – RD
P/N: ZT680-RD-( )

Style – SPI
w/Chip Guard
P/N: ZT680-SPI272-( )

Style – SPI
w/Chip Guard
P/N: ZT680-SPI328-( )

Style – SPI
w/Chip Guard
P/N: ZT680-SPI372-( )

Style – RH
P/N: ZT680-RH-( )

Style – X
P/N: ZT680-X-( )

ZT680 Extended Nose Footpiece Style Chart

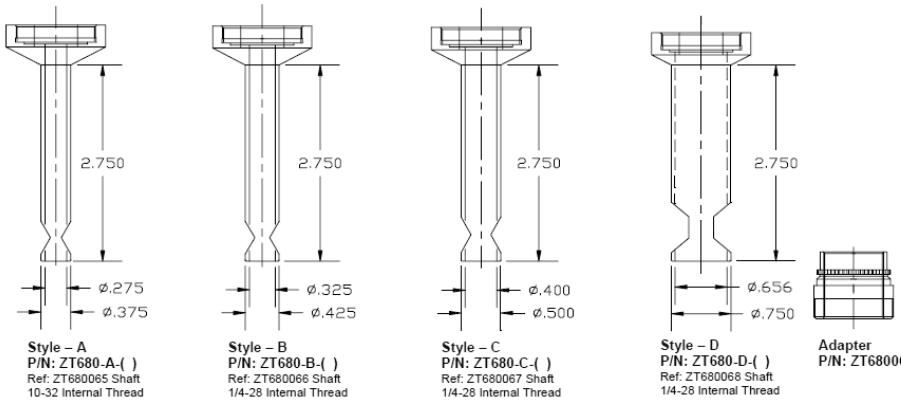

Style – A
P/N: ZT680-A-( )
Ref: ZT680065 Shaft
10-32 Internal Thread

Style – B
P/N: ZT680-B-( )
Ref: ZT680066 Shaft
1/4-28 Internal Thread

Style – C
P/N: ZT680-C-( )
Ref: ZT680067 Shaft
1/4-28 Internal Thread

Style – D
P/N: ZT680-D-( )
Ref: ZT680068 Shaft
1/4-28 Internal Thread

Adapter
P/N: ZT680060

Vacuum Footpiece



Style – SPV-N
PN: ZT680-SPV-N-( )

ZT6800116 Vacuum Footpiece
only incl. Nylon Footplate

How To Select The Proper Model Number

To select the proper ZT680 model number you only need to know two (2) things, the footpiece style and the drive shaft style. The information below will help you determined both.

ZT680 - ( ) - ( )

- Shaft Styles: "QC" Quick Change, "TF" 1/4" Three Flats, No Suffix 1/4" Round
- Footpiece Styles: (see footpiece chart below)
- ZEPHYR TOOL: Heavy Duty High Speed Microstop Cage

NOTE: The **ZT680060** adapter and the appropiate extended shaft are included on all extended nose cage assemblies. Should you wish to convert a standard ZT680 cage to a extended nose model, you will need to order the required nosepiece, the adapter and the appropiate extended shaft separately.

ALSO AVAILABLE WITH THREAD M6 X 1 OR M8 X 1 AND SWIVEL SHAFT
Auch mit M6 X 1 oder M8 X 1 Gewinde sowie Pendelschaft lieferbar

Micro-Stop Vakuum Adapter für ZT680S/-SPI
MICRO-STOP VACUUM ADAPTER FOR ZT680S/-SPI





Capacity 1"

(Senkanschlaghalter gehört nicht zum Lieferumfang)
(MICRO-STOP IS NOT INCLUDED)

ArtikelNr./ PART NO.:

EH2012

Senk-Anschlaghalter für Drehzahlen bis max. 3000 UPM
MICRO-STOP-COUNTERSINKS FOR SPEEDS UP TO 3000 RPM

JUMBO SIZE MICROSTOPS
FOR COUNTERSINK CUTTERS THREADED 3/8"-24 and 7/16"-20



432



462H3-1.3

- For production environment countersinking of larger sized holes
- Fail-safe design accomplished with integrated shoulder on shaft
- All shafts feature wrenching flats to aid in removal of cutter after use
- Ball thrust bearing ensures depth repeatability

Artikel-Nr. PART-NO.	**Gewinde** THREAD	**Verstellbar** INCREMENTS	**max. Senkergröße** Cutter Capacity	**Schaft** Shank	**max. Hub** MAX. TRAVEL	**Gesamtlänge** OAL
432A	7/16”-20	0,025 mm / .001	31,75 mm / 1-1/4”	3/8’’ Round	19,05 mm / 3/4”	178 mm / 7”
432B	3/8”-24	0,025 mm / .001	31,75 mm / 1-1/4”	3/8’’ Round	19,05 mm / 3/4”	178 mm / 7”
462	3/8”-24	0,075 mm / .003	22,23 mm / 7/8”	3/8’’ Round	19,05 mm / 3/4”	178 mm / 7”

Artikel-Nr. PART-NO.	**Gewinde** THREAD	**Verstellbar** INCREMENTS	**max. Senkergröße** Cutter Capacity	**Schaft** Shank	**max. Hub** MAX. TRAVEL	**Gesamtlänge** OAL
462H3-1.3	3/8”-24	0,013 mm / .0005	31,75 mm / 1-1/4”	3 Chuck Flat	19,05 mm / 3/4”	124 mm / 5”
462H3-1.5	3/8”-24	0,013 mm / .0005	34,92 mm / 1-3/8”	3 Chuck Flat	19,05 mm / 3/4”	124 mm / 5”
462H7-1.3	7/16”-20	0,013 mm / .0005	31,75 mm / 1-1/4”	3 Chuck Flat	19,05 mm / 3/4”	124 mm / 5”
462H7-1.5	7/16”-20	0,013 mm / .0005	34,92 mm / 1-3/8”	3 Chuck Flat	19,05 mm / 3/4”	124 mm / 5”

Senk-Anschlaghalter für Drehzahlen bis max. 3000 UPM
MICRO-STOP-COUNTERSINKS FOR SPEEDS UP TO 3000 RPM

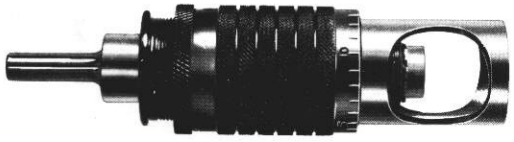

ZT331

Länge / LENGTH 151 mm / **5.15/16"**
Verstellbar / INCREMENTS 0.025 mm/**0.001"**
max. Hub / MAX. TRAVEL 12,7 mm / **1/2"**
Schaftdurchm. / SPINDLE DIA 7,94 mm **/ 5/16"**

Spänekörbe / SKIRTS



Art / TYPE :	**S**	**W**	**SP**	**WP**
Art.Nr. / PART NO.:	**ZT33104**	**ZT331017**	**ZT331021 ***	**ZT331023 ***

*** Ohne Stahl-/ oder Nylon-Ring / Without Steel-/or Nylon-Footplate**

Art TYPE	**Artikel-Nr.** PART-NO.	**Gewinde** THREAD	**max. Senkergröße** MAX. CUTTER DIA	**Art des Spänekorbs** TYPE OF SKIRT
S	**ZT 331-S**	**3/8"-24**	22,23 mm **/ 7/8"**	**Standard, Stahl** / STANDARD, STEEL
W	**ZT 331-W**	**3/8"-24**	34,93 mm **/ 1.3/8"**	**Glockenform, Stahl** / BELL-TYPE, STEEL
SP	**ZT 331-SP-S**	**3/8"-24**	22,23 mm **/ 7/8"**	**Stahl-Ring /** STEEL-FOOTPLATE
SP	**ZT 331-SP-N**	**3/8"-24**	22,23 mm **/ 7/8"**	**Nylon-Ring /** NYLON FOOTPLATE
WP	**ZT 331-WP-S**	**3/8"-24**	34,93 mm **/ 1.3/8"**	**Stahl-Ring /** STEEL-FOOTPLATE
WP	**ZT 331-WP-N**	**3/8"-24**	34,93 mm **/ 1.3/8"**	**Nylon-Ring /** NYLON FOOTPLATE

	Stahl-Ring für "SP" Steel-Insert for "SP"	**Nylon-Ring für "SP"** Nylon-Insert for "SP"	**Stahl-Ring für "WP"** Steel-Insert for "WP"	**Nylon-Ring für "WP"** Nylon-Insert for "WP"
Artikel Nr./PART NO.:	**ZT 331028**	**ZT 331022**	**ZT 331029**	**ZT 331024**

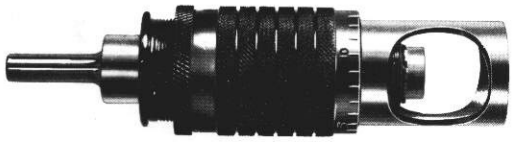

ZT334

Länge / LENGTH 151 mm / **5.15/16"**
Verstellbar / INCREMENTS 0.025 mm/**0.001"**
max. Hub / MAX. TRAVEL 12,7 mm / **1/2"**
Schaftdurchm. / SPINDLE DIA 7,94 mm **/ 5/16"**

Spänekörbe / SKIRTS



Art / TYPE :	**S**	**W**	**SP**	**WP**
Art.Nr. / PART NO.:	**ZT33104**	**ZT33402**	**ZT331021 ***	**ZT33406 ***

*** Ohne Stahl-/ oder Nylon-Ring / Without Steel-/or Nylon-Footplate**

Art TYPE	**Artikel-Nr.** PART-NO.	**Gewinde** THREAD	**max. Senkergröße** MAX. CUTTER DIA	**Art des Spänekorbs** TYPE OF SKIRT
S	**ZT 334-S**	**7/16"-20**	22,23 mm **/ 7/8"**	**Standard, Stahl** / STANDARD, STEEL
W	**ZT 334-W**	**7/16"-20**	38,10 mm **/ 1.1/2"**	**Glockenform, Stahl** / BELL-TYPE, STEEL
SP	**ZT 334-SP-S**	**7/16"-20**	22,23 mm **/ 7/8"**	**Stahl-Ring /** STEEL-FOOTPLATE
SP	**ZT 334-SP-N**	**7/16"-20**	22,23 mm **/ 7/8"**	**Nylon-Ring /** NYLON FOOTPLATE
WP	**ZT 334-WP-N**	**7/16"-20**	38,10 mm **/ 1.1/2"**	**Nylon-Ring /** NYLON FOOTPLATE

	Stahl-Ring für "SP" Steel-Insert for "SP"	**Nylon-Ring für "SP"** Nylon-Insert for "SP"	**Stahl-Ring für "WP"** Steel-Insert for "WP"	**Nylon-Ring für "WP"** Nylon-Insert for "WP"
Artikel Nr./PART NO.:	**ZT 331028**	**ZT 331022**	**------**	**ZT 33407**

Senk-Anschlaghalter für Drehzahlen bis max . 6000 UPM
MICRO-STOP-COUNTERSINKS FOR SPEEDS UP TO 6000 RPM

High Speed Precision Microstop Cage

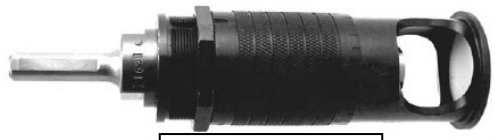

ZT691/ZT692

- .0005" incremental depth adjustment
- 1" to 2" cutter capacity
- Drive shafts are available with 3/8" round (no suffix), 3/8" round with three flats (-TF) recommended
- 7/16" shaft travel
- The internal thread for the ZT691 series is 3/8-24 and for the ZT692 series it is 7/16-20
- RATED at 6,000 rpm

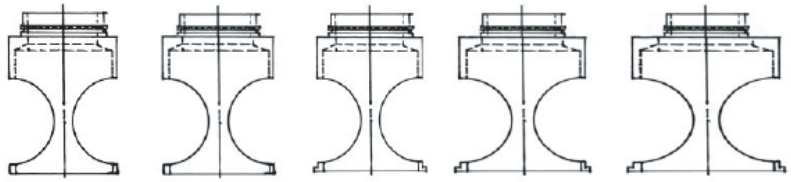

Model Number	Shaft Thread	Footpiece OD	Footpiece ID	Overall Length	Cutter Capacity
ZT691-S-TF	3/8-24	1.62	1.28	5.0	1.250
ZT691-SPI-TF					
ZT691-W-TF		1.75	1.531		1.500
ZT691-WPI-TF					
ZT692-S-TF	7/16-20	1.62	1.28		1.250
ZT692-SPI-TF					
ZT692-WPI-TF					

Anschlaghalter mit langem Hub
MICRO-STOP WITH LONG SHAFT TRAVEL



EH356HPV-26,5



EH356HP

Verstellbar / INCREMENTS 0,025 mm / **0.001“**
Schaftdurchm. / SPINDLE DIA 6,00 mm / **.2362**

Mit Pendelschaft / WITH SWIVEL SHAFT

Model Number	Gewinde THREAD	max. Senkergröße MAX. CUTTER DIA	HUB SHAFT TRAVEL	GESAMTLÄNGE Overall Length
EH356HP	M6 X 1	17 mm / **11/16”**	13 mm / .5188	130 mm / **5.1/8”**
EH356HP-26,5	M6 X 1	25,4 mm / **1”**	26,5 mm	175 mm / **6.57/64”**
EH356HPV-26,5 incl. Vacuum-Adapter	M6 X 1	25,4 mm / **1”**	26,5 mm	175 mm / **6.57/64”**

Senk-Anschlaghalter mit Pendelschaft
5° Differenz zwischen der Spindelachse und der Senkerachse
für hohe Drehzahlen bis 6000 UPM

HIGH SPEED MICROSTOP COUNTERSINKS WITH SWIVEL SHAFT
5° DIFFERENCE BETWEEN THE SPINDLE AXIS AND CUTTER AXIS
FOR SPEEDS UP TO 6000 RPM



ZT666 & ZT667 & ZT668

Länge / LENGTH 89 mm / **3.1/2"**
Verstellbar / INCREMENTS 0.025 mm / **0.001"**
max. Hub / MAX. TRAVEL 6,00 mm /**.2362"**
Schaftdurchm./SPINDLE DIA 6,00 mm **/ .2362"**

Spänekörbe / SKIRTS





Art/TYPE : **SP** **WP**
Art.Nr./PART NO. : **ZT666016 *** **ZT666021 ***

*** Ohne Stahl-/ oder Nylon-Ring / Without Steel-/or Nylon-Footplate**

Art **TYPE**	**Artikel-Nr.** PART-NO.	**Gewinde** THREAD	**max. Senkergröße** MAX. CUTTER DIA	**Art des Spänekorbs** TYPE OF SKIRT
SP	**ZT 666-SP-SI**	**M6 x 1**	14 mm **/ 9/16"**	**Stahl-Ring /** STEEL-FOOTPLATE
SP	**ZT 666-SP-NI**	**M6 x 1**	14 mm **/ 9/16"**	**Nylon-Ring /** NYLON FOOTPLATE
SP	**ZT 666-SP-SE**	**M6 x 1**	17 mm **/ 11/16"**	**Stahl-Ring /** STEEL-FOOTPLATE
SP	**ZT 666-SP-NE**	**M6 x 1**	17 mm **/ 11/16"**	**Nylon-Ring /** NYLON FOOTPLATE
WP	**ZT 666-WP-SE**	**M6 x 1**	21 mm **/ 13/16"**	**Stahl-Ring /** STEEL-FOOTPLATE
WP	**ZT 666-WP-NE**	**M6 x 1**	21 mm **/ 13/16"**	**Nylon-Ring /** NYLON FOOTPLATE
SP	**ZT 667-SP-SI**	**M8 x 1**	14 mm **/ 9/16"**	**Stahl-Ring /** STEEL-FOOTPLATE
SP	**ZT 667-SP-NI**	**M8 x 1**	14 mm **/ 9/16"**	**Nylon-Ring /** NYLON FOOTPLATE
SP	**ZT 667-SP-SE**	**M8 x 1**	17 mm **/ 11/16"**	**Stahl-Ring /** STEEL-FOOTPLATE
SP	**ZT 667-SP-NE**	**M8 x 1**	17 mm **/ 11/16"**	**Nylon-Ring /** NYLON FOOTPLATE
WP	**ZT 667-WP-SE**	**M8 x 1**	21 mm **/ 13/16"**	**Stahl-Ring /** STEEL-FOOTPLATE
WP	**ZT 667-WP-NE**	**M8 x 1**	21 mm **/ 13/16"**	**Nylon-Ring /** NYLON FOOTPLATE
SP	**ZT 668-SP-SI**	**1/4"-28**	14 mm **/ 9/16"**	**Stahl-Ring /** STEEL-FOOTPLATE
SP	**ZT 668-SP-NI**	**1/4"-28**	14 mm **/ 9/16"**	**Nylon-Ring /** NYLON FOOTPLATE
SP	**ZT 668-SP-SE**	**1/4"-28**	17 mm **/ 11/16"**	**Stahl-Ring /** STEEL-FOOTPLATE
SP	**ZT 668-SP-NE**	**1/4"-28**	17 mm **/ 11/16"**	**Nylon-Ring /** NYLON FOOTPLATE
WP	**ZT 668-WP-SE**	**1/4"-28**	21 mm **/ 13/16"**	**Stahl-Ring /** STEEL-FOOTPLATE
WP	**ZT 668-WP-NE**	**1/4"-28**	21 mm **/ 13/16"**	**Nylon-Ring /** NYLON FOOTPLATE

SI/NI für Innengewinde / FOR INTERNAL THREAD			**SE/NE für Außengewinde /** FOR EXTERNAL THREAD	
	Stahl-Ring/Steel-Footplate  **SI**	Nylon-Ring/Nylon-Footplate  **NI**	Stahl-Ring/Steel-Footplate  **SE**	Nylon-Ring/Nylon-Footplate  **NE**
Für Spänekorb: FOR SKIRT:	**Artikel Nr.** / PART NO. :	**Artikel Nr. /** PART NO. :	**Artikel Nr. /** PART NO. :	**Artikel Nr.** / PART NO. :
Type **-SP-**	**ZT 666017**	**ZT 666018**	**ZT 666019**	**ZT 666020**
Type **-WP-**	**-----**	**-----**	**ZT 666022**	**ZT 666023**

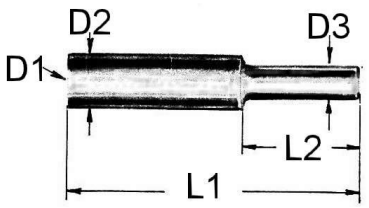

Halter mit Innengewinde
für Senker und Hohlfräser
HOLDER WITH INTERNAL THREAD
FOR COUNTERSINK CUTTERS AND HOLLOW CUTTERS

Artikel-Nr. PART NO.	**D1**	**L1**	**L2**	**D2**	**D3**
202 001	**M 6 x 1**	**22 mm** (0.866")	**8 mm** (0.315")	**10 mm** (0.394")	**4 mm** (0.158")
202 002	**M 6 x 1**	**32 mm** (1.260")	**15 mm** (0.591")	**10 mm** (0.394")	**6 mm** (0.236")
202 003	**1/4"- 28**	**32 mm** (1.260")	**15 mm** (0.591")	**10 mm** (0.394")	**6 mm** (0.236")
202 006	**M 6 x 1**	**50 mm** (1.969")	**20 mm** (0.787")	**10 mm** (0.394")	**6 mm** (0.236")
202 007	**1/4"- 28**	**50 mm** (1.969")	**20 mm** (0.787")	**10 mm** (0.394")	**6 mm** (0.236")
202 010	**M 8 x 1**	**50 mm** (1.969")	**20 mm** (0.787")	**12 mm** (0.472")	**6 mm** (0.236")
202 011	**3/8"-24**	**50 mm** (1.969")	**20 mm** (0.787")	**14 mm** (0.551")	**6 mm** (0.236")
202 034	**1/4"- 28**	**70 mm** (2.756")	**25 mm** (0.984")	**10 mm** (0.394")	**6 mm** (0.236")
202 036	**1/4"- 28**	**130 mm** (5.118")	**20 mm** (0.787")	**10 mm** (0.394")	**6 mm** (0.236")

SENKER FÜR *BRILES* NIETEN
COUNTERSINK CUTTER
FOR *BRILES* FASTENERS MS14218 (BACR15FV)

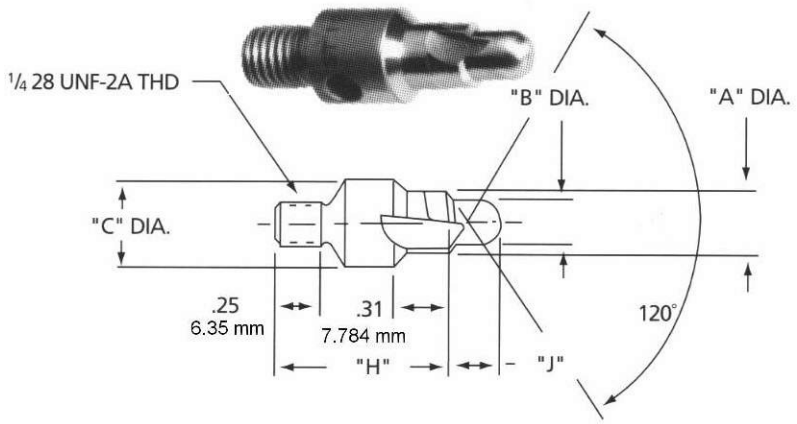

438BRC-....

Empfohlene Anschlaghalter Serie 444 oder ZT680
RECOMMENDED MICROSTOP SERIE 444 OR ZT680

Artikel-Nr. PART NO.	**Nietgröße** RIVET SIZE	**Gewinde** THREAD	**C**	**A**	**B**	**H**	**J**
438BRC-4	**1/8"** 3,18 mm	**1/4"-28**	**3/8"** 9,53 mm	**.1625** 4,13 mm	**.126** 3,20 mm	**.952** 24,18 mm	**.200** 5,08 mm
438BRC-5	**5/32"** 3,96 mm	**1/4"-28**	**3/8"** 9,53 mm	**.2105** 5,35 mm	**.159** 4,04 mm	**.955** 24,26 mm	**.220** 5,59 mm
438BRC-6	**3/16"** 4,76 mm	**1/4"-28**	**3/8"** 9,53 mm	**.2585** 6,57 mm	**.191** 4,85 mm	**.958** 24,33 mm	**.250** 6,35 mm
438BRC-7	**7/32"** 5,56 mm	**1/4"-28**	**3/8"** 9,53 mm	**.3125** 7,94 mm	**.226** 5,74 mm	**.962** 24,43 mm	**.280** 7,11 mm
438BRC-8	**1/4"** 6,35 mm	**1/4"-28**	**1/2"** 12,7 mm	**.3585** 9,11 mm	**.255** 6,48 mm	**.966** 24,54 mm	**.280** 7,11 mm

100° HSS - Senker
100° HSS - COUNTERSINK CUTTERS

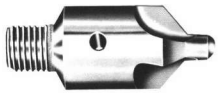

3- Schneiden, mit festem Führungszapfen, Gewinde 1/4"-28

3-FLUTES, WITH SOLID PILOT, THREAD 1/4"-28

Körper-Maß BODY-DIA.	6,35 mm **1/4"**	7,94 mm **5/16"**	9,53 mm **3/8"**	11,1 mm **7/16"**	12,7 mm **1/2"**	14,3 mm **9/16"**	15,9 mm **5/8"**
Zapfen-Maß PILOT DIA.	**Artikel-Nr.** PART NO.	**Artikel-Nr.** PART NO.	**Artikel-Nr.** PART NO.	**Artikel-Nr.** PART NO.	**Artikel-Nr.** PART NO.	**Artikel-Nr.** PART NO.	**Artikel-Nr.** PART NO.
	SPECIAL	**SPECIAL**	**SPECIAL**	**Standard**	**SPECIAL**	**SPECIAL**	**SPECIAL**
2,38 / **3/32"**	**420A4-3/32"**	**420B4-3/32"**	**420C4-3/32"**	**420D4-3/32"**	**420E4-3/32"**		
2,50 / **#40**	**420A4-#40**	**420B4-#40**	**420C4-#40**	**420D4-#40**	**420E4-#40**		
3,18 / **1/8"**	**420A4-1/8"**	**420B4-1/8"**	**420C4-1/8"**	**420D4-1/8"**	**420E4-1/8"**		
3,26 / **#30**	**420A4-#30**	**420B4-#30**	**420C4-#30**	**420D4-#30**	**420E4-#30**		
3,97 / **5/32"**			**420C4-5/32"**	**420D4-5/32"**	**420E4-5/32"**	**420F4-5/32"**	**420G4-5/32"**
4,04 / **#21**			**420C4-#21**	**420D4-#21**	**420E4-#21**	**420F4-#21**	**420G4-#21**
4,76 / **3/16"**				**420D4-3/16"**	**420E4-3/16"**	**420F4-3/16"**	**420G4-3/16"**
4,91 / **#10**				**420D4-#10**	**420E4-#10**	**420F4-#10**	**420G4-#10**
6,35 / **1/4"**				**420D4-1/4"**	**420E4-1/4"**	**420F4-1/4"**	**420G4-1/4"**

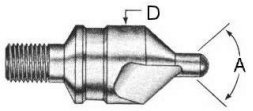

2- Schneiden, mit festem Führungszapfen, Gewinde 1/4"-28

2-FLUTES, WITH SOLID PILOT, THREAD 1/4"-28

Körper-Maß BODY-DIA.	6,35 mm **1/4"**	7,94 mm **5/16"**	9,53 mm **3/8"**	11,1 mm **7/16"**	12,7 mm **1/2"**	14,3 mm **9/16"**	15,9 mm **5/8"**
Zapfen-Maß PILOT DIA.	**Artikel-Nr.** PART NO.	**Artikel-Nr.** PART NO.	**Artikel-Nr.** PART NO.	**Artikel-Nr.** PART NO.	**Artikel-Nr.** PART NO.	**Artikel-Nr.** PART NO.	**Artikel-Nr.** PART NO.
	SPECIAL	**SPECIAL**	**SPECIAL**	**SPECIAL**	**Standard**	**SPECIAL**	**SPECIAL**
2,38 / **3/32"**	**445A4-3/32"**	**445B4-3/32"**	**445C4-3/32"**	**445D4-3/32"**	**445E4-3/32"**		
2,50 / **#40**	**445A4-#40**	**445B4-#40**	**445C4-#40**	**445D4-#40**	**445E4-#40**		
3,18 / **1/8"**	**445A4-1/8"**	**445B4-1/8"**	**445C4-1/8"**	**445D4-1/8"**	**445E4-1/8"**		
3,26 / **#30**	**445A4-#30**	**445B4-#30**	**445C4-#30**	**445D4-#30**	**445E4-#30**		
3,97 / **5/32"**			**445C4-5/32"**	**445D4-5/32"**	**445E4-5/32"**	**445F4-5/32"**	**445G4-5/32"**
4,04 / **#21**			**445C4-#21**	**445D4-#21**	**445E4-#21**	**445F4-#21**	**445G4-#21**
4,76 / **3/16"**				**445D-3/16"**	**445E4-3/16"**	**445F4-3/16"**	**445G4-3/16"**
4,91 / **#10**					**445E4-#10**	**445F4-#10**	**445G4-#10**
6,35 / **1/4"**					**445E4-1/4"**	**445F4-1/4"**	**445G4-1/4"**

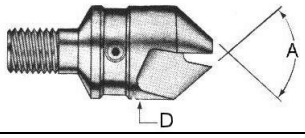

2- Schneiden, Gewinde 1/4"-28,
für auswechselbare Führungszapfen mit Schaft 2,18 mm
2-FLUTES, THREAD 1/4"-28,
FOR REPLACEABLE PILOTS WITH SHANK .086"

Körper-Maß BODY-DIA.	6,35 mm **1/4"**	7,94 mm **5/16"**	9,53 mm **3/8"**	11,1 mm **7/16"**	12,7 mm **1/2"**	14,3 mm **9/16"**	15,9 mm **5/8"**
	SPECIAL	**SPECIAL**	**Standard**	**Standard**	**Standard**	**SPECIAL**	**Standard**
Artikel-Nr. PART NO.	**455A-4**	**455B-4**	**455C-4**	**455D-4**	**455E-4**	**455F-4**	**455G-4**

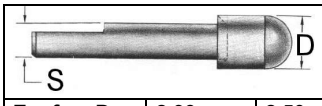

Führungszapfen mit Schaft 2,18 mm, für Senker "455..."
REPLACEABLE PILOTS WITH SHANK .086" FOR CUTTER "455..."

Zapfen=D PILOT =D	2,38 mm **3/32"**	2,50 mm **#40**	3,18 mm **1/8"**	3,26 mm **#30**	3,97 mm **5/32"**	4,04 mm **#21**	4,76 mm **3/16"**	4,85 mm **#11**	4,91 mm **#10**	5,56 mm **7/32"**	6,35 mm **1/4"**
Artikel-Nr. PART NO.	**484-56**	**484-2**	**484-57**	**484-12**	**484-59**	**484-21**	**484-61**	**484-31**	**484-32**	**484-63**	**484-65**

Andere Abmessungen und Winkel auf Anfrage / OTHER DIMENSION AND ANGLES ON REQUEST

100° HSCO - Senker mit Radius
100° COBALT - COUNTERSINK CUTTERS WITH RADIUS (M42)



Mit festem Führungszapfen und kleinem Radius

WITH SOLID PILOT AND SMALL RADIUS

Artikel-Nr. PART NO.	**Körper-Maß** BODY-DIA.	**Zapfen-Maß** PILOT DIA.	**Radius** (min.-max.)	**Gewinde** THREAD	**Schneiden** FLUTES
569 E 10 - 2.38	**10,0 mm** (.3937)	**2,38 mm** (.0938)	**0,3-0,5** (.0118-.0197)	**M6 x 1**	**2**
569 E 10 - 3.17	**10,0 mm** (.3937)	**3,17 mm** (.1240)	**0,6-0,9** (.0236-.0354)	**M6 x 1**	**2**
569 E 10 - 3.50	**10,0 mm** (.3937)	**3,50 mm** (.1378)	**0,6-0,9** (.0236-.0354)	**M6 x 1**	**2**
569 E 10 - 3.60	**10,0 mm** (.3937)	**3,60 mm** (.1417)	**0,6-0,9** (.0236-.0354)	**M6 x 1**	**2**
569 E 10 - 3.96	**10,0 mm** (.3937)	**3,96 mm** (.1559)	**0,6-0,9** (.0236-.0354)	**M6 x 1**	**2**
569 E 10 - 4.00	**10,0 mm** (.3937)	**4,00 mm** (.1575)	**0,6-0,9** (.0236-.0354)	**M6 x 1**	**2**
569 E 10 - 4.35	**10,0 mm** (.3937)	**4,35 mm** (.1713)	**0,6-0,9** (.0236-.0354)	**M6 x 1**	**2**
569 E 10 - 4.76	**10,0 mm** (.3937)	**4,76 mm** (.1874)	**0,6-0,9** (.0236-.0354)	**M6 x 1**	**2**
569 E 10 - 5.08	**10,0 mm** (.3937)	**5,08 mm** (.2000)	**0,6-0,9** (.0236-.0354)	**M6 x 1**	**2**
569 E 10 - 5.49	**10,0 mm** (.3937)	**5,49 mm** (.2161)	**0,6-0,9** (.0236-.0354)	**M6 x 1**	**2**

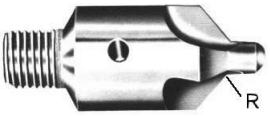

Mit festem Führungszapfen und kleinem Radius

WITH SOLID PILOT AND SMALL RADIUS

Artikel-Nr. PART NO.	**Körper-Maß** BODY-DIA.	**Zapfen-Maß** PILOT DIA.	**Radius** (min.-max.)	**Gewinde** THREAD	**Schneiden** FLUTES
575 E 14 - 4.76	**14,0 mm** (.5512)	**4,76 mm** (.1874)	**0,6-0,9** (.0236-.0354)	**M8 x 1**	**3**
575 E 14 - 5.00	**14,0 mm** (.5512)	**5,00 mm** (.1969)	**0,6-0,9** (.0236-.0354)	**M8 x 1**	**3**
575 E 14 - 5.60	**14,0 mm** (.5512)	**5,60 mm** (.2205)	**0,6-0,9** (.0236-.0354)	**M8 x 1**	**3**
575 E 14 - 6.00	**14,0 mm** (.5512)	**6,00 mm** (.2362)	**0,6-0,9** (.0236-.0354)	**M8 x 1**	**3**
575 E 14 - 6.27	**14,0 mm** (.5512)	**6,27 mm** (.2470)	**0,6-0,9** (.0236-.0354)	**M8 x 1**	**3**
575 E 14 - 6.65	**14,0 mm** (.5512)	**6,65 mm** (.2618)	**0,6-0,9** (.0236-.0354)	**M8 x 1**	**3**
575 E 14 - 7.08	**14,0 mm** (.5512)	**7,08 mm** (.2787)	**0,6-0,9** (.0236-.0354)	**M8 x 1**	**3**
575 E 14 - 7.84	**14,0 mm** (.5512)	**7,84 mm** (.3087)	**0,6-0,9** (.0236-.0354)	**M8 x 1**	**3**
575 E 14 - 8.25	**14,0 mm** (.5512)	**8,25 mm** (.3248)	**0,6-0,9** (.0236-.0354)	**M8 x 1**	**3**
575 E 14 - 8.63	**14,0 mm** (.5512)	**8,63 mm** (.3398)	**0,6-0,9** (.0236-.0354)	**M8 x 1**	**3**
575 E 14 - 9.04	**14,0 mm** (.5512)	**9,04 mm** (.3559)	**0,6-0,9** (.0236-.0354)	**M8 x 1**	**3**
575 E 17 - 6.27	**17,0 mm** (.6693)	**6,27 mm** (.2470)	**0,6-0,9** (.0236-.0354)	**M8 x 1**	**3**
575 E 17 - 6.65	**17,0 mm** (.6693)	**6,67 mm** (.2626)	**0,6-0,9** (.0236-.0354)	**M8 x 1**	**3**
575 E 17 - 7.08	**17,0 mm** (.6693)	**7,05 mm** (.2776)	**0,6-0,9** (.0236-.0354)	**M8 x 1**	**3**
575 E 17 - 9.42	**17,0 mm** (.6693)	**9,42 mm** (.3709)	**0,6-0,9** (.0236-.0354)	**M8 x 1**	**3**
575 E 17 - 9.82	**17,0 mm** (.6693)	**9,82 mm** (.3866)	**0,6-0,9** (.0236-.0354)	**M8 x 1**	**3**
575 E 17 - 10.21	**17,0 mm** (.6693)	**10,21 mm** (.4020)	**0,6-0,9** (.0236-.0354)	**M8 x 1**	**3**
575 E 17 - 10.61	**17,0 mm** (.6693)	**10,61 mm** (.4177)	**0,6-0,9** (.0236-.0354)	**M8 x 1**	**3**

Andere Abmessungen und Winkel auf Anfrage / OTHER DIMENSION AND ANGLES ON REQUEST

100° HSS-E (HSCO) Senker
100° COBALT - COUNTERSINK CUTTERS (M42)



Für auswechselbare Führungszapfen

FOR REPLACEABLE PILOTS

Artikel-Nr. PART NO.	**Körper-Maß** BODY-DIA.	**Bohrung** PILOT HOLE	**Gewinde** THREAD	**Schneiden** FLUTES
MBBN549A-10x2,0-2HSS-E	**10,0 mm** (.3937)	**2,0 mm** (.0787)	**M6 x 1**	**2**
MBBN549A-10x2,5-2HSS-E	**10,0 mm** (.3937)	**2,5 mm** (.0984)	**M6 x 1**	**2**
MBBN549A-10x3,5-2HSS-E	**10,0 mm** (.3937)	**3,5 mm** (.1378)	**M6 x 1**	**2**
MBBN549A-14x3,5-2HSS-E	**14,0 mm** (.5512)	**3,5 mm** (.1378)	**M8 x 1**	**2**
MBBN549A-14x4,0-2HSS-E	**14,0 mm** (.5512)	**4,0 mm** (.1575)	**M8 x 1**	**2**

100°/60° HSS-E (HSCO) - Hi-Lok Senker
100°/60° COBALT - HI-LOK COUNTERSINK CUTTERS (M42)



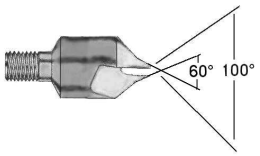

2 Schneiden,
für auswechselbare Führungszapfen
2 Schneidwinkel 100° + 60°

2 FLUTES,
FOR REPLACEABLE PILOTS
2 CUTTING ANGELES 100° + 60°

Artikel-Nr. (ohne Führungszapfen !) PART NO. (WITHOUT PILOT !)	**Körper-Maß** BODY-DIA.	**Bohrung** PILOT HOLE	**Gewinde** THREAD
MBBN549C-10x2,5-2HSS-E	**10,0 mm** (.3937)	**2,5 mm** (.0984)	**M6 x 1**
MBBN549C-10x3,5-2HSS-E	**10,0 mm** (.3937)	**3,5 mm** (.1378)	**M6 x 1**
MBBN549C-14x4,0-2HSS-E	**14,0 mm** (.5512)	**4,0 mm** (.1575)	**M8 x 1**

Artikel-Nr. (inkl. 1 Führungszapfen !) PART NO. (incl. 1 Pilot !)	**Körper-Maß** BODY-DIA.	**Bohrung** PILOT HOLE	**Zapfenmaß** PILOT DIA.	**Gewinde** THREAD
MBBN549C-10x2,5-2HSS-E-2,5 x 4,05 (REP9-4,07x2,5x4,05)	**10,0 mm** (.3937)	**2,5 mm** (.0984)	**4,05 mm** (.1594)	**M6 x 1**
MBBN549C-10x3,5-2HSS-E-3,5 x 4,71 (REP10-4,73x3,5x4,71)	**10,0 mm** (.3937)	**3,5 mm** (.1378)	**4,71 mm** (.1854)	**M6 x 1**
MBBN549C-14x4,0-2HSS-E-4,0 x 6,24 (REP11-6,26x4,0x6,24)	**14,0 mm** (.5512)	**4,0 mm** (.1575)	**6,24 mm** (.2457)	**M8 x 1**

Andere Abmessungen und Winkel auf Anfrage / OTHER DIMENSION AND ANGLES ON REQUEST

100° Voll-Hartmetall-Senker
100° SOLID CARBIDE STOP COUNTERSINK CUTTERS



Für auswechselbare Führungszapfen (aufgelöteter Kopf aus VHM)
FOR REPLACEABLE PILOTS (SOLID CARBIDE HEAD)

Artikel-Nr. PART NO.	**Körper-Maß** BODY-DIA.	**Bohrung** PILOT HOLE	**Gewinde** THREAD	**Schneiden** FLUTES
MBBN549B-10x2,0-3K10	**10,0 mm** (.3937)	**2,0 mm** (.0787)	**M6 x 1**	**3**
MBBN549B-10x2,5-3K10	**10,0 mm** (.3937)	**2,5 mm** (.0984)	**M6 x 1**	**3**
MBBN549B-10x3,5-3K10	**10,0 mm** (.3937)	**3,5 mm** (.1378)	**M6 x 1**	**3**
MBBN549B-10x4,0-3K10	**10,0 mm** (.3937)	**4,0 mm** (.1575)	**M6 x 1**	**3**

100° Hartmetall-bestückte-Senker
100° CARBIDE TIPPED STOP COUNTERSINK CUTTERS



Für auswechselbare Führungszapfen

FOR REPLACEABLE PILOTS

Artikel-Nr. PART NO.	**Körper-Maß** BODY-DIA.	**Bohrung** PILOT HOLE	**Gewinde** THREAD	**Schneiden** FLUTES
MBBN549B-14x2,5-3K10	**14,0 mm** (.3937)	**2,5 mm** (.0984)	**M8 x 1**	**3**
MBBN549B-14x4,0-3K10	**14,0 mm** (.3937)	**4,0 mm** (.1575)	**M8 x 1**	**3**
MBBN549B-17x5,0-3K10	**17,0 mm** (.4802)	**5,0 mm** (.1969)	**M8 x 1**	**3**
MBBN549B-21x5,0-3K10	**21,0 mm** (.8268)	**5,0 mm** (.1969)	**M8 x 1**	**3**



Führungszapfen für Senker MBBN549...
REPLACEABLE PILOTS FOR CUTTER MBBN549...
Standard Kombinationen/STANDARD COMBINATIONS

D **S** **=**	**2,0 mm** (.0787)	**2,5 mm** (.0984)	**3,5mm** (.1378)	**4,0 mm** (.1575)	**5,0 mm** (.1969)
2,38 mm (.0937)	MBBN549-2,0x2,38				
2,40 mm (.0945)	MBBN549-2,0x2,40				
2,50 mm (.0984)	MBBN549-2,0x2,50				
3,00 mm (.1181)	MBBN549-2,0x3,00	MBBN549-2,5x3,00			
3,17 mm (.1248)		MBBN549-2,5x3,17			
3,20 mm (.1260)	MBBN549-2,0x3,20				
3,50 mm (.1378)		MBBN549-2,5x3,50			
3,80 mm (.1496)		MBBN549-2,5x3,80			
4,00 mm (.1575)	MBBN549-2,0x4,00	MBBN549-2,5x4,00	MBBN549-3,5x4,00		
4,05 mm (.1594)		MBBN549-2,5x4,05			
4,17 mm (.1642)		MBBN549-2,5x4,17	MBBN549-3,5x4,17		
4,71 mm (.1854)			MBBN549-3,5x4,71		
4,76 mm (.1874)	MBBN549-2,0x4,76		MBBN549-3,5x4,76	MBBN549-4,0x4,76	
4,80 mm (.1890)			MBBN549-3,5x4,80		
4,83 mm (.1902)			MBBN549-3,5x4,83	MBBN549-4,0x4,83	
5,10 mm (.2008)			MBBN549-3,5x5,10		
5,60 mm (.2205)			MBBN549-3,5x5,60		
6,00 mm (.2362)			MBBN549-3,5x6,00		
6,24 mm (.2457)				MBBN549-4,0x6,24	
6,27 mm (.2469)					MBBN549-5,0x6,27
6,35 mm (.2500)	MBBN549-2,0x6,35		MBBN549-3,5x6,35	MBBN549-4,0x6,35	
6,67 mm (.2626)					MBBN549-5,0x6,67
6,70 mm (.2638)			MBBN549-3,5x6,70		
7,05 mm (.2776)					MBBN549-5,0x7,05
7,92 mm (.3118)					MBBN549-5,0x7,92
8,00 mm (.3150)				MBBN549-4,0x8,00	
9,52 mm (.3748)					MBBN549-5,0x9,52

Andere Abmessungen und Winkel auf Anfrage / OTHER DIMENSION AND ANGLES ON REQUEST

100° Voll-Hartmetall-Senker

100° SOLID CARBIDE STOP COUNTERSINK CUTTERS

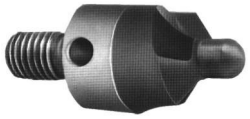

2- Schneiden, mit festem Führungszapfen
mit aufgelötetem VHM-Kopf
2-FLUTES, WITH SOLID PILOT
SOLID CARBIDE HEAD BRAZED TO STEEL SHANK

Körper-Maß BODY-DIA.	11,1 mm **7/16"**	12,7 mm **1/2"**	15,9 mm **5/8"**	19,1 mm **3/4"**	22,3 mm **7/8"**	25,4 mm **1"**
Gewinde THREAD	**1/4"-28**	**1/4"-28**	**1/4"-28**	**3/8"-24**	**3/8"-24**	**3/8"-24**
Zapfen-Maß PILOT DIA.	**Artikel-Nr.** PART NO.	**Artikel-Nr.** PART NO.	**Artikel-Nr.** PART NO.	**Artikel-Nr.** PART NO.	**Artikel-Nr.** PART NO.	**Artikel-Nr.** PART NO.
2,38 / **3/32"**	**151-2SC-3/32"**	**152-2SC-3/32"**				
2,50 / **#40**	**151-2SC-40**	**152-2SC-40**				
3,18 / **1/8"**	**151-2SC-1/8"**	**152-2SC-1/8"**				
3,26 / **#30**	**151-2SC-30**	**152-2SC-30**				
3,97 / **5/32"**	**151-2SC-5/32"**	**152-2SC-5/32"**	**153-2SC-5/32"**			
4,04 / **#21**	**151-2SC-21**	**152-2SC-21**	**153-2SC-21**			
4,76 / **3/16"**	**151-2SC-3/16"**	**152-2SC-3/16"**	**153-2SC-3/16"**			
4,85 / **#11**		**152-2SC-11**	**153-2SC-11**			
4,91 / **#10**		**152-2SC-10**	**153-2SC-10**			
6,35 / **1/4"**		**152-2SC-1/4"**	**153-2SC-1/4"**	**155-2SC-1/4"**	**156-2SC-1/4"**	**157-2SC-1/4"**
7,94 / **5/16"**			**153-2SC-5/16"**	**155-2SC-5/16"**	**156-2SC-5/16"**	**157-2SC-5/16"**
9,53 / **3/8"**				**155-2SC-3/8"**	**156-2SC-3/8"**	**157-2SC-3/8"**
11,11/ **7/16"**					**156-2SC-7/16"**	**157-2SC-7/16"**
12,70/ **1/2"**						**157-2SC-1/2"**

100° Hartmetall-bestückte-Senker

100° CARBIDE TIPPED STOP COUNTERSINK CUTTERS

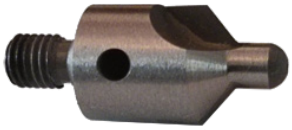

2- Schneiden, mit festem Führungszapfen
2-FLUTES, WITH SOLID PILOT

Körper-Maß BODY-DIA.	11,1 mm **7/16"**	12,7 mm **1/2"**	15,9 mm **5/8"**	19,1 mm **3/4"**	22,3 mm **7/8"**	25,4 mm **1"**
Gewinde THREAD	**1/4"-28**	**1/4"-28**	**1/4"-28**	**3/8"-24**	**3/8"-24**	**3/8"-24**
Zapfen-Maß PILOT DIA.	**Artikel-Nr.** PART NO.	**Artikel-Nr.** PART NO.	**Artikel-Nr.** PART NO.	**Artikel-Nr.** PART NO.	**Artikel-Nr.** PART NO.	**Artikel-Nr.** PART NO.
2,38 / **3/32"**	**151-2CT-3/32"**	**152-2CT-3/32"**				
2,50 / **#40**	**151-2CT-40**	**152-2CT-40**				
3,18 / **1/8"**	**151-2CT-1/8"**	**152-2CT-1/8"**				
3,26 / **#30**	**151-2CT-30**	**152-2CT-30**				
3,97 / **5/32"**	**151-2CT-5/32"**	**152-2CT-5/32"**	**153-2CT-5/32"**			
4,04 / **#21**	**151-2CT-21**	**152-2CT-21**	**153-2CT-21**			
4,76 / **3/16"**	**151-2CT-3/16"**	**152-2CT-3/16"**	**153-2CT-3/16"**			
4,85 / **#11**		**152-2CT-11**	**153-2CT-11**			
4,91 / **#10**		**152-2CT-10**	**153-2CT-10**			
6,35 / **1/4"**		**152-2CT-1/4"**	**153-2CT-1/4"**	**155-2CT-1/4"**	**156-2CT-1/4"**	**157-2CT-1/4"**
7,94 / **5/16"**			**153-2CT-5/16"**	**155-2CT-5/16"**	**156-2CT-5/16"**	**157-2CT-5/16"**
9,53 / **3/8"**				**155-2CT-3/8"**	**156-2CT-3/8"**	**157-2CT-3/8"**
11,11/ **7/16"**					**156-2CT-7/16"**	**157-2CT-7/16"**
12,70/ **1/2"**						**157-2CT-1/2"**

Andere Abmessungen und Winkel auf Anfrage / OTHER DIMENSION AND ANGLES ON REQUEST

100° Hartmetall-bestückte-Senker
100° CARBIDE TIPPED STOP COUNTERSINK CUTTERS

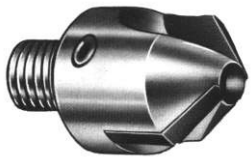

Für auswechselbare Führungszapfen
FOR REPLACEABLE PILOTS

SERIES 700

Artikel-Nr. PART NO.	**Körper-Maß** BODY-DIA.	**Bohrung** PILOT HOLE	**Gewinde** THREAD	**Schneiden** FLUTES
700-100°	**3/8"** (9,53 mm)	**5/64"** (1,98 mm)	**1/4"-28**	**2**
701-100°	**7/16"** (11,11mm)	**5/64"** (1,98 mm)	**1/4"-28**	**2**
702-100°	**1/2"** (12,70 mm)	**5/64"** (1,98 mm)	**1/4"-28**	**2**
703-100°	**1/2"** (12,70 mm)	**3/32"** (2,38 mm)	**1/4"-28**	**2**
704-100°	**1/2"** (12,70 mm)	**1/8"** (3,18 mm)	**1/4"-28**	**2**
705-100°	**5/8"** (15,88 mm)	**1/8"** (3,18 mm)	**1/4"-28**	**2**
706-100°	**5/8"** (15,88 mm)	**3/16"** (4,76 mm)	**1/4"-28**	**2**
707A-100°	**3/4"** (19,05 mm)	**3/16"** (4,76 mm)	**3/8"-24**	**3**
708A-100°	**7/8"** (22,23 mm)	**3/16"** (4,76 mm)	**3/8"-24**	**3**
709A-100°	**1"** (25,40 mm)	**3/16"** (4,76 mm)	**3/8"-24**	**3**
710A-100°	**1.1/8"** (28,58 mm)	**1/4"** (6,35 mm)	**3/8"-24**	**3**
711A-100°	**1.1/4"** (31,75 mm)	**1/4"** (6,35 mm)	**3/8"-24**	**3**
707B-100°	**3/4"** (19,05 mm)	**3/16"** (4,76 mm)	**7/16"-20**	**3**
708B-100°	**7/8"** (22,23 mm)	**3/16"** (4,76 mm)	**7/16"-20**	**3**
709B-100°	**1"** (25,40 mm)	**3/16"** (4,76 mm)	**7/16"-20**	**3**
710B-100°	**1.1/8"** (28,58 mm)	**1/4"** (6,35 mm)	**7/16"-20**	**3**
711B-100°	**1.1/4"** (31,75 mm)	**1/4"** (6,35 mm)	**7/16"-20**	**3**



Führungszapfen für Senker Serie 700...
REPLACEABLE PILOTS FOR CUTTER SERIES 700...
Standard Kombinationen/STANDARD COMBINATIONS

D = **S**	**5/64"** (1,98 mm)	**3/32"** (2,38 mm)	**1/8"** (3,18 mm)	**3/16"** (4,76 mm)	**1/4"** (6,35 mm)
1/8" (3,18 mm)	**755-1-5/64"**	**755-1-3/32"**			
#30 (3,26 mm)	**755-2-5/64"**	**755-2-3/32"**			
5/32" (3,97 mm)	**755-3-5/64"**	**755-3-3/32"**	**755-3-1/8"**		
#20 (4,09 mm)	**755-4-5/64"**	**755-4-3/32"**	**755-4-1/8"**		
3/16" (4,76 mm)	**755-5-5/64"**	**755-5-3/32"**	**755-5-1/8"**		
#10 (4,91 mm)	**755-6-5/64"**	**755-6-3/32"**	**755-6-1/8"**		
7/32" (5,56 mm)	**755-7-5/64"**	**755-7-3/32"**	**755-7-1/8"**	**755-7-3/16"**	
1/4" (6,35 mm)	**755-8-5/64"**	**755-8-3/32"**	**755-8-1/8"**	**755-8-3/16"**	
"F" (6,53 mm)		**755-9-3/32"**	**755-9-1/8"**	**755-9-3/16"**	
9/32" (7,14 mm)			**755-10-1/8"**	**755-10-3/16"**	
5/16" (7,94 mm)			**755-11-1/8"**	**755-11-3/16"**	**755-11-1/4"**
11/32" (8,73 mm)				**755-12-3/16"**	**755-12-1/4"**
3/8" (9,53 mm)				**755-13-3/16"**	**755-13-1/4"**
13/32" (10,32 mm)				**755-14-3/16"**	**755-14-1/4"**
7/16" (11,11 mm)				**755-15-3/16"**	**755-15-1/4"**
15/32" (11,91 mm)				**755-16-3/16"**	**755-16-1/4"**
1/2" (12,70 mm)				**755-17-3/16"**	**755-17-1/4"**
17/32" (13,49 mm)				**755-18-3/16"**	**755-18-1/4"**
9/16" (14,29 mm)				**755-19-3/16"**	**755-19-1/4"**
19/32" (15,08 mm)				**755-20-3/16"**	**755-20-1/4"**
5/8" (15,88 mm)				**755-21-3/16"**	**755-21-1/4"**

Andere Abmessungen und Winkel auf Anfrage / OTHER DIMENSION AND ANGLES ON REQUEST

100° Kevlar-Senker, mit sichelförmigen Schneiden

100° KEVLAR COUNTERSINK CUTTERS WITH "S" CUTTING FLUTES



Für auswechselbare Führungszapfen
FOR REPLACEABLE PILOTS

SERIES 455SK

Artikel-Nr. PART NO.	**Körper-Maß** BODY-DIA.	**Bohrung** PILOT HOLE	**Gewinde** THREAD	**Schneiden** FLUTES
455SKE-4-.086	**1/2"** (12,70 mm)	**.086** (2,18 mm)	**1/4"-28**	**2**
455SKG-4-.086	**5/8"** (15,88 mm)	**.086** (2,18 mm)	**1/4"-28**	**2**



Führungszapfen mit Schaft 2,18 mm, für Senker "455P/SK"
REPLACEABLE PILOTS WITH SHANK .086" FOR CUTTER "455P/SK"

Artikel-Nr. PART NO.	**484-56**	**484-2**	**484-57**	**484-12**	**484-59**	**484-21**	**484-61**	**484-31**	**484-32**	**484-63**	**484-65**
Zapfen=D PILOT =D	2,38 mm **3/32"**	2,50 mm **#40**	3,18 mm **1/8"**	3,26 mm **#30**	3,97 mm **5/32"**	4,04 mm **#21**	4,76 mm **3/16"**	4,85 mm **#11**	4,91 mm **#10**	5,56 mm **7/32"**	6,35 mm **1/4"**



Führungszapfen mit Schaft 3,18 mm, für Senker "455P.."
REPLACEABLE PILOTS WITH SHANK 1/8" FOR CUTTER "455P.."

Artikel-Nr. PART NO.	**755-3-1/8"**	**755-4-1/8"**	**755-5-1/8"**	**755-6-1/8"**	**755-7-1/8"**	**755-8-1/8"**	**755-9-1/8"**	**755-10-1/8"**	**755-11-1/8"**
Zapfen=D PILOT =D	3,97 mm **5/32"**	4,09 mm **#20**	4,76 mm **3/16"**	4,91 mm **#10**	5,56 mm **7/32"**	6,35 mm **1/4"**	6,53 mm **"F"**	7,14 mm **9/32"**	**5/16"** (7,94 mm)



Vollhartmetal-Bohrer mit Spezialanschliff
für KEVLAR und Kohlefaser Verbundwerkstoffe
SOLID CARBIDE DRILL WITH SPECIAL GRINDING
FOR KEVLAR AND GRAPHITE COMPOSITES

Artikel-Nr. / PART NO.	**342-3/32"**	**342-1/8"**	**342-5/32"**	**342-3/16"**	**342-1/4"**
Durchmesser / DIAMETER	**3/32"** (2,38 mm)	**1/8"** (3,18 mm)	**5/32"** (3,97 mm)	**3/16"** (4,76 mm)	**1/4"** (6,35 mm)
Gesamtlänge / O/A LENGTH	**1.690** (43 mm)	**1.930** (49 mm)	**2.160** (55 mm)	**2.440** (62 mm)	**3.1/4"** (82,55 mm)
Schneidenlänge / FLUTE LENGTH	**.551** (14 mm)	**.709** (18 mm)	**.866** (22 mm)	**1.024** (26 mm)	**2"** (50,80 mm)

100° Senker für Kohlefaser-Verbundwerkstoffe, mit Polycrystalin-Diamant bestückten Schneiden

100° COMPOSITE COUNTERSINK CUTTERS WITH POLYCRISTALINE INSERTS



Für auswechselbare Führungszapfen
FOR REPLACEABLE PILOTS

SERIES 455P

Artikel-Nr. PART NO.	**Körper-Maß** BODY-DIA.	**Bohrung** PILOT HOLE	**Gewinde** THREAD	**Schneiden** FLUTES
455PCE-4-.086	**1/2"** (12,70 mm)	**.086** (2,18 mm)	**1/4"-28**	**1**
455PDE-4-.086	**1/2"** (12,70 mm)	**.086** (2,18 mm)	**1/4"-28**	**2**
455PCG-4-.086	**5/8"** (15,88 mm)	**.086** (2,18 mm)	**1/4"-28**	**1**
455PDG-4-.086	**5/8"** (15,88 mm)	**.086** (2,18 mm)	**1/4"-28**	**2**
455PCH-4-1/8"	**3/4"** (19,05 mm)	**1/8"** (3,18 mm)	**3/8"-24**	**1**
455PDH-4-1/8"	**3/4"** (19,05 mm)	**1/8"** (3,18 mm)	**3/8"-24**	**2**

Andere Abmessungen und Winkel auf Anfrage / OTHER DIMENSION AND ANGLES ON REQUEST

PCD Tipped Countersinks with Pilot

100°/130° Angle Countersinks, Threaded Shank



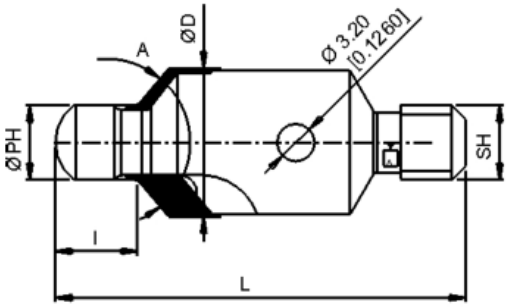

Part Number		D body dia	PD pilot dia	No. of Flutes	C' sink angle	Shank Thread
100°	130°					
445PCD-C-4-.125	445PCD-C-8-.125	3/8"	0.125	2	100°/130°	1/4"-28
445PCD-C-4-.128	445PCD-C-8-.128	3/8"	0.128	2	100°/130°	1/4"-28
445PCD-D-4-.156	445PCD-D-8-.156	7/16"	0.156	2	100°/130°	1/4"-28
445PCD-D-4-.187	445PCD-D-8-.187	7/16"	0.187	2	100°/130°	1/4"-28
445PCD-E-4-.125	445PCD-E-8-.125	1/2"	0.125	2	100°/130°	1/4"-28
445PCD-E-4-.128	445PCD-E-8-.128	1/2"	0.128	2	100°/130°	1/4"-28
445PCD-E-4-.239	445PCD-E-8-.239	1/2"	0.239	2	100°/130°	1/4"-28
445PCD-G-4-.191	445PCD-G-8-.191	5/8"	0.191	2	100°/130°	1/4"-28
445PCD-G-4-.250	445PCD-G-8-.250	5/8"	0.250	2	100°/130°	1/4"-28
445PCD-H-4-.312	445PCD-H-8-.312	3/4"	0.312	2	100°/130°	3/8"-24
445PCD-J-4-.312	445PCD-J-8-.312	7/8"	0.312	2	100°/130°	3/8"-24
445PCD-K-4-.312	445PCD-K-8-.312	1"	0.312	2	100°/130°	7/16"-20
445PCD-M-4-.312	445PCD-M-8-.312	1.1/4"	0.312	2	100°/130°	7/16"-20

PCD Drill Countersinks 100°

Part Number	Diameter Ø C.D.	Shank Ø d	Diameter C.D.2	Angel deg.
WCDR- _ _ _ _	from 0.1250 to 0.2500	3/8"	3/8"	100.0
WCDR- _ _ _ _	from 0.2540 to 0.3750	1/2"	1/2"	100.0
WCDR- _ _ _ _	from 0.3800 to 0.5000	1/2"	3/4"	100.0
FCDR- _ _ _ _	from 0.0980 to 0.2500	3/8"	3/8"	100.0
FCDR- _ _ _ _	from 0.2540 to 0.3125	1/2"	1/2"	100.0
FCDR- _ _ _ _	from 0.3130 to 0.3540	1/2"	3/4"	100.0

P/N Sample with a Ø C.D. of 0.2500 and Wafer/Spiral Tip: WCDR-2500

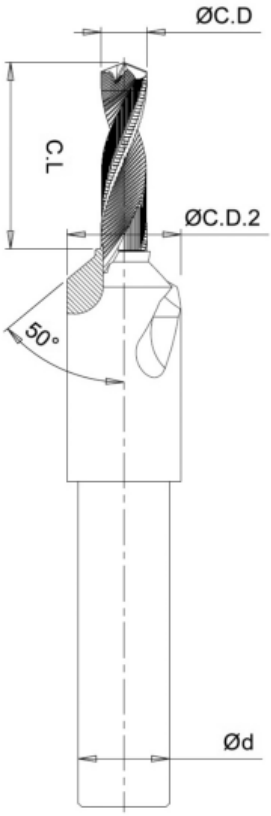

WCDR:
Wafer/Spiral Tip



FCDR:
Full Nib Tip



PCD Drill Countersinks are also available with Thread
Andere Abmessungen auf Anfrage / OTHER DIMENSIONS ON REQUEST

DAN 5109

100° Senker, Hartmetall bestückt

100° CARBIDE TIPPED COUNTERSINK CUTTER



3-Schneiden, mit festem Führungszapfen
3-FLUTES, WITH SOLID PILOT

Artikel-Nr.	Körper-Maß	Zapfen-Maß	Gewinde	Gesamtlänge	Zapfenlänge	Radius
PART NO.	BODY DIA.	PILOT DIA.	THREAD	OVERALL LENGTH	PILOT LENGTH	+/- 0,1 mm
DAN5109-10-4,06-M6x1	10 mm	4,06 mm	M 6 x 1	34 mm	6 mm	0,6 mm
DAN5109-10-4,71-M6x1	10 mm	4,71 mm	M 6 x 1	34 mm	6 mm	0,6 mm
DAN5109-10-4,77-M6x1	10 mm	4,77 mm	M 6 x 1	34 mm	6 mm	0,6 mm
DAN5109-14-5,08-M8x1	14 mm	5,08 mm	M 8 x 1	34 mm	6 mm	0,6 mm
DAN5109-14-5,45-M8x1	14 mm	5,45 mm	M 8 x 1	34 mm	6 mm	0,6 mm
DAN5109-14-5,48-M8x1	14 mm	5,48 mm	M 8 x 1	34 mm	6 mm	0,6 mm
DAN5109-14-5,50-M8x1	14 mm	5,50 mm	M 8 x 1	34 mm	6 mm	0,6 mm
DAN5109-14-5,88-M8x1	14 mm	5,88 mm	M 8 x 1	34 mm	6 mm	0,6 mm
DAN5109-14-6,24-M8x1	14 mm	6,24 mm	M 8 x 1	34 mm	6 mm	0,6 mm
DAN5109-14-6,27-M8x1	14 mm	6,27 mm	M 8 x 1	34 mm	6 mm	0,6 mm
DAN5109-14-6,30-M8x1	14 mm	6,30 mm	M 8 x 1	34 mm	6 mm	0,6 mm
DAN5109-14-6,67-M8x1	14 mm	6,67 mm	M 8 x 1	34 mm	6 mm	0,6 mm
DAN5109-14-7,07-M8x1	14 mm	7,07 mm	M 8 x 1	34 mm	6 mm	0,9 mm
DAN5109-14-7,83-M8x1	14 mm	7,83 mm	M 8 x 1	34 mm	6 mm	0,9 mm
DAN5109-14-7,91-M8x1	14 mm	7,91 mm	M 8 x 1	34 mm	6 mm	0,9 mm
DAN5109-14-8,26-M8x1	14 mm	8,26 mm	M 8 x 1	34 mm	6 mm	0,9 mm
DAN5109-14-8,65-M8x1	14 mm	8,65 mm	M 8 x 1	34 mm	6 mm	0,9 mm
DAN5109-14-9,49-M8x1	14 mm	9,49 mm	M 8 x 1	34 mm	6 mm	0,9 mm

HSCo - Schaftsenker - 100°

HSSCo - STRAIGHT SHANK COUNTERSINK CUTTERS - 100°

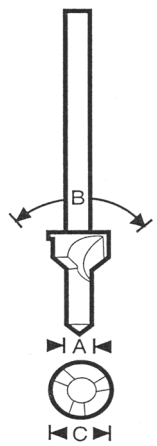

Artikel-Nr. PART NO.	Zapfenmaß PILOT DIA.	Körper-Maß BODY DIA.	Schneiden FLUTES	Schaftmaß SHANK DIA
	A	**C**		
350-.1875-100-.0938	2,38 mm **3/32"**	4,76 mm **3/16"**	**3**	4,76 mm **3/16"**
350-.2500-100-.1250	3,18 mm **1/8"**	6,35 mm **1/4"**	**3**	4,76 mm **3/16"**
350-.3125-100-.1562	3,97 mm **5/32"**	7,94 mm **5/16"**	**3**	4,76 mm **3/16"**
350-.3750-100-.1875	4,76 mm **3/16"**	9,53 mm **3/8"**	**3**	4,76 mm **3/16"**
350-.5000-100-.2500	6,35 mm **1/4"**	12,7 mm **1/2"**	**3**	4,76 mm **3/16"**

Andere Abmessungen und Winkel auf Anfrage / OTHER DIMENSIONS AND ANGLES ON REQUEST

100° Voll-Hartmetall-Schaft-Senker
100° SOLID CARBIDE STRAIGHT SHANK COUNTERSINKS

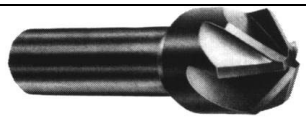

6- Schneiden, mit aufgelötetem VHM-Kopf
6-FLUTES WITH SOLID CARBIDE HEAD
BRAZED TO STEEL SHANK

Artikel-Nr. PART NO.	**910-3/8"-100°**	**910-1/2"-100°**	**910-5/8"-100°**	**910-3/4"-100°**
Körper-Maß BODY-DIA.	**3/8"** (9,53 mm)	**1/2"** (12,70 mm)	**5/8"** (15,88 mm)	**3/4"** (19,05 mm)
Schaftdurchmesser SHANK DIAMETER	**1/4"** (6,35 mm)	**1/4"** (6,35 mm)	**3/8"** (9,53 mm)	**3/8"** (9,53 mm)
Gesamtlänge ca. APPR. O/A LENGTH	**2.1/4"** (57,2 mm)	**2.1/2"** (63,5 mm)	**2.3/4"** (69,9 mm)	**2.3/4"** (69,9 mm)

100° HSS-Schaft-Senker
100° HSS - STRAIGHT SHANK COUNTERSINKS

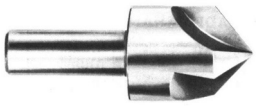

3-Schneiden
3-FLUTES

Artikel-Nr. PART NO.	**408A-4**	**408B-4**	**408C-4**	**408D-4**	**408E-4**
Körper-Maß BODY-DIA.	**1/4"** (6,35 mm)	**5/16"** (7,94 mm)	**3/8"** (9,53 mm)	**7/16"** (11,11 mm)	**1/2"** (12,70 mm)
Schaftdurchmesser SHANK DIAMETER	**3/16"** (4,76 mm)	**1/4"** (6,35 mm)	**1/4"** (6,35 mm)	**1/4"** (6,35 mm)	**1/4"** (6,35 mm)
Gesamtlänge ca. APPR. O/A LENGTH	**1.1/2"** (38,1 mm)	**1.1/2"** (38,1 mm)	**1.3/4"** (44,5 mm)	**1.3/4"** (44,5 mm)	**2"** (59,8 mm)

100° Mini-Anschlagsenker (Korbsenker)
100° MINIATURE-STOP-COUNTERSINK CUTTER

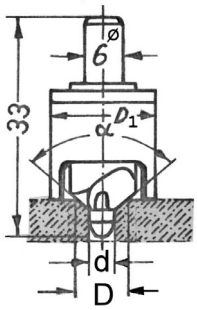

HSS-E, 2-Schneiden, Schaft 6 mm, Gesamtlänge 33 mm
inkl. 1 auswechselbarem Führungszapfen

HSS-E, 2-FLUTES, SHANK .236, OVER ALL LENGTH 1.19/64"
INCL. 1 REPLACEABLE PILOT

Norm: LN9199, DIN 65399, AN426, NASM20426

Artikel-Nr. PART NO.	**402-3/32"**	**402-1/8"**	**402-5/32"**	**402-3/16"**	**402-1/4"**
d	**3/32"** (2,38 mm)	**1/8"** (3,18 mm)	**5/32"** (3,97 mm)	**3/16"** (4,76 mm)	**1/4"** (6,35 mm)
D	**.1772** (4,50 mm)	**.2244** (5,70 mm)	**.2835** (7,20 mm)	**.3504** (8,90 mm)	**.4764** (12,1 mm)
D1	**.5118** (13,0 mm)	**.5118** (13,0 mm)	**.5512** (14,0 mm)	**.6229** (15,8 mm)	**.7480** (19,0 mm)

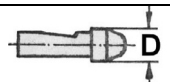

Führungszapfen für Senker Type 402
REPLACEABLE PILOT FOR CUTTER TYPE 402

Artikel-Nr. PART NO.	**411-3/32"**	**411-1/8"**	**411-5/32"**	**411-3/16"**	**411-1/4"**

Andere Abmessungen und Winkel auf Anfrage / OTHER DIMENSION AND ANGLES ON REQUEST

Rückzug-Senker Kit 100°
Back Countersink Cutter Kit 100°
HSS / HIGH SPEED STEEL, 4-Schneiden/Flutes

Artikel-Nr. / Part No.:

590TA



16 Teile/Pieces Kit

Kit includes 8, 100-degree countersinks and 8 pilots:

5/16" diameter with 1/8" pilot **(402C-4)**

3/8" diameter with 5/32" pilot **(402F-4)**

1/2" diameter with 3/16" pilot **(402I-4)**

3/4" diameter with 1/4" pilot **(402Q-4)**

7/8" diameter with 5/16" pilot **(402S-4)**

1" diameter with 3/8" pilot **(402V-4)**

1.1/4"diameter with 1/2" pilot **(402X-4)**

1/4" diameter with 3/32" pilot **(402B-4)**

Rückzug-Planfräser Kit
Back Spot Facer Cutter Kit
HSS / HIGH SPEED STEEL, 4-Schneiden/Flutes

Artikel-Nr. / Part No.:

590S



16 Teile/Pieces Kit

Kit includes 8, 100-degree countersinks and 8 pilots:

1/4" diameter with 3/32" pilot **(403-A)**

5/16" diameter with 1/8" pilot **(403-C)**

3/8" diameter with 5/32" pilot **(403-F)**

1/2" diameter with 3/16" pilot **(403-I)**

5/8" diameter with 1/4" pilot **(403-M)**

3/4" diameter with 5/16" pilot **(403-R)**

1" diameter with 3/8" pilot **(403-V)**

1 1/4" diameter with 1/2" pilot **(403-X)**

Rückzug-Senker 100°

BACK COUNTERSINK CUTTERS 100°

HSS / HIGH SPEED STEEL

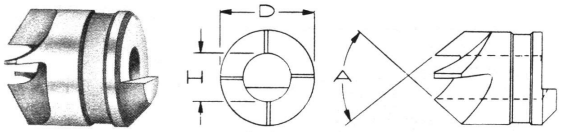

Artikel-Nr. PART NO.	D = Außenmaß D = BODY DIA	H = Innenmaß H = PILOT HOLE	Schneiden Flutes
402A-4	**1/4"** (6,35 mm)	**1/8"** (3,18 mm)	4
402B-4	**1/4"** (6,35 mm)	**3/32"** (2,38 mm)	4
180-2J	**5/16"** (7,94 mm)	**3/32"** (2,38 mm)	3
402C-4	**5/16"** (7,94 mm)	**1/8"** (3,18 mm)	4
402D-4	**5/16"** (7,94 mm)	**5/32"** (3,97 mm)	4
180-3J	**3/8"** (9,53 mm)	**1/8"** (3,18 mm)	3
402E-4	**3/8"** (9,53 mm)	**3/16"** (4,76 mm)	4
402F-4	**3/8"** (9,53 mm)	**5/32"** (3,97 mm)	4
180-4J	**7/16"** (11,11 mm)	**1/8"** (3,18 mm)	3
402G-4	**7/16"** (11,11 mm)	**3/16"** (4,76 mm)	4
402H-4	**7/16"** (11,11 mm)	**5/32"** (3,97 mm)	4
180-5J	**1/2"** (12,70 mm)	**5/32"** (3,97 mm)	3
402I-4	**1/2"** (12,70 mm)	**3/16"** (4,76 mm)	4
402J-4	**1/2"** (12,70 mm)	**1/4"** (6,35 mm)	4
180-6J	**9/16"** (14,29 mm)	**5/32"** (3,97 mm)	4
402K-4	**9/16"** (14,29 mm)	**3/16"** (4,76 mm)	4
402L-4	**9/16"** (14,29 mm)	**1/4"** (6,35 mm)	4
180-7J	**5/8"** (15,88 mm)	**3/16"** (4,76 mm)	4
402M-4	**5/8"** (15,88 mm)	**1/4"** (6,35 mm)	4
402N-4	**5/8"** (15,88 mm)	**5/16"** (7,94 mm)	4
180-8J	**11/16"** (17,46 mm)	**3/16"** (4,76 mm)	4
402O-4	**11/16"** (17,46 mm)	**1/4"** (6,35 mm)	4
402P-4	**11/16"** (17,46 mm)	**5/16"** (7,94 mm)	4
402Q-4	**3/4"** (19,05 mm)	**1/4"** (6,35 mm)	4
402R-4	**3/4"** (19,05 mm)	**5/16"** (7,94 mm)	4
180-9L	**3/4"** (19,05 mm)	**3/8"** (9,53 mm)	4
180-10J	**7/8"** (22,23 mm)	**1/4"** (6,35 mm)	4
402S-4	**7/8"** (22,23 mm)	**5/16"** (7,94 mm)	4
402T-4	**7/8"** (22,23 mm)	**3/8"** (9,53 mm)	4
402U-4	**1"** (25,40 mm)	**5/16"** (7,94 mm)	4
402V-4	**1"** (25,40 mm)	**3/8"** (9,53 mm)	4
180-11L	**1"** (25,40 mm)	**1/2"** (12,7 mm)	4
402W-4	**1.1/4"** (31,75 mm)	**3/8"** (9,53 mm)	4
402X-4	**1.1/4"** (31,75 mm)	**1/2"** (12,7 mm)	4

Rückzug-Senker 100°

BACK COUNTERSINK CUTTERS 100°

Vollhartmetall (HM-bestückt)**

SOLID CARBIDE(** CARBIDE TIPPED)

3-Schneiden / 3-FLUTES

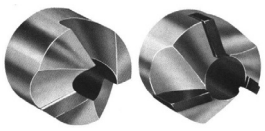

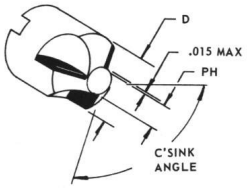

Artikel-Nr. PART NO.	D = Außenmaß D = BODY DIA	H = Innenmaß H = PILOT HOLE
181-1J	**1/4"** (6,35 mm)	**3/32"** (2,38 mm)
181-1K	**1/4"** (6,35 mm)	**1/8"** (3,18 mm)
181-2J	**5/16"** (7,94 mm)	**3/32"** (2,38 mm)
181-2 K	**5/16"** (7,94 mm)	**1/8"** (3,18 mm)
181-2 L	**5/16"** (7,94 mm)	**5/32"** (3,97 mm)
181-3J	**3/8"** (9,53 mm)	**1/8"** (3,18 mm)
181-3K	**3/8"** (9,53 mm)	**5/32"** (3,97 mm)
181-3L	**3/8"** (9,53 mm)	**3/16"** (4,76 mm)
181-4J	**7/16"** (11,11 mm)	**1/8"** (3,18 mm)
181-4K	**7/16"** (11,11 mm)	**5/32"** (3,97 mm)
181-4L	**7/16"** (11,11 mm)	**3/16"** (4,76 mm)
181-5J	**1/2"** (12,70 mm)	**5/32"** (3,97 mm)
181-5K	**1/2"** (12,70 mm)	**3/16"** (4,76 mm)
181-5L	**1/2"** (12,70 mm)	**1/4"** (6,35 mm)
181-6J	**9/16"** (14,29 mm)	**5/32"** (3,97 mm)
181-6K	**9/16"** (14,29 mm)	**3/16"** (4,76 mm)
181-6L	**9/16"** (14,29 mm)	**1/4"** (6,35 mm)
181-7J	**5/8"** (15,88 mm)	**3/16"** (4,76 mm)
181-7K	**5/8"** (15,88 mm)	**1/4"** (6,35 mm)
181-7L	**5/8"** (15,88 mm)	**5/16"** (7,94 mm)
181-8J	**11/16"** (17,46 mm)	**3/16"** (4,76 mm)
181-8K	**11/16"** (17,46 mm)	**1/4"** (6,35 mm)
181-8L	**11/16"** (17,46 mm)	**5/16"** (7,94 mm)
181-9J	**3/4"** (19,05 mm)	**1/4"** (6,35 mm)
181-9K	**3/4"** (19,05 mm)	**5/16"** (7,94 mm)
181-9L	**3/4"** (19,05 mm)	**3/8"** (9,53 mm)
181-10J	**7/8"** (22,23 mm)	**1/4"** (6,35 mm)
181-10K	**7/8"** (22,23 mm)	**5/16"** (7,94 mm)
181-10L	**7/8"** (22,23 mm)	**3/8"** (9,53 mm)
181-11J	**1"** (25,40 mm)	**5/16"** (7,94 mm)
181-11K **	**1"** (25,40 mm)	**3/8"** (9,53 mm)
181-11L **	**1"** (25,40 mm)	**1/2"** (12,7 mm)
181-12J **	**1.1/4"** (31,75 mm)	**3/8"** (9,53 mm)
181-12K **	**1.1/4"** (31,75 mm)	**1/2"** (12,7 mm)

Andere Abmessungen und Winkel auf Anfrage / OTHER DIMENSION AND ANGLES ON REQUEST

Rückzug-Planfräser
BACK SPOTFACER CUTTERS
HSS / HIGH SPEED STEEL
4-Schneiden / 4-FLUTES

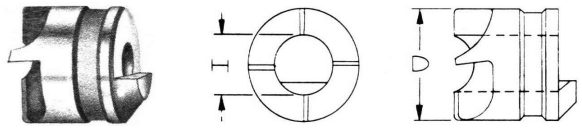

Artikel-Nr. PART NO.	D = Außenmaß D = BODY DIA	PH = Innenmaß PH = PILOT HOLE
403A	**1/4"** (6,35 mm)	**3/32"** (2,38 mm)
403B	**1/4"** (6,35 mm)	**1/8"** (3,18 mm)
190-2J	**5/16"** (7,94 mm)	**3/32"** (2,38 mm)
403C	**5/16"** (7,94 mm)	**1/8"** (3,18 mm)
403D	**5/16"** (7,94 mm)	**5/32"** (3,97 mm)
190-3J	**3/8"** (9,53 mm)	**1/8"** (3,18 mm)
403E	**3/8"** (9,53 mm)	**3/16"** (4,76 mm)
403F	**3/8"** (9,53 mm)	**5/32"** (3,97 mm)
190-4J	**7/16"** (11,11 mm)	**1/8"** (3,18 mm)
403G	**7/16"** (11,11 mm)	**3/16"** (4,76 mm)
403H	**7/16"** (11,11 mm)	**5/32"** (3,97 mm)
190-5J	**1/2"** (12,70 mm)	**5/32"** (3,97 mm)
403I	**1/2"** (12,70 mm)	**3/16"** (4,76 mm)
403J	**1/2"** (12,70 mm)	**1/4"** (6,35 mm)
190-6J	**9/16"** (14,29 mm)	**5/32"** (3,97 mm)
403K	**9/16"** (14,29 mm)	**3/16"** (4,76 mm)
403L	**9/16"** (14,29 mm)	**1/4"** (6,35 mm)
190-7J	**5/8"** (15,88 mm)	**3/16"** (4,76 mm)
403M	**5/8"** (15,88 mm)	**1/4"** (6,35 mm)
403N	**5/8"** (15,88 mm)	**5/16"** (7,94 mm)
190-8J	**11/16"** (17,46 mm)	**3/16"** (4,76 mm)
403O	**11/16"** (17,46 mm)	**1/4"** (6,35 mm)
403P	**11/16"** (17,46 mm)	**5/16"** (7,94 mm)
403Q	**3/4"** (19,05 mm)	**1/4"** (6,35 mm)
403R	**3/4"** (19,05 mm)	**5/16"** (7,94 mm)
190-9L	**3/4"** (19,05 mm)	**3/8"** (9,53 mm)
190-10J	**7/8"** (22,23 mm)	**1/4"** (6,35 mm)
403S	**7/8"** (22,23 mm)	**5/16"** (7,94 mm)
403T	**7/8"** (22,23 mm)	**3/8"** (9,53 mm)
403U	**1"** (25,40 mm)	**5/16"** (7,94 mm)
403V	**1"** (25,40 mm)	**3/8"** (9,53 mm)
190-11L	**1"** (25,40 mm)	**1/2"** (12,7 mm)
190-11M	**1.1/8"** (28,58 mm)	**3/8"** (9,53 mm)
190-11N	**1.1/8"** (28,58 mm)	**1/2"** (12,7 mm)
403W	**1.1/4"** (31,75 mm)	**3/8"** (9,53 mm)
403X	**1.1/4"** (31,75 mm)	**1/2"** (12,7 mm)

Rückzug-Planfräser
BACK SPOTFACER CUTTERS
Vollhartmetall (HM-bestückt)**
SOLID CARBIDE (** CARBIDE TIPPED)
4-Schneiden / 4-FLUTES

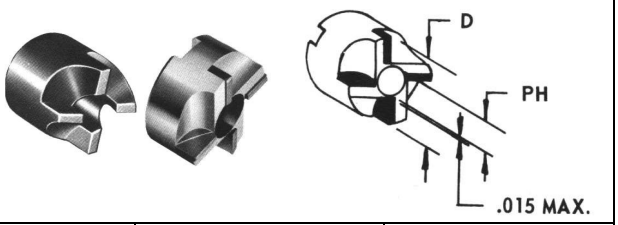

Artikel-Nr. PART NO.	D = Außenmaß D = BODY DIA	PH = Innenmaß PH = PILOT HOLE
191-1J	**1/4"** (6,35 mm)	**3/32"** (2,38 mm)
191-1K	**1/4"** (6,35 mm)	**1/8"** (3,18 mm)
191-2J	**5/16"** (7,94 mm)	**3/32"** (2,38 mm)
191-2 K	**5/16"** (7,94 mm)	**1/8"** (3,18 mm)
191-2 L	**5/16"** (7,94 mm)	**5/32"** (3,97 mm)
191-3J	**3/8"** (9,53 mm)	**1/8"** (3,18 mm)
191-3K	**3/8"** (9,53 mm)	**5/32"** (3,97 mm)
191-3L	**3/8"** (9,53 mm)	**3/16"** (4,76 mm)
191-4J	**7/16"** (11,11 mm)	**1/8"** (3,18 mm)
191-4K	**7/16"** (11,11 mm)	**5/32"** (3,97 mm)
191-4L	**7/16"** (11,11 mm)	**3/16"** (4,76 mm)
191-5J	**1/2"** (12,70 mm)	**5/32"** (3,97 mm)
191-5K	**1/2"** (12,70 mm)	**3/16"** (4,76 mm)
191-5L	**1/2"** (12,70 mm)	**1/4"** (6,35 mm)
191-6J	**9/16"** (14,29 mm)	**5/32"** (3,97 mm)
191-6K	**9/16"** (14,29 mm)	**3/16"** (4,76 mm)
191-6L	**9/16"** (14,29 mm)	**1/4"** (6,35 mm)
191-7J	**5/8"** (15,88 mm)	**3/16"** (4,76 mm)
191-7K	**5/8"** (15,88 mm)	**1/4"** (6,35 mm)
191-7L	**5/8"** (15,88 mm)	**5/16"** (7,94 mm)
191-8J	**11/16"** (17,46 mm)	**3/16"** (4,76 mm)
191-8K	**11/16"** (17,46 mm)	**1/4"** (6,35 mm)
191-8L	**11/16"** (17,46 mm)	**5/16"** (7,94 mm)
191-9J	**3/4"** (19,05 mm)	**1/4"** (6,35 mm)
191-9K	**3/4"** (19,05 mm)	**5/16"** (7,94 mm)
191-9L	**3/4"** (19,05 mm)	**3/8"** (9,53 mm)
191-10J	**7/8"** (22,23 mm)	**1/4"** (6,35 mm)
191-10K	**7/8"** (22,23 mm)	**5/16"** (7,94 mm)
191-10L	**7/8"** (22,23 mm)	**3/8"** (9,53 mm)
191-11J	**1"** (25,40 mm)	**5/16"** (7,94 mm)
191-11K	**1"** (25,40 mm)	**3/8"** (9,53 mm)
191-11L	**1"** (25,40 mm)	**1/2"** (12,7 mm)
191-11M **	**1.1/8"** (28,58 mm)	**3/8"** (9,53 mm)
191-11N **	**1.1/8"** (28,58 mm)	**1/2"** (12,7 mm)
191-12J **	**1.1/4"** (31,75 mm)	**3/8"** (9,53 mm)
191-12K **	**1.1/4"** (31,75 mm)	**1/2"** (12,7 mm)

Andere Abmessungen und Winkel auf Anfrage / OTHER DIMENSION AND ANGLES ON REQUEST

Führungsstangen für Rückzug-Senker und Rückzug-Planfräser
Serie 180 - 181 - 190 - 191 - 402 - 403

PILOTS FOR BACK COUNTERSINK CUTTERS & BACK SPOTFACER CUTTERS
SERIES 180 - 181 - 190 - 191 - 402 - 403

Standard Führungsstangen / PLAIN PILOTS

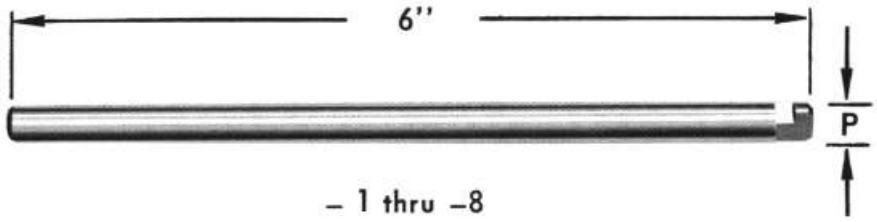

Artikel-Nr. PART NO.	P = Durchmesser P = PILOT DIA		Artikel-Nr. PART NO.	P = Durchmesser P = PILOT DIA		Artikel-Nr. PART NO.	P = Durchmesser P = PILOT DIA
185-1	**3/32"** (2,38 mm)		**185-4**	**3/16"** (4,76 mm)		**185-7**	**3/8"** (9,53 mm)
185-2	**1/8"** (3,18 mm)		**185-5**	**1/4"** (6,35 mm)		**185-8**	**1/2"** (12,7 mm)
185-3	**5/32"** (3,97 mm)		**185-6**	**5/16"** (7,94 mm)			

Abgesetzte Führungsstangen / STEP PILOTS

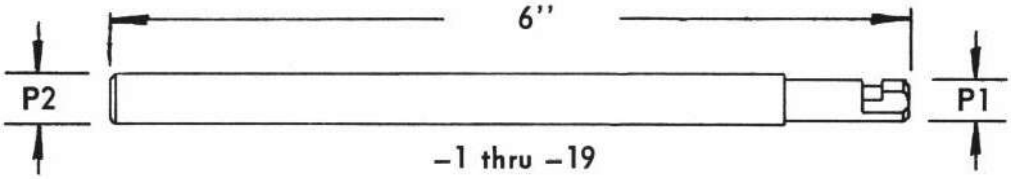

Artikel-Nr. PART NO.	P1	P2	Nur geeignet für Fräserdurchmesser : ONLY FOR USE WITH CUTTER DIAMETER :
186-1	**3/32"** (2,38 mm)	**1/8"** (3,18 mm)	**1/4" - 5/16"**
186-2	**1/8"** (3,18 mm)	**5/32"** (3,97 mm)	**1/4" - 5/16" - 3/8" - 7/16"**
186-3	**5/32"** (3,97 mm)	**3/16"** (4,76 mm)	**5/16" - 3/8" - 7/16" - 1/2"**
186-4	**3/16"** (4,76 mm)	**1/4"** (6,35 mm)	**3/8" - 7/16" - 1/2"**
186-5	**1/4"** (6,35 mm)	**5/16"** (7,94 mm)	**1/2"**
186-6	**5/32"** (3,97 mm)	**3/16"** (4,76 mm)	**9/16"**
186-7	**3/16"** (4,76 mm)	**1/4"** (6,35 mm)	**9/16" - 5/8" - 11/16"**
186-8	**1/4"** (6,35 mm)	**5/16"** (7,94 mm)	**9/16" - 5/8" - 11/16" - 3/4"**
186-9	**5/16"** (7,94 mm)	**3/8"** (9,53 mm)	**5/8" - 11/16" - 3/4" - 7/8"**
186-10	**3/8"** (9,53 mm)	**1/2"** (12,7 mm)	**3/4" - 7/8" - 1"**
186-11	**1/2"** (12,7 mm)	**9/16"** (14,29 mm)	**1"**
186-16	**3/8"** (9,53 mm)	**1/2"** (12,7 mm)	**1.1/8" - 1.1/4"**
186-17	**1/2"** (12,7 mm)	**9/16"** (14,29 mm)	**1.1/8" - 1.1/4"**

Andere Abmessungen auf Anfrage / OTHER DIMENSIONS ON REQUEST

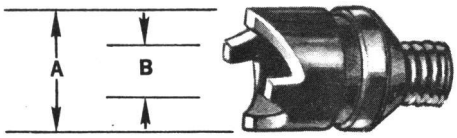

HSS-Hohlfräser
mit Gewinde-Schaft 1/4"-28
HSS-HOLLOW-CUTTERS
WITH THREADED SHANK 1/4"-28

Artikel-Nr. PART NO.	**A = Außendurchmesser** A = OUTSIDE DIAMETER	**B = Innendurchmesser** B = INSIDE DIAMETER	**Nietart & Nenngröße** FASTENER & SIZE
493C-0	**.365** (9,27 mm)	**.124** (3,15 mm)	**Hi-Shear Rivet 1/8"** (3,18 mm)
493C-00	**.365** (9,27 mm)	**.157** (3,99 mm)	**Hi-Shear Rivet 5/32"** (3,97 mm)
493C-1	**.438** (11,13 mm)	**.1875** (4,76 mm)	**Hi-Shear Rivet 3/16"** (4,76 mm)
493C-2	**.500** (12,70 mm)	**.247** (6,27 mm)	**Hi-Shear Rivet 1/4"** (6,35 mm)
493C-3	**.562** (14,27 mm)	**.310** (7,87 mm)	**Hi-Shear Rivet 5/16"** (7,94 mm)
493C-4	**.625** (15,88 mm)	**.373** (9,47 mm)	**Hi-Shear Rivet 3/8"** (9,53 mm)
493D-1	**.323** (8,20 mm)	**.1875** (4,76 mm)	**Huck Bolt L6**
493D-3	**.413** (10,49 mm)	**.250** (6,35 mm)	**Huck Bolt L8**



HSS-Lochsägen mit grober Verzahnung für Aluminium und Stahl
HSS-HOLE SAWS WITH COARSE TOOTH
FOR ALUMINUM AND STEEL

Gewinde / THREAD **5/16"-24**		**Gewinde /** THREAD **1/2"-20**		**Gewinde /** THREAD **1/2"-20**	
Artikel-Nr. PART NO.	**Durchmesser** DIAMETER	**Artikel-Nr.** PART NO.	**Durchmesser** DIAMETER	**Artikel-Nr.** PART NO.	**Durchmesser** DIAMETER
474-3	**1/2"** (12,70 mm)	**474-16**	**1.5/16"** (33,34 mm)	**474-29**	**2.1/8"** (53,98 mm)
474-4	**9/16"** (14,29 mm)	**474-17**	**1.3/8"** (34,93 mm)	**474-30**	**2.3/16"** (55,56 mm)
474-5	**5/8"** (15,88 mm)	**474-18**	**1.7/16"** (36,51 mm)	**474-31**	**2.1/4"** (57,15 mm)
474-6	**11/16"** (17,46 mm)	**474-19**	**1.1/2"** (38,10 mm)	**474-32**	**2.5/16"** (58,74 mm)
474-7	**3/4"** (19,05 mm)	**474-20**	**1.9/16"** (39,69 mm)	**474-33**	**2.3/8"** (60,33 mm)
474-8	**13/16"** (20,64 mm)	**474-21**	**1.5/8"** (41,28 mm)	**474-35**	**2.1/2"** (63,50 mm)
474-9	**7/8"** (22,23 mm)	**474-22**	**1.11/16"** (42,86 mm)	**474-38**	**2.11/16"** (68,26 mm)
474-10	**15/16"** (23,81 mm)	**474-23**	**1.3/4"** (44,45 mm)	**474-39**	**2.3/4"** (69,85 mm)
474-11	**1"** (25,40 mm)	**474-24**	**1.13/16"** (46,04 mm)	**474-40**	**2.13/16"** (71,44 mm)
474-12	**1.1/16"** (26,99 mm)	**474-25**	**1.7/8"** (47,63 mm)	**474-41**	**2.7/8"** (73,03 mm)
474-13	**1.1/8"** (28,58 mm)	**474-26**	**1.15/16"** (49,21 mm)	**474-43**	**3"** (76,20 mm)
474-14	**1.3/16"** (30,16 mm)	**474-27**	**2"** (50,80 mm)		
474-15	**1.1/4"** (31,75 mm)	**474-28**	**2.1/16"** (52,39 mm)		

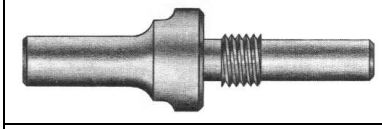

Halter mit Führung für Lochsägen Serie 474
HOLE SAW ARBOR FOR SERIE 474

Artikel-Nr. PART NO.	**Schaftart & Durchmesser** SHANK TYPE & SIZE	**Zapfendurchmesser** PILOT DIAMETER	**Gewindeabmessung THREAD SIZE**
415-0	**1/4" DIA.** (6,35 mm Rund)	**3/16"** (4,76 mm)	**5/16"-24**
415-1	**1/4" DIA.** (6,35 mm Rund)	**1/4"** (6,35 mm)	**5/16"-24**
415-2	**1/2" DIA.** (12,70 mm Rund)	**1/4"** (6,35 mm)	**1/2"-20**
415-3	**1/2" DIA.** (12,70 mm Rund)	**3/8"** (9,53 mm)	**1/2"-20**
415-10	**1/4" DIA.** (6,35 mm Rund)	**1/4"** (6,35 mm)	**1/2"-20**
415-11	**1/4" DIA.** (6,35 mm Rund)	**3/8"** (9,53 mm)	**1/2"-20**

HM-bestückte Lochsägen "GP Integral" Metrisch/Zoll

CARBIDE TIPPED HOLE SAWS "GP INTEGRAL" METRIC/INCH



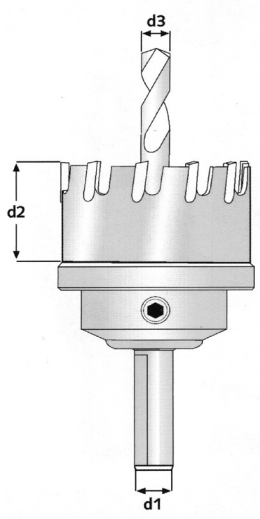

Art.Nr. P/N	D mm	d1 mm	d2 mm	d3 mm	Art.Nr. P/N	D mm	d1 mm	d2 mm	d3 mm
CT16	16	10	15	6	**CT51**	51	10	15	6
CT17	17	10	15	6	**CT52**	52	13	15	6
CT18	18	10	15	6	**CT53**	53	13	15	6
CT19	19	10	15	6	**CT54**	54	13	15	6
CT20	20	10	15	6	**CT55**	55	13	15	6
CT21	21	10	15	6	**CT56**	56	13	15	6
CT22	22	10	15	6	**CT57**	57	13	15	6
CT23	23	10	15	6	**CT58**	58	13	15	6
CT24	24	10	15	6	**CT59**	59	13	15	6
CT25	25	10	15	6	**CT60**	60	13	15	6
CT26	26	10	15	6	**CT61**	61	13	15	6
CT27	27	10	15	6	**CT62**	62	13	15	6
CT28	28	10	15	6	**CT63**	63	13	15	6
CT29	29	10	15	6	**CT64**	64	13	15	6
CT30	30	10	15	6	**CT65**	65	13	15	6
CT31	31	10	15	6	**CT66**	66	13	15	6
CT32	32	10	15	6	**CT67**	67	13	15	6
CT33	33	10	15	6	**CT68**	68	13	15	6
CT34	34	10	15	6	**CT69**	69	13	15	6
CT35	35	10	15	6	**CT70**	70	13	15	6
CT36	36	10	15	6	**CT71**	71	13	15	6
CT37	37	10	15	6	**CT72**	72	13	15	6
CT38	38	10	15	6	**CT73**	73	13	15	6
CT39	39	10	15	6	**CT74**	74	13	15	6
CT40	40	10	15	6	**CT75**	75	13	15	6
CT41	41	10	15	6	**CT76**	76	13	15	6
CT42	42	10	15	6	**CT77**	77	13	15	6
CT43	43	10	15	6	**CT78**	78	13	15	6
CT44	44	10	15	6	**CT79**	79	13	15	6
CT45	45	10	15	6	**CT80**	80	13	15	6
CT46	46	10	15	6	**CT85**	85	13	15	6
CT47	47	10	15	6	**CT90**	90	13	15	6
CT48	48	10	15	6	**CT95**	95	13	15	6
CT49	49	10	15	6	**CT100**	100	13	15	6
CT50	50	10	15	6					

Ersatzbohrer für GP Integral Lochsägen
REPLACEMENT DRILL FOR GP INTEGRAL HOLE SAWS



Art.Nr. P/N	Durchmesser DIA	Länge LENGTH
PCT6	6,35 mm	60 mm

Andere Abmessungen auf Anfrage / OTHER DIMENSIONS ON REQUEST

Plansenker mit geradem Schaft für auswechselbare Führungszapfen

COUNTERBORES WITH STRAIGHT SHANK AND HOLE FOR REPLACEABLE PILOTS

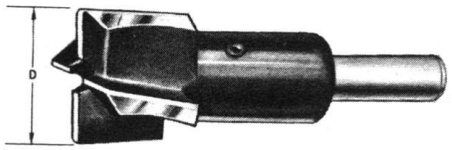

488C

HSS-Schnellarbeitsstahl
HSS-HIGH SPEED STEEL
Führungszapfen Serie 489...
PILOTS SERIE 489...

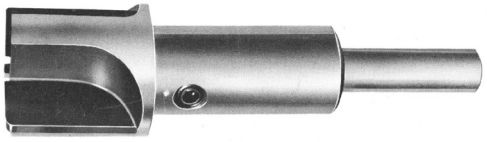

850

Hartmetall bestück
CARBIDE TIPPED
Führungszapfen Serie 855...
PILOTS SERIE 855...

Artikel-Nr. PART NO.	**Artikel-Nr.** PART NO.	**D = Durchmesser** D = BODY-DIA.	**Bohrung für Zapfen** PILOT HOLE DIA.	**Schaftabmessung** SHANK DIAMETER	**Gesamtlänge** OVER ALL LENGTH
488C-0	**-------**	**3/16"** (4,76 mm)	**3/32"** (2,38 mm)	**1/4"** (6,35 mm)	**2.3/8"** (60,3 mm)
488C-1	**850-1**	**1/4"** (6,35 mm)	**3/32"** (2,38 mm)	**1/4"** (6,35 mm)	**2.3/8"** (60,3 mm)
488C-2	**850-2**	**9/32"** (7,14 mm)	**3/32"** (2,38 mm)	**1/4"** (6,35 mm)	**2.3/8"** (60,3 mm)
488C-3	**850-3**	**5/16"** (7,94 mm)	**3/32"** (2,38 mm)	**1/4"** (6,35 mm)	**2.3/8"** (60,3 mm)
488C-4	**850-4**	**11/32"** (8,73 mm)	**3/32"** (2,38 mm)	**1/4"** (6,35 mm)	**2.3/8"** (60,3 mm)
488C-5	**850-5**	**3/8"** (9,53 mm)	**3/32"** (2,38 mm)	**1/4"** (6,35 mm)	**2.3/8"** (60,3 mm)
488C-6	**850-6**	**13/32"** (10,32 mm)	**1/8"** (3,18 mm)	**1/4"** (6,35 mm)	**2.3/4"** (69,9 mm)
488C-7	**850-7**	**7/16"** (11,11 mm)	**1/8"** (3,18 mm)	**1/4"** (6,35 mm)	**2.3/4"** (69,9 mm)
488C-8	**850-8**	**15/32"** (11,91 mm)	**1/8"** (3,18 mm)	**1/4"** (6,35 mm)	**2.3/4"** (69,9 mm)
488C-9	**850-9**	**1/2"** (12,70 mm)	**1/8"** (3,18 mm)	**1/4"** (6,35 mm)	**2.3/4"** (69,9 mm)
488C-10	**850-10**	**17/32"** (13,49 mm)	**1/8"** (3,18 mm)	**1/4"** (6,35 mm)	**2.3/4"** (69,9 mm)
488C-11	**850-11**	**9/16"** (14,29 mm)	**1/8"** (3,18 mm)	**1/4"** (6,35 mm)	**2.3/4"** (69,9 mm)
488C-12	**850-12**	**19/32"** (15,08 mm)	**1/8"** (3,18 mm)	**1/4"** (6,35 mm)	**2.3/4"** (69,9 mm)
488C-13	**850-13**	**5/8"** (15,88 mm)	**1/8"** (3,18 mm)	**1/4"** (6,35 mm)	**2.3/4"** (69,9 mm)
488C-14	**850-14**	**21/32"** (16,67 mm)	**3/16"** (4,76 mm)	**1/4"** (6,35 mm)	**2.3/4"** (69,9 mm)
488C-15	**850-15**	**11/16"** (17,46 mm)	**3/16"** (4,76 mm)	**1/4"** (6,35 mm)	**2.3/4"** (69,9 mm)
488C-16	**850-16**	**23/32"** (18,26 mm)	**3/16"** (4,76 mm)	**1/4"** (6,35 mm)	**2.3/4"** (69,9 mm)
488C-17	**850-17**	**3/4"** (19,05 mm)	**3/16"** (4,76 mm)	**1/4"** (6,35 mm)	**2.3/4"** (69,9 mm)
488C-18	**850-18**	**25/32"** (19,84 mm)	**3/16"** (4,76 mm)	**1/4"** (6,35 mm)	**2.3/4"** (69,9 mm)
488C-19	**850-19**	**13/16"** (20,64 mm)	**3/16"** (4,76 mm)	**1/4"** (6,35 mm)	**2.3/4"** (69,9 mm)
488C-20	**850-20**	**27/32"** (21,43 mm)	**3/16"** (4,76 mm)	**1/4"** (6,35 mm)	**2.3/4"** (69,9 mm)
488C-21	**850-21**	**7/8"** (22,23 mm)	**3/16"** (4,76 mm)	**1/4"** (6,35 mm)	**2.3/4"** (69,9 mm)
488C-22	**850-22**	**29/32"** (23,02 mm)	**3/16"** (4,76 mm)	**1/4"** (6,35 mm)	**2.3/4"** (69,9 mm)
488C-23	**850-23**	**15/16"** (23,81 mm)	**3/16"** (4,76 mm)	**1/4"** (6,35 mm)	**2.3/4"** (69,9 mm)
488C-24	**850-24**	**31/32"** (24,61 mm)	**3/16"** (4,76 mm)	**1/4"** (6,35 mm)	**2.3/4"** (69,9 mm)
488C-25	**850-25**	**1"** (25,40 mm)	**3/16"** (4,76 mm)	**1/4"** (6,35 mm)	**2.3/4"** (69,9 mm)
488C-26	**850-26**	**1.1/16"** (26,99 mm)	**3/16"** (4,76 mm)	**3/8"** (9,35 mm)	**2.3/4"** (69,9 mm)
488C-27	**850-27**	**1.1/8"** (28,58 mm)	**3/16"** (4,76 mm)	**3/8"** (9,35 mm)	**2.3/4"** (69,9 mm)
488C-28	**850-28**	**1.3/16"** (30,16 mm)	**3/16"** (4,76 mm)	**3/8"** (9,35 mm)	**2.3/4"** (69,9 mm)
488C-29	**850-29**	**1.1/4"** (31,75 mm)	**488C / 3/16"** (4,76 mm) **850 / 1/4"** (6,35 mm)	**3/8"** (9,35 mm)	**2.3/4"** (69,9 mm)
488C-30	**850-30**	**1.5/16"** (33,34 mm)	**488C / 3/16"** (4,76 mm) **850 / 1/4"** (6,35 mm)	**3/8"** (9,35 mm)	**2.3/4"** (69,9 mm)
488C-31	**850-31**	**1.3/8"** (34,93 mm)	**488C / 3/16"** (4,76 mm) **850 / 1/4"** (6,35 mm)	**3/8"** (9,35 mm)	**2.3/4"** (69,9 mm)
488C-32	**850-32**	**1.1/2"** (38,10 mm)	**488C / 3/16"** (4,76 mm) **850 / 1/4"** (6,35 mm)	**3/8"** (9,35 mm)	**2.3/4"** (69,9 mm)

Andere Abmessungen auf Anfrage / OTHER DIMENSIONS ON REQUEST

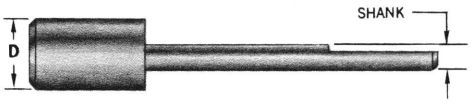

Führungszapfen für Senker Serie 488C

REPLACEABLE PILOTS FOR CUTTER SERIES 488C

Nenngröße / SIZE	**D**	**Schaft** / SHANK **3/32"** (2,38 mm)	**Schaft** / SHANK **1/8"** (3,18 mm)	**Schaft** / SHANK **3/16"** (4,76 mm)
3/32" (2,38 mm)	**.093** (2,36 mm)	**489A-1**		
1/8" (3,18 mm)	**.124** (3,15 mm)	**489A-2**	**489B-2**	
5/32" (3,97 mm)	**.154** (3,91 mm)	**489A-3**	**489B-3**	
#20 (4,09 mm)	**.159** (4,04 mm)	**489A-4**	**489B-4**	
3/16" (4,76 mm)	**.186** (4,72 mm)	**489A-5**	**489B-5**	**489C-5**
#10 (4,91 mm)	**.1915** (4,86 mm)	**489A-6**	**489B-6**	**489C-6**
7/32" (5,56 mm)	**.2167** (5,50 mm)	**489A-7**	**489B-7**	**489C-7**
1/4" (6,35 mm)	**.248** (6,30 mm)	**489A-8**	**489B-8**	**489C-8**
"F" (6,53 mm)	**.255** (6,48 mm)	**489A-9**	**489B-9**	**489C-9**
9/32" (7,14 mm)	**.279** (7,09 mm)	**489A-10**	**489B-10**	**489C-10**
5/16" (7,94 mm)	**.3105** (7,89 mm)	**489A-11**	**489B-11**	**489C-11**
11/32" (8,73 mm)	**.3415** (8,67 mm)		**489B-12**	**489C-12**
3/8" (9,53 mm)	**.373** (9,47 mm)		**489B-13**	**489C-13**
13/32" (10,32 mm)	**.404** (10,26 mm)		**489B-14**	**489C-14**
7/16" (11,11 mm)	**.4355** (11,06 mm)		**489B-15**	**489C-15**
15/32" (11,91 mm)	**.4665** (11,85 mm)		**489B-16**	**489C-16**
1/2" (12,70 mm)	**.498** (12,65 mm)		**489B-17**	**489C-17**
17/32" (13,49 mm)	**.529** (13,44 mm)			**489C-18**
9/16" (14,29 mm)	**.560** (14,22 mm)			**489C-19**
19/32" (15,08 mm)	**.591** (15,01 mm)			**489C-20**
5/8" (15,88 mm)	**.622** (15,80 mm)			**489C-21**
21/32" (16,67 mm)	**.653** (16,59 mm)			**489C-22**
11/16" (17,46 mm)	**.685** (17,40 mm)			**489C-23**
23/32" (18,26 mm)	**.716** (18,19 mm)			**489C-24**
3/4" (19,05 mm)	**.747** (18,97 mm)			**489C-25**

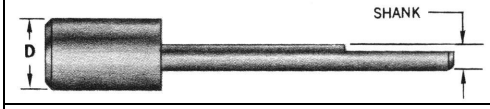

Führungszapfen für Senker Serie 850

REPLACEABLE PILOTS FOR CUTTER SERIES 850

Nenngröße / SIZE	**D**	**Schaft** / SHANK **3/32"** (2,38 mm)	**Schaft** / SHANK **1/8"** (3,18 mm)	**Schaft** / SHANK **3/16"** (4,76 mm)
3/32" (2,38 mm)	**.093** (2,36 mm)	**855-1-3/32"**		
1/8" (3,18 mm)	**.124** (3,15 mm)	**855-2-3/32"**	**855-2-1/8"**	
5/32" (3,97 mm)	**.154** (3,91 mm)	**855-3-3/32"**	**855-3-1/8"**	
#20 (4,09 mm)	**.159** (4,04 mm)	**855-4-3/32"**	**855-4-1/8"**	
3/16" (4,76 mm)	**.186** (4,72 mm)	**855-5-3/32"**	**855-5-1/8"**	**855-5-3/16"**
#10 (4,91 mm)	**.1915** (4,86 mm)	**855-6-3/32"**	**855-6-1/8"**	**855-6-3/16"**
7/32" (5,56 mm)	**.2167** (5,50 mm)	**855-7-3/32"**	**855-7-1/8"**	**855-7-3/16"**
1/4" (6,35 mm)	**.248** (6,30 mm)	**855-8-3/32"**	**855-8-1/8"**	**855-8-3/16"**
"F" (6,53 mm)	**.255** (6,48 mm)	**855-9-3/32"**	**855-9-1/8"**	**855-9-3/16"**
9/32" (7,14 mm)	**.279** (7,09 mm)		**855-10-1/8"**	**855-10-3/16"**
5/16" (7,94 mm)	**.3105** (7,89 mm)		**855-11-1/8"**	**855-11-3/16"**
11/32" (8,73 mm)	**.3415** (8,67 mm)			**855-12-3/16"**
3/8" (9,53 mm)	**.373** (9,47 mm)			**855-13-3/16"**
13/32" (10,32 mm)	**.404** (10,26 mm)			**855-14-3/16"**
7/16" (11,11 mm)	**.4355** (11,06 mm)			**855-15-3/16"**
15/32" (11,91 mm)	**.4665** (11,85 mm)			**855-16-3/16"**
1/2" (12,70 mm)	**.498** (12,65 mm)			**855-17-3/16"**
17/32" (13,49 mm)	**.529** (13,44 mm)			**855-18-3/16"**
9/16" (14,29 mm)	**.560** (14,22 mm)			**855-19-3/16"**
19/32" (15,08 mm)	**.591** (15,01 mm)			**855-20-3/16"**
5/8" (15,88 mm)	**.622** (15,80 mm)			**855-21-3/16"**

Andere Abmessungen auf Anfrage / OTHER DIMENSIONS ON REQUEST !

Hartmetall-bestückte Plansenker für Anschlaghalter
CARBIDE TIPPED STOP COUNTERBORES



Für auswechselbare Führungszapfen
FOR REPLACEABLE PILOTS

SERIES 730

Radius 0,40 mm
Max. nicht senkbarer Bereich ist 0,79 mm größer als die Pilot-Bohrung ! Zapfen bitte 0,79 mm größer als das Maß der Pilot-Bohrung bestellen !
RADIUS 1/64"
MAX. NONCUTTING DIAMETER IS 1/32" LARGER THAN PILOT HOLE ! USE PILOTS WITH HEAD DIAMETER 1/32" LARGER THAN PILOT HOLE !

Artikel-Nr. PART NO.	**Körper-Maß** BODY-DIA.	**Bohrung** PILOT HOLE	**Gewinde** THREAD
730-1	**3/8"** (9,53 mm)	**3/32"** (2,38 mm)	**1/4"-28**
730-2	**7/16"** (11,11 mm)	**1/8"** (3,18 mm)	**1/4"-28**
730-3	**1/2"** (12,70 mm)	**1/8"** (3,18 mm)	**1/4"-28**
730-4	**9/16"** (14,29 mm)	**1/8"** (3,18 mm)	**1/4"-28**
730-5	**5/8"** (15,88 mm)	**1/8"** (3,18 mm)	**1/4"-28**
730-6A	**11/16"** (17,46 mm)	**3/16"** (4,76 mm)	**3/8"-24**
730-6B	**11/16"** (17,46 mm)	**3/16"** (4,76 mm)	**7/16"-20**
730-7A	**3/4"** (19,05 mm)	**3/16"** (4,76 mm)	**3/8"-24**
730-7B	**3/4"** (19,05 mm)	**3/16"** (4,76 mm)	**7/16"-20**
730-8A	**13/16"** (20,64 mm)	**3/16"** (4,76 mm)	**3/8"-24**
730-8B	**13/16"** (20,64 mm)	**3/16"** (4,76 mm)	**7/16"-20**
730-9A	**7/8"** (22,23 mm)	**3/16"** (4,76 mm)	**3/8"-24**
730-9B	**7/8"** (22,23 mm)	**3/16"** (4,76 mm)	**7/16"-20**
730-10A	**15/16"** (23,81 mm)	**3/16"** (4,76 mm)	**3/8"-24**
730-10B	**15/16"** (23,81 mm)	**3/16"** (4,76 mm)	**7/16"-20**
730-11A	**1"** (25,40 mm)	**3/16"** (4,76 mm)	**3/8"-24**
730-11B	**1"** (25,40 mm)	**3/16"** (4,76 mm)	**7/16"-20**
730-12A	**1.1/8"** (28,58 mm)	**3/16"** (4,76 mm)	**3/8"-24**
730-12B	**1.1/8"** (28,58 mm)	**3/16"** (4,76 mm)	**7/16"-20**
730-13A	**1.1/4"** (31,75 mm)	**3/16"** (4,76 mm)	**3/8"-24**
730-13B	**1.1/4"** (31,75 mm)	**3/16"** (4,76 mm)	**7/16"-20**

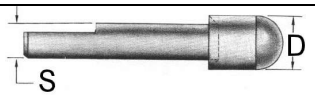

Führungszapfen für Plansenker Serie 730...
PILOTS FOR COUNTERSINK CUTTER SERIES 730...
Standard Kombinationen / STANDARD COMBINATIONS

D = **S**	**3/32"** (2,38 mm)	**1/8"** (3,18 mm)	**3/16"** (4,76 mm)
1/8" (3,18 mm)	**755-1-3/32"**		
#30 (3,26 mm)	**755-2-3/32"**		
5/32" (3,97 mm)	**755-3-3/32"**	**755-3-1/8"**	
#20 (4,09 mm)	**755-4-3/32"**	**755-4-1/8"**	
3/16" (4,76 mm)	**755-5-3/32"**	**755-5-1/8"**	
#10 (4,91 mm)	**755-6-3/32"**	**755-6-1/8"**	
7/32" (5,56 mm)	**755-7-3/32"**	**755-7-1/8"**	**755-7-3/16"**
1/4" (6,35 mm)	**755-8-3/32"**	**755-8-1/8"**	**755-8-3/16"**
"F" (6,53 mm)	**755-9-3/32"**	**755-9-1/8"**	**755-9-3/16"**
9/32" (7,14 mm)		**755-10-1/8"**	**755-10-3/16"**
5/16" (7,94 mm)		**755-11-1/8"**	**755-11-3/16"**
11/32" (8,73 mm)			**755-12-3/16"**
3/8" (9,53 mm)			**755-13-3/16"**
13/32" (10,32 mm)			**755-14-3/16"**
7/16" (11,11 mm)			**755-15-3/16"**
15/32" (11,91 mm)			**755-16-3/16"**
1/2" (12,70 mm)			**755-17-3/16"**
17/32" (13,49 mm)			**755-18-3/16"**
9/16" (14,29 mm)			**755-19-3/16"**
19/32" (15,08 mm)			**755-20-3/16"**
5/8" (15,88 mm)			**755-21-3/16"**

Andere Abmessungen auf Anfrage / OTHER DIMENSION ON REQUEST

30-000

Replaceable Ring Type Honeycomb Cutter



These tools are for contouring, carving and chamfering cuts of .25" or less. The unique patented holding system prevents the solid carbide blades from coming out of the holder if it is fractured.

The HSS saw blades and the diamond plated blades dish on the bottom so they clear the cut core finish like the hollow ground solid carbide style rings. The solid carbide rings may be reground several times at the factory making them very economical to use.

The HSS saw and diamond plated blades are disposable, offering the convenience of a constant diameter.

Usage For contouring, carving and chamfering cuts

SHANK ASSEMBLY			CUTTING BLADE OPTIONS				SPARE PARTS	
Part #	Blade Diameter	Shank DIA	Solid Carbide	Solid Carbide with Teeth	Diamond Plated	HSS Saw	Adapter Ring	Screw
30-011	1” (25.4mm)	1/2	30-012	30-313	30-112	30-213	-	30-011-2
30-021	2” (50.8mm)	1/2	30-022	30-322	30-122	30-222	30-020-3	30-020-4
30-031	3” (76.2mm)	1/2	30-032	30-332	30-132	30-232	30-030-3	30-030-4
30-041	4” (101.6mm)	1/2	30-042	30-342	30-142	30-242	30-040-3	30-040-4

31-000

High Speed Steel Cutter



Designed primarily for use on aluminum core, offering the versatility of smaller sizes for use on hand-held machines in field or maintenance type repairs. This cutter offers the strength of an integral shank and blade that has an edge sharpness unattainable with any other material. This sharpness and the relieved bottom yield part surfaces that require a minimum of preparation before bonding operation.

Usage Aluminum Core

Part Number	Cutting DIA	SHK DIA	OAL
31-010	1/2	1/4	2-1/16
31-015	3/4	1/4	2-3/32
31-020	1	1/4	2-1/8
31-025	1-1/2	1/2	2-1/4
31-030	2	1/2	2-3/4
31-040	3	1/2	2-15/16

Core Type	Rating
Aluminum, Lo Density (Less than 5#/cuft)	1
Aluminum, Hi Density (More than 5#/cuft)	2
Paper	2
Paper, Reinforced	N
Fiberglass	N
Phenolic	N
Polycarbonate	N
Aramid	N

1 - Excellent, 2 - Good, N - Not Recommended

32-000

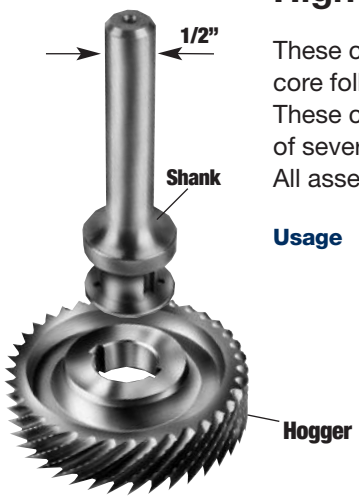

High Speed Steel Hogger

These cutters are specifically designed for fast (low force) removal of excess core followed by a final finish pass to obtain excellent finishes with one tool. These cutters enable cuts of up to .60” depths in a single pass. The availability of several different blades makes this cutter suitable for most core types. All assemblies require a shank, hogger and blade.

Usage Fast removal of excess core



HONEYCOMB HOGGER			SHANK		CUTTING BLADE OPTIONS					SPARE PARTS	
Part #	Cutting Diameter	Hogger Depth	Part #	Shank DIA	Blade Diameter	Solid Carbide	Diamond Plated	HSS Wavy Ring	HSS Saw	Adapter Ring	Screw
32-022	1.732 (44mm)	.629 (16mm)	32-021	1/2	1.771 (45mm)	32-026	-	32-023	-	-	-
					1.968 (50mm)	-	32-029*	-	32-027*	32-028	-
32-032	2.421 (61.5mm)	.629 (16mm)	32-031	1/2	2.480 (63mm)	32-036	-	32-033	-	-	-
					2.952 (75mm)	-	32-039*	-	32-037*	32-038	-

30-700



Reduced Weight Honeycomb Cutter

35% weight reduction has been designed into the larger diameter tools resulting in better performance on 3 or 5 axis machines. Part lifting and flagging have also been reduced due to the new tooth and flute design. Existing honeycomb blades will mount on these hoggers.

Usage CNC Machining of Honeycomb Core

HONEYCOMB HOGGER					CUTTING BLADE OPTIONS							SPARE PARTS	
Part #	Cutting Diameter	Hogger Depth	Shank DIA	OAL	Blade Diameter	HSS	HSS w/Teeth	Solid Carbide	Solid Carbide w/Teeth	Diamond Plated	HSS Saw	Adapter Ring	Screw
30-703	.345 (8.76mm)	1	1/2	3	3/8 (9.52mm)	30-016	30-316	-	-	-	-	-	HRD51646
30-705	.470 (11.93mm)	1	1/2	3	1/2 (12.7mm)	30-017	30-317	-	-	-	-	-	HRD51646
30-707	.720 (18.28mm)	1	1/2	3	3/4 (19.05mm)	-	-	30-015	30-318	-	-	-	30-011-2
30-710	.970 (24.63mm)	1	1/2	3	1 (25.4mm)	-	-	30-012	30-313	30-113	30-213	-	30-011-2
30-715	1.470 (37.33mm)	1	1/2	3	1 1/2 (38.10mm)	-	-	30-014	30-314	30-114	30-214	30-020-3	30-020-4
30-720	1.742 (44.24mm)	1	1/2	3	1.772 (45mm)	-	-	30-026	30-326	30-126[1]	30-226[1]	30-020-3	30-020-4
30-725	1.970 (50.03mm)	1	5/8	3	2 (50.8mm)	-	-	30-022	30-322	30-122	30-222	30-020-3	30-020-4
30-730	2.450 (62.23mm)	1	5/8	3	2.480 (63mm)	-	-	30-036	30-336	30-136	30-236	30-030-3	30-030-4
30-735	2.970 (75.43mm)	1	3/4	3	3 (76.20mm)	-	-	30-032	30-332	30-132	30-232	30-030-3	30-030-4
30-740	3.970 (100.83mm)	1	3/4	3	4 (101.6mm)	-	-	30-042	30-342	30-142	30-242	30-040-3	30-040-4

1 = 50mm diameter honecomb blade

COMPOSITE CUTTING TOOLS

P.B.S. Diamond Plated Saw Blades

Arbor Mounted 40/60 Grit – 1/8” Return

Part Number Slotted	Part Number Unslotted	Outside Diameter	Plated Thickness (Kerf)
49-SB1S	49-SB1U	1” (25 mm)	.060” to .080”
49-SB1-1/2S	49-SB1-1/2U	1-1/2” (38 mm)	
49-SB2S	49-SB2U	2” (51 mm)	
49-SB2-1/2S	49-SB2-1/2U	2-1/2” (64 mm)	
49-SB3S	49-SB3U	3” (76 mm)	
49-SB3-1/2S	49-SB3-1/2U	3-1/2” (89 mm)	
49-SB4S	49-SB4U	4” (102 mm)	
49-SB5S	49-SB5U	5” (127 mm)	.090” to .110”
49-SB6S	49-SB6U	6” (152 mm)	
49-SB7S	49-SB7U	7” (178 mm)	
49-SB8S	49-SB8U	8” (203 mm)	
49-SB10S	49-SB10U	10” (25.4 cm)	
49-SB12S	49-SB12U	12” (30.5 cm)	.120” to .130”
49-SB14S	49-SB14U	14” (35.6 cm)	
49-SB16S	49-SB16U	16” (40.6 cm)	
49-SB18S	49-SB18U	18” (45.7 cm)	
49-SB20S	49-SB20U	20” (50.8 cm)	.140” to .150”
49-SB22S	49-SB22U	22” (55.9 cm)	
49-SB24S	49-SB24U	24” (61.0 cm)	
49-SB36S	49-SB36U	36” (91.4 cm)	-
49-SB48S	49-SB48U	48” (122.0 cm)	-



***Note**: Please specify arbor diameter

Mounted 40/60 Grit – 1/8” Return
One-piece construction, 2-1/2” overall shank length

Part Number Slotted	Part Number Unslotted	Outside Diameter	Plated Thickness (Kerf)
49-MS3/4S	49-MS3/4U	3/4" (19 mm)	.80” to .100”
49-MS1S	49-MS1U	1” (25 mm)	
49-MS1-1/4S	49-MS1-1/4U	1-1/4” (32 mm)	
49-MS1-1/2S	49-MS1-1/2U	1-1/2” (38 mm)	
49-MS2S	49-MS2U	2” (51 mm)	
49-MS2-1/2S	49-MS2-1/2U	2-1/2” (64 mm)	
49-MS3S	49-MS3U	3” (76 mm)	
49-MS3-1/2S	49-MS3-1/2U	3-1/2” (89 mm)	
49-MS4S	49-MS4U	4” (102 mm)	.102” to .130”
49-MS4-1/2S	49-MS4-1/2U	4-1/2” (114mm)	
49-MS5S	49-MS-5U	5” (127 mm)	.130” to .150”
49-MS6S	49-MS6U	6” (152 mm)	



***Note**: Please specify arbor diameter

COMPOSITE CUTTING TOOLS

Arbor Mount Diamond Plated Hole Saws

- **MHS series, "Black & Decker" type.**
- **Furnished with windows & slots.**
- **1-1/2" drilling depth (inside depth).**
- **For use with arbors shown below.**



40/60 Grit - 1/8" Return	
Part Number	**Head Diameter**
49-MHS1/2	1/2" (13 mm)
49-MHS9/16	9/16" (14 mm)
49-MHS5/8	5/8" (16 mm)
49-MHS3/4	3/4" (19 mm)
49-MHS7/8	7/8" (22 mm)
49-MHS1	1" (25 mm)
49-MHS1-1/16	1-1/16" (27 mm)
49-MHS1-1/8	1-1/8" (29 mm)
49-MHS1-3/16	1-3/16" (30 mm)
49-MHS1-1/4	1-1/4" (32 mm)
49-MHS1-3/8	1-3/8" (35 mm)
49-MHS1-1/2	1-1/2" (38 mm)

40/60 Grit - 1/8" Return	
Part Number	**Head Diameter**
49-MHS1-3/4	1-3/4" (44 mm)
49-MHS1-7/8	1-7/8" (48 mm)
49-MHS2	2" (51 mm)
49-MHS2-1/4	2-1/4" (57 mm)
49-MHS2-1/2	2-1/2" (64 mm)
49-MHS3	3" (76 mm)
49-MHS3-1/4	3-1/4" (83 mm)
49-MHS3-1/2	3-1/2" (89 mm)
49-MHS4	4" (102 mm)
49-MHS4-1/4	4-1/4" (108 mm)
49-MHS4-1/2	4-1/2" (114 mm)
49-MHS5	5" (127 mm)

MHS Series Hole Saw Arbors

- **For MHS series hole saws above**
- **Quick release for change of hole saws without removing arbor from chuck**
- **Setscrew body for pilot drill adjustment**
- **Also available with pilots**



Part Number	Fits Hole Saw Dia.	Screw Thread	Shank Size	Chuck Size
19-NA-01	9/16" to 1-3/16"	1/2"-20	1/4"	3/8"
49-NA-06	1-1/4" to 6"	5/8"-18	7/16"	1/2"

Flexible Diamond Hand Sanding Pads



Part Number	Grit	Type	Size
92350	70	Plated / Flexible (for grinding)	2-1/2" x 4-1/4" (64 x 108 mm)
92351	120		
92352	220		
92353	400		
92354	600		
92450	220	Resin / Flexible (for finishing)	
92451	600		
92452	1,800		
92453	3,500		

- **These diamond hand sanding pads work best when used wet.**
- **Excellent for composite work**

Diamond Plated Routers



***Note:** Please specify shank diameter. On 3/4” & larger outside diameter routers, minimum shank diameters is 1/2". Larger sizes are available on request.

40/60 Grit					
Part No. Unfluted, Square End *	**Part No. Unfluted, Radius End ***	**Part No. Fluted, Square End ***	**Part No. Fluted, Radius End ***	**Outside Dia.**	**Head Length**
49-R1US	49-R1UR	-	-	1/8” (3.2 mm)	1/4” (6.35 mm)
49-R2US	49-R2UR	-	-		1/2” (13 mm)
49-R3US	49-R3UR	49-R3FS	49-R3FR	1/4” (6.35 mm)	1/4" (6.35 mm)
49-R4US	49-R4UR	49-R4FS	49-R4FR		1/2" (13 mm)
49-R5US	49-R5UR	49-R5FS	49-R5FR		3/4" (19 mm)
49-R6US	49-R6UR	49-R6FS	49-R6FR		1” (25 mm)
49-R7US	49-R7UR	49-R7FS	49-R7FR		1-1/2” (38 mm)
49-R8US	49-R8UR	49-R8FS	49-R8FR	3/8” (10 mm)	3/8” (10mm)
49-R9US	49-R9UR	49-R9FS	49-R9FR		1/2" (13 mm)
49-R10US	49-R10UR	49-R10FS	49-R10FR		3/4” (19mm)
49-R11US	49-R11UR	49-R11FS	49-R11FR		1” (25 mm)
49-R12US	49-R12UR	49-R12FS	49-R12FR		1-1/2” (38 mm)
49-R13US	49-R13UR	49-R13FS	49-R13FR	1/2” (13 mm)	1/2” (13 mm)
49-R14US	49-R14UR	49-R14FS	49-R14FR		3/4" (19 mm)
49-R15US	49-R15UR	49-R15FS	49-R15FR		1” (25 mm)
49-R16US	49-R16UR	49-R16FS	49-R16FR		1-1/2” (38 mm)
49-R17US	49-R17UR	49-R17FS	49-R17FR		2” (51 mm)
49-R18US	49-R18UR	49-R18FS	49-R18FR	5/8” (16 mm)	1/2” (13 mm)
49-R19US	49-R19UR	49-R19FS	49-R19FR		3/4" (19 mm)
49-R20US	49-R20UR	49-R20FS	49-R20FR		1” (25 mm)
49-R21US	49-R21UR	49-R21FS	49-R21FR		1-1/2” (38 mm)
49-R22US	49-R22UR	49-R22FS	49-R22FR		2” (51 mm)
49-R23US	49-R23UR	49-R23FS	49-R23FR	3/4" (19 mm)	1/2” (13 mm)
49-R24US	49-R24UR	49-R24FS	49-R24FR		3/4" (19 mm)
49-R25US	49-R25UR	49-R25FS	49-R25FR		1” (25 mm)
49-R26US	49-R26UR	49-R26FS	49-R26FR		1-1/2” (38 mm)
49-R27US	49-R27UR	49-R27FS	49-R27FR		2” (51 mm)
49-R28US	49-R28UR	49-R28FS	49-R28FR	1” (25 mm)	1/2” (13 mm)
49-R29US	49-R29UR	49-R29FS	49-R29FR		3/4" (19 mm)
49-R30US	49-R30UR	49-R30FS	49-R30FR		1” (25 mm)
49-R31US	49-R31UR	49-R31FS	49-R31FR		1-1/2” (38 mm)
49-R32US	49-R32UR	49-R32FS	49-R32FR		2” (51 mm)
49-R33US	49-R33UR	49-R33FS	49-R33FR	2” (51 mm)	1” (25 mm)
49-R34US	49-R34UR	49-R34FS	49-R34FR		2” (51 mm)

P.B.S. Diamond Plated Jigsaw Blades



Part No.	Fits Jug Saws	Overall Length
49-300	Black & Decker & Competitive	3” (76 mm)
49-301	Rockwell Bayonet	3” (76 mm)
49-303	Rockwell Tiger & Competitive	4” (102 mm)

Part No.	Fits Jug Saws	Overall Length
49-304	Black & Decker & Competitive	4” (102 mm)
49-302	Bosch Style	3” (76 mm)
49-305	Bosch Style	4” (102 mm)

COMPOSITE CUTTING TOOLS

P.B.S. Diamond Plated Twist Drills



- All drills are general purpose, standard length

40/60 Grit – 3/16" Return	
Part Number	**Head Diameter**
49-TD1	1/8" (3.2 mm)
49-TD2	1/4" (6.35 mm)
49-TD3	3/8" (10 mm)
49-TD4	7/16" (11 mm)
49-TD5	1/2" (13 mm)

40/60 Grit – 3/16" Return	
Part Number	**Head Diameter**
49-TD6	5/8" (16 mm)
49-TD7	3/4" (19 mm)
49-TD8	7/8" (22 mm)
49-TD9	1" (25 mm)
-	-

Diamond Plated Integral Pilot Countersinks



Note: Select a base part number for the required cutter (charts below), add a pilot diameter, grit and number of slots (0, 2 or3)

Available Grits: A 30/40 – **B** 40/60 – **C** 60/80
D 120/140 – **E** 220/270

Example: For a 100°, 1/2" diameter cutter with a 5/32" pilot, 40/60 grit and two slots the part number would be **02-50C-5/32-B-2**.

1/4"-28 Thread – 100° Cutter Angle		
Part Number	**Outside Diameter**	**Overall Length**
02-38C	3/8" (10 mm)	1" (25 mm)
02-50C	1/2" (13 mm)	1" (25 mm)
02-62C	5/8" (16 mm)	1" (25 mm)

1/4"-28 Thread – 130° Cutter Angle		
Part Number	**Outside Diameter**	**Overall Length**
02-38D	3/8" (10 mm)	1" (25 mm)
02-50D	1/2" (13 mm)	1" (25 mm)
02-62D	5/8" (16 mm)	1" (25 mm)

CARBIDE COMPOSITE TOOLING
HIGH QUALITY TOOLS

For use on Graphite, Kevlar, Fiberglass and many other composite materials

DRILL REAMER - is used primarily on Fiberglass/Graphite materials.

This 4 flute cutting tool drills & reams while holding extremely close tolerances

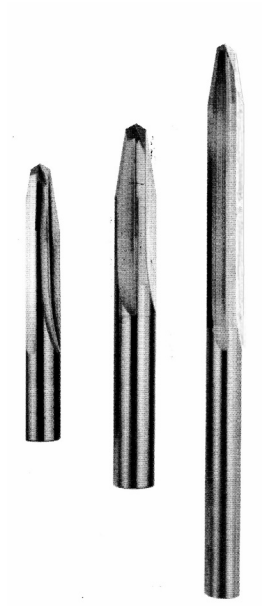

Drill Size	Part-No.	Part-No.	Part-No.
	Overall Length 3"	Overall Length 4"	Overall Length 6"
.0980	DR-0980-3"	DR-0980-4"	DR-0980-6"
.1250	DR-1250-3"	DR-1250-4"	DR-1250-6"
.1285	DR-1285-3"	DR-1285-4"	DR-1285-6"
.1406	DR-1406-3"	DR-1406-4"	DR-1406-6"
.1562	DR-1562-3"	DR-1562-4"	DR-1562-6"
.1590	DR-1590-3"	DR-1590-4"	DR-1590-6"
.1610	DR-1610-3"	DR-1610-4"	DR-1610-6"
.1719	DR-1719-3"	DR-1719-4"	DR-1719-6"
.1875	DR-1875-3"	DR-1875-4"	DR-1875-6"
.1910	DR-1910-3"	DR-1910-4"	DR-1910-6"
.1935	DR-1935-3"	DR-1935-4"	DR-1935-6"
.1990	DR-1990-3"	DR-1990-4"	DR-1990-6"
.2010	DR-2010-3"	DR-2010-4"	DR-2010-6"
.2031	DR-2031-3"	DR-2031-4"	DR-2031-6"
.2188	DR-2188-3"	DR-2188-4"	DR-2188-6"
.2280	DR-2280-3"	DR-2280-4"	DR-2280-6"
.2340	DR-2340-3"	DR-2340-4"	DR-2340-6"
.2380	DR-2380-3"	DR-2380-4"	DR-2380-6"
.2500	DR-2500-3"	DR-2500-4"	DR-2500-6"
.2510	DR-2510-3"	DR-2510-4"	DR-2510-6"

DAGGER DRILL - an excellent tool for drilling Graphite/Epoxy Laminates.

Can even be used in combination with aluminium. No back up required. Feeds and speeds recommendations available.

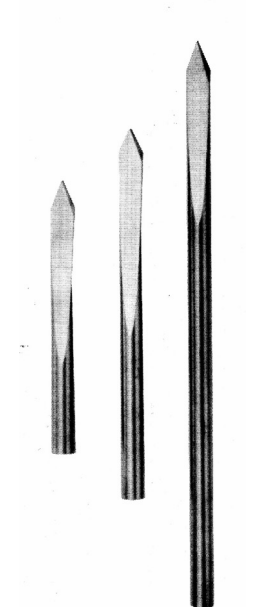

Drill Size	Part-No.	Part-No.	Part-No.
	Overall Length 3"	Overall Length 4"	Overall Length 6"
.1250	DD-1250-3"	DD-1250-4"	DD-1250-6"
.1285	DD-1285-3"	DD-1285-4"	DD-1285-6"
.1406	DD-1406-3"	DD-1406-4"	DD-1406-6"
.1562	DD-1562-3"	DD-1562-4"	DD-1562-6"
.1590	DD-1590-3"	DD-1590-4"	DD-1590-6"
.1610	DD-1610-3"	DD-1610-4"	DD-1610-6"
.1719	DD-1719-3"	DD-1719-4"	DD-1719-6"
.1875	DD-1875-3"	DD-1875-4"	DD-1875-6"
.1910	DD-1910-3"	DD-1910-4"	DD-1910-6"
.1935	DD-1935-3"	DD-1935-4"	DD-1935-6"
.1990	DD-1990-3"	DD-1990-4"	DD-1990-6"
.2010	DD-2010-3"	DD-2010-4"	DD-2010-6"
.2031	DD-2031-3"	DD-2031-4"	DD-2031-6"
.2188	DD-2188-3"	DD-2188-4"	DD-2188-6"
.2280	DD-2280-3"	DD-2280-4"	DD-2280-6"
.2340	DD-2340-3"	DD-2340-4"	DD-2340-6"
.2380	DD-2380-3"	DD-2380-4"	DD-2380-6"
.2500	DD-2500-3"	DD-2500-4"	DD-2500-6"
.2510	DD-2510-3"	DD-2510-4"	DD-2510-6"

Metrische Abmessungen auf Anfrage verfügbar / METRIC DIMENSIONS AVAILABLE ON REQUEST

Solid Carbide Drill Reamer – The Graphinator™



- Patent pending design virtually eliminates fiber break-out and delamination in nearly all of today's advanced composite materials.
- For special material stack-ups, also for aluminum honeycomb and phenolic materials.
- There are many configurations of this tool allowing it to be tailored to specific material properties and manufacturing processes.
- Much longer life compared to other composite drill reamers.

Solid Carbide Jobber Length Drills



- Precision Ground Carbide Drills Are Designed for High Feed Rates With Good Chip Disposal
- Recommended For Use On Cast Iron, Aluminum, Plastic, Composites, Nonferrous Alloys And Other Easily Machined Materials.
- 118° Four Facet Point Angle
- Four Facet Drill Point Minimizes Drill Wander And Assures Accurately Sized Holes

DIAMTER NUMBER	PART NUMBER	DECIMAL EQUIVALENT INCHES	MILLIMETER EQUIVALENT	FLUTE LENGTH INCHES	OVERALL LENGTH INCHES
#5	09-005	.2055	5.22 mm	1-3/4	3
#8	09-008	.1990	5.05 mm	1-3/4	3
#10	09-010	.1935	4.91 mm	1-5/8	2-3/4
#12	09-012	.1890	4.80 mm	1-5/8	2-3/4
#13	09-013	.1850	4.70 mm	1-5/8	2-3/4
#16	09-016	.1770	4.50 mm	1-5/8	2-3/4
#20	09-020	.1610	4.09 mm	1-3/8	2-1/2
#21	09-021	.1590	4.04 mm	1-3/8	2-1/2
#27	09-027	.1440	3.66 mm	1-3/8	2-1/2
#30	09-030	.1285	3.26 mm	1-1/4	2-1/4
#40	09-040	.0980	2.49 mm	1	2
1/16	09-061	.0625	1.59 mm	3/4	1-1/2
5/64	09-062	.0781	1.98 mm	7/8	1-3/4
3/32	09-063	.0938	2.38 mm	1	2
7/64	09-064	.1094	2.78 mm	1-1/4	2-1/4
1/8	09-065	.1250	3.18 mm	1-1/4	2-1/4
9/64	09-066	.1406	3.57 mm	1-3/8	2-1/2
5/32	09-067	.1562	3.97 mm	1-3/8	2-1/2
11/64	09-068	.1719	4.37 mm	1-5/8	2-3/4
3/16	09-069	.1875	4.76 mm	1-5/8	2-3/4
13/64	09-070	.2031	5.16 mm	1-3/4	3
7/32	09-071	.2188	5.56 mm	1-3/4	3
15/64	09-072	.2344	5.95 mm	2	3-1/4
1/4	09-073	.2500	6.35 mm	2	3-1/4
17/64	09-074	.2656	6.75 mm	2-1/8	3-1/2
9/32	09-075	.2812	7.14 mm	2-1/8	3-1/2
19/64	09-076	.2969	7.54 mm	2-3/8	3-3/4
5/16	09-077	.3125	7.94 mm	2-3/8	3-3/4

PCD Spiral Drills

PCD Wafer Tipped Spiral Drill, with improved flexible geometry can drill a wide range of CFRP/Stack materials.
These drills are drilling more than 650 holes in 10mm material thickness.

INCHES				
Part Number	**Diameter – Ø D**	**Shank Ø d**	**Cutting Length**	**Overall Length**
TSD -_ _ _ _	from 0.1250 to 0.1875	0.1875 (3/16”)	1.02	2.44
TSD -_ _ _ _	from 0.1880 to 0.2500	0.250 (1/4”)	1.22	2.76
TSD -_ _ _ _	from 0.2540 to 0.3125	0.3125 (5/16”)	1.46	3.11
TSD -_ _ _ _	from 0.3130 to 0.3750	0.3750 (3/8”)	1.69	3.50
TSD -_ _ _ _	from 0.3800 to 0.4375	0.4375 (7/16”)	1.85	3.74
TSD -_ _ _ _	from 0.4380 to 0.5000	0.5000 (1/2”)	2.01	4.02

P/N Sample with a Ø D of 0.1250: TSD-1250

MILLIMETERS				
Part Number	**Diameter – Ø D**	**Shank Ø d**	**Cutting Length**	**Overall Length**
TSD -_ _ _ _	3.00	3.0 mm	16 mm	46 mm
TSD -_ _ _ _	from 3.01 to 4.00	4.0 mm	22 mm	55 mm
TSD -_ _ _ _	from 4.01 to 5.00	5.0 mm	26 mm	62 mm
TSD -_ _ _ _	from 5.01 to 6.00	6.0 mm	28 mm	66 mm
TSD -_ _ _ _	from 6.01 to 7.00	7.0 mm	34 mm	74 mm
TSD -_ _ _ _	from 7.01 to 8.00	8.0 mm	37 mm	79 mm
TSD -_ _ _ _	from 8.01 to 9.00	9.0 mm	40 mm	84 mm
TSD -_ _ _ _	from 9.01 to 10.00	10.0 mm	43 mm	89 mm
TSD -_ _ _ _	from 10.01 to 11.00	11.0 mm	47 mm	95 mm
TSD -_ _ _ _	from 11.01 to 12.00	12.0 mm	51 mm	102 mm
TSD -_ _ _ _	from 12.01 to 13.00	13.0 mm	51 mm	102 mm
TSD -_ _ _ _	from 13.01 to 14.00	14.0 mm	54 mm	107 mm
TSD -_ _ _ _	from 14.01 to 15.00	15.0 mm	56 mm	111 mm
TSD -_ _ _ _	from 15.01 to 16.00	16.0 mm	58 mm	115 mm

P/N Sample with a Ø D of 3.00 mm: TSD-0300

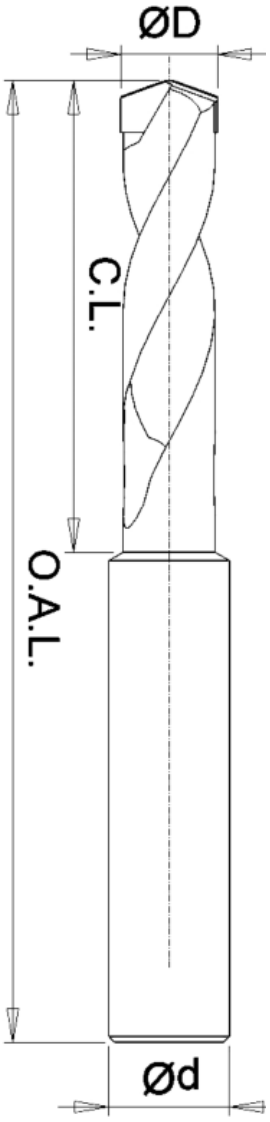



Andere Abmessungen auf Anfrage / OTHER DIMENSIONS ON REQUEST

PCD Helicon Full Nib Spiral Drills

8 or 4 facet drills, destined to be the leader in hole drilling in the aerospace industry,
especially manufactured for the high demands needed by modern CFRP and CFRP/Stacks/AL/TI.
These drills are drilling more than 2,200 holes.

INCHES				
Part Number	**Diameter – Ø D**	**Shank Ø d h6**	**Cutting Length**	**Overall Length**
FND-_ _ _ _	from 0.0980 to 0.1250	0.125 (1/8”)	1.02	2.44
FND-_ _ _ _	from 0.1250 to 0.1875	0.1875 (3/16”)	1.02	2.44
FND-_ _ _ _	from 0.1880 to 0.2500	0.250 (1/4”)	1.22	2.76
FND-_ _ _ _	from 0.2540 to 0.3125	0.3125 (5/16”)	1.46	3.11
FND-_ _ _ _	from 0.3130 to 0.3540	0.3750 (3/8”)	1.69	3.50

P/N Sample with a Ø D of 0.0980: FND-0980

MILLIMETERS				
Part Number	**Diameter – Ø D**	**Shank Ø d h6**	**Cutting Length**	**Overall Length**
FND-_ _ _ _	from 2.50 to 3.00	3.0 mm	16 mm	60 mm
FND-_ _ _ _	from 3.01 to 4.00	4.0 mm	22 mm	75 mm
FND-_ _ _ _	from 4.01 to 5.00	5.0 mm	26 mm	75 mm
FND-_ _ _ _	from 5.01 to 6.00	6.0 mm	28 mm	80 mm
FND-_ _ _ _	from 6.01 to 7.00	8.0 mm	37 mm	85 mm
FND-_ _ _ _	from 7.00 to 8.00	8.0 mm	37 mm	85 mm
FND-_ _ _ _	from 8.01 to 9.00	10.0 mm	43 mm	90 mm
FND-_ _ _ _	from 9.01 to 10.00	10.0 mm	43 mm	90 mm

P/N Sample with a Ø D of 2.50 mm: FND-250

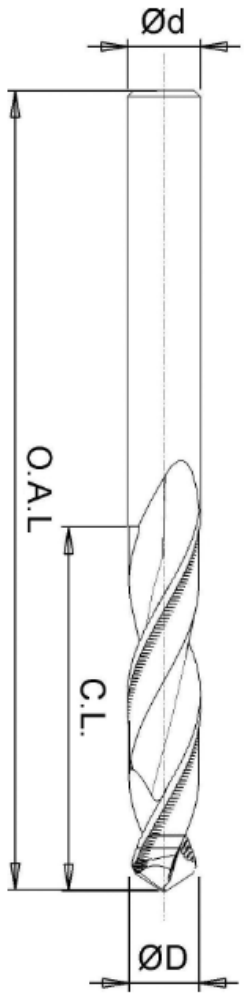

Feedrate (mm/th)	Speed (m/min)	Material Group
0.02-0.45	150-200	CFRP
0.02-0.45	150-200	CFRP/Al
0.02-0.75	10-15	CFRP/Ti

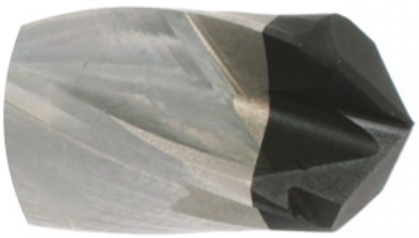

Advantages of PCD
- Longer Tool Life
- Increased Productivity through performance
- Reduced machine down time
- Tighter Tolerances through extended tool life cycle
- Super fine component finishes
- Cost effective solutions

PCD Applications
- Carbon Fiber Reinforced Plastics. (Composite Material) (CFRP)
- Metal Matrix Composites (MMC)
- Aluminum and Aluminum alloys
- Aluminum/CFRP stack
- Titanium/ CFRP stack
- Plastics



Andere Abmessungen auf Anfrage / OTHER DIMENSIONS ON REQUEST

Hartmetall Frässtifte / **CARBIDE BURRS**

4 STANDART CUTS ARE AVAILABLE FOR THE FOLLOWING CARBIDE BURR SHAPES

Industry's widest selection of Burr Shapes and Sizes becomes even more versatile, with a choice of four (4) flute styles for perfect mating of the tool to the job and material and you may choose any of these styles as "standard". Super finished cutting edges give our burs the quality and remarkable long life you've been looking for:

SPECIFICATIONS:
End cuts have basic and intermediate flutes – no zero cutting. Where shank material is listed as "Carbide", the tool is solid carbide, one-piece construction and should be used for heavy duty work whenever possible. Thank tolerances: + .0000 - .0005

A STANDARD CUT | **B** MEDIUM STARCUT | **C** COARSE STARCUT | **D** FINE STARCUT



BURR SELECTION RECOMMENDATIONS:

STANDARD CUT	**(A):**	Use for general purpose deburring of steel, cast iron and other ferrous metals…
MEDIUM STARCUT	**(B):**	Cross-fluted pattern produces a granular chip which induces improved control for portable hand operations…
COARSE STARCUT	**(C):**	Recommended for dressing welds, snagging castings and machining non-ferrous metals, wood and plastics….
FINE STARCUT	**(D):**	Recommended for applications where fine grinding and finish is a prerequisite…
ALUMINIUM STARCUT	**(SA):**	The milling cutter relief flute style provides fast and free ship removal soft
SHANK SIZES:		Are designated for each burr… also available with 3M/M, 6M/M and 8M/M Shanks…

"A" SHAPE (CYLINDRICAL)



PART NO.	HEAD DIA.	HEAD LENGTH	SHANK DIA.	SHANK MAT	END CUT
A4	1/16	3/8	1/8	CARBIDE	NO
A10	3/32	9/16	1/8	CARBIDE	YES
A12	1/8	5/8	1/8	CARBIDE	YES
A14	3/16	5/8	3/16	CARBIDE	NO
A16	1/4	1/2	1/8	STEEL	NO
A18	1/4	3/16	1/8	STEEL	YES
A20	1/4	5/8	1/4	CARBIDE	NO
A22	3/8	3/4	1/4	STEEL	NO
A24	1/2	1	1/4	STEEL	NO
A26	5/8	1	1/4	STEEL	NO
A28	3/4	1	1/4	STEEL	NO

"B" SHAPE (CYLINDRICAL – RADIUS END)



PART NO.	HEAD DIA.	HEAD LENGTH	SHANK DIA.	SHANK MAT	END RAD
B2	1/16	3/8	1/8	CARBIDE	1/32
B4	3/32	3/8	1/8	CARBIDE	3/64
B6	1/8	5/8	1/8	CARBIDE	1/16
B8	3/16	1/2	1/8	CARBIDE	1/16
B10	1/4	5/8	3/16	CARBIDE	3/32
B12	1/4	1/2	1/8	STEEL	1/8
B14	1/4	5/8	1/4	CARBIDE	1/8
B16	3/8	3/4	1/4	STEEL	3/16
B18	1/2	1	1/4	STEEL	1/4
B20	5/8	1	1/4	STEEL	5/16
B22	3/4	1	1/4	STEEL	3/8

"C" SHAPE (POINTED TREE)



PART NO.	HEAD DIA.	HEAD LENGTH	SHANK DIA.	SHANK MAT	END CUT
C2	1/8	1/4	1/8	CARBIDE	NO
C4	1/8	3/8	1/8	CARBIDE	NO
C6	3/16	1/2	3/16	CARBIDE	NO
C8	1/4	1/2	1/8	STEEL	NO
C10	1/4	5/8	1/4	CARBIDE	NO
C12	3/8	3/4	1/4	STEEL	NO
C14	1/2	1	1/4	STEEL	NO
C16	5/8	1	1/4	STEEL	NO
C18	3/4	1	1/4	STEEL	NO

Hartmetall Frässtifte / **CARBIDE BURRS**

"D" SHAPE (TAPER CONE)



PART NO.	HEAD DIA.	HEAD LENGTH	SHANK DIA.	SHANK MAT	INC. ANGLE
D2	1/8	1/2	1/8	CARBIDE	12
D4	1/8	3/8	1/8	CARBIDE	12
D6	3/16	1/2	3/16	CARBIDE	12
D8	1/4	1/2	1/8	STEEL	22
D10	1/4	1/2	1/4	CARBIDE	22
D12	1/4	3/4	1/4	CARBIDE	14
D14	3/8	5/8	1/4	STEEL	28
D16	3/8	1	1/4	STEEL	14
D18	1/2	1	1/4	STEEL	28

"E" SHAPE (INVERTED CONE)



PART NO.	HEAD DIA.	HEAD LENGTH	SHANK DIA.	SHANK MAT	END CUT
E2	1/16	1/16	1/8	CARBIDE	YES
E6	3/32	3/32	1/8	CARBIDE	YES
E8	1/8	3/16	1/8	CARBIDE	YES
E10	3/16	1/4	3/16	CARBIDE	NO
E12	1/4	1/4	1/8	STEEL	YES
E14	1/4	5/16	1/4	CARBIDE	NO
E16	3/8	3/8	1/4	STEEL	NO
E18	1/2	1/2	1/4	STEEL	NO

"F" SHAPE (TAPER CONE – RADIUS END)



PART NO.	HEAD DIA.	HEAD LENGTH	SHANK DIA.	SHANK MAT	INC. ANGLE
F1	1/8	3/8	1/8	CARBIDE	14
F2	3/16	1/2	3/16	CARBIDE	14
F4	1/4	1/2	1/4	CARBIDE	14
F6	1/4	3/4	1/4	CARBIDE	14
F8	3/8	5/8	1/4	STEEL	14
F10	3/8	1-1/16	1/4	STEEL	14
F12	1/2	1-1/8	1/4	STEEL	14
F14	5/8	1-7/16	1/4	STEEL	14
F16	3/4	1-9/16	1/4	STEEL	14

"G" SHAPE (DEBURRING CUTTER 60°)



PART NO.	HEAD DIA.	HEAD LENGTH	SHANK DIA.	SHANK MAT	-
G2	1/8	3/16	1/8	CARBIDE	-
G4	3/16	1/4	3/16	CARBIDE	-
G6	1/4	5/16	1/4	CARBIDE	-
G8	3/8	3/8	1/4	STEEL	-
G10	1/2	1/2	1/4	STEEL	-
G12	5/8	5/8	1/4	STEEL	-
G14	3/4	5/8	1/4	STEEL	-

"K" SHAPE (DEBURRING CUTTER 90°)



PART NO.	HEAD DIA.	HEAD LENGTH	SHANK DIA.	SHANK MAT	-
K2	1/8	3/16	1/8	CARBIDE	-
K4	3/16	1/4	3/16	CARBIDE	-
K6	1/4	5/16	1/4	CARBIDE	-
K8	3/8	3/8	1/4	STEEL	-
K10	1/2	1/2	1/4	STEEL	-
K12	5/8	5/8	1/4	STEEL	-
K14	3/4	3/4	1/4	STEEL	-

"H" SHAPE (TREE – RADIUS END)



PART NO.	HEAD DIA.	HEAD LENGTH	SHANK DIA.	SHANK MAT	END RAD
H2	1/8	13/32	1/8	CARBIDE	3/64
H4	1/8	3/8	1/8	CARBIDE	1/64
H6	3/16	1/2	3/16	CARBIDE	1/64
H8	1/4	1/2	1/8	STEEL	1/16
H10	1/4	5/8	1/4	CARBIDE	1/16
H12	3/8	3/4	1/4	STEEL	3/32
H14	1/2	1	1/4	STEEL	1/8
H16	5/8	1	1/4	STEEL	3/16

Hartmetall Frässtifte / **CARBIDE BURRS**

"I" SHAPE (BALL)



PART NO.	HEAD DIA.	HEAD LENGTH	SHANK DIA.	SHANK MAT	END RAD
I2	1/16	.039	1/8	CARBIDE	.031
I6	3/32	.072	1/8	CARBIDE	.047
I8	1/8	1/8	1/8	CARBIDE	1/16
I10	3/16	3/16	3/16	CARBIDE	3/32
I12	1/4	1/4	1/8	STEEL	1/8
I14	1/4	1/4	1/4	CARBIDE	1/8
I16	3/8	3/8	1/4	STEEL	3/16
I18	1/2	1/2	1/4	STEEL	1/4
I20	5/8	5/8	1/4	STEEL	5/16
I22	3/4	3/4	1/4	STEEL	3/8

"J" SHAPE (OLIVE)



PART NO.	HEAD DIA.	HEAD LENGTH	SHANK DIA.	SHANK MAT	END RAD
J2	1/8	3/16	1/8	CARBIDE	3/64
J4	1/8	3/16	1/8	CARBIDE	1/64
J6	3/16	1/4	3/16	CARBIDE	1/16
J8	1/4	3/8	1/8	STEEL	5/64
J10	1/4	3/8	1/4	CARBIDE	5/64
J12	3/8	5/8	1/4	STEEL	1/8
J14	1/2	3/4	1/4	STEEL	5/32
J16	5/8	1	1/4	STEEL	1/4
J18	3/4	1	1/4	STEEL	5/16

ALUMINIUM STAR CUT

Is designed for Aluminum and non-ferrous material.
Can be used in Air-Tool or Milling Machine.
Excellent for heavy and medium stock removal of soft sticky material.

HEAD DIA.	HEAD LENGTH		PART NO.		PART NO.		PART NO.		PART NO.
3/8	3/4		**A22SA**		**H12SA**		**B16SA**		**F10SA**
1/2	1		**A24SA**		**H14SA**		**B18SA**		**F12SA**
5/8	1		**A26SA**		**H16SA**		**B20SA**		**F14SA**
3/4	1-1/4		**A28SA**		**H18SA**		**B22SA**		**F16SA**



PART NO.	HEAD DIA.
I-16SA	3/8
I-18SA	1/2
I-20SA	5/8
I-22SA	3/4

MINI CARBIDE BURRS WITH 3/32" CARBIDE SHANKS

PART NO.	I-1	I-3	I-5	E-1	E-3	E-5	A-1	A-3	A-5	L-1	L-3	L-5
HEAD DIA.	.039	.055	.072	.039	.055	.072	.039	.055	.072	.039	.055	.072
	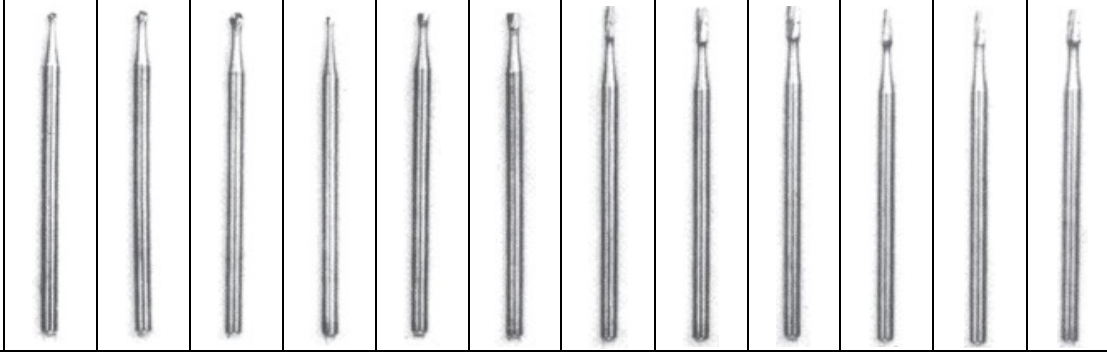											

Pneumatische Winkelschleifer

PNEUMATIC RIGHT ANGLE DIE GRINDER







Features:

- Powerful 5 vane motors deliver high working speeds
- Heavy duty double tapered collet
- Teasing throttle for maximum control
- Lever throttle with lock-off
- Ball bearing construction
- Heavy Duty spiral bevel gearing for durability and smooth operation
- Compact angle head allows access into tight spaces
- Adjustable speed control
- Grease zerk in gear case

CE

Right Angle Die Grinders

Model Number	Free Speed	Weight		Length		Sound Level	Air Consumption		Collet Size	Exhaust
	rpm	lb	kg	in	mm	dB(A)	scfm	l/s		
0.30 hp (0.22 kw) - Lever Throttle										
SAG03S20	20,000	1.2	0.55	5.625	140	85.9	11	5.2	1/4"	Rear
SAG03S20M6	20,000	1.2	0.55	5.625	140	85.9	11	5.2	6 mm	Rear
SAG03S12	12,000	1.2	0.55	5.625	140	82.3	11	5.2	1/4"	Rear
SAG03S12M6	12,000	1.2	0.55	5.625	140	82.3	11	5.2	6 mm	Rear
0.50 hp (0.37 kw) - Lever Throttle										
SAG05S23	23,000	1.4	0.64	6.375	160	86.0	23	10.8	1/4"	Rear
SAG05S23M6	23,000	1.4	0.64	6.375	160	86.0	23	10.8	6 mm	Rear
1 hp (0.75 kw) - Lever Throttle										
SAG10S18	18,000	2.7	1.2	9.0	230	80.7	30	14	1/4"	Rear
SAG10S18M6	18,000	2.7	1.2	9.0	230	80.7	30	14	6 mm	Rear
SAG10S15	15,000	2.7	1.2	9.0	230	79.0	30	14	1/4"	Rear
SAG10S15M6	15,000	2.7	1.2	9.0	230	79.0	30	14	6 mm	Rear
SAG10S12	12,000	2.7	1.2	9.0	230	80.7	30	14	1/4"	Rear
SAG10S12M6	12,000	2.7	1.2	9.0	230	80.7	30	14	6 mm	Rear

General:
Air Inlet Size: 1/4" NPT • Recommended Hose Size: 3/8" (10 mm) • Performance rated @ 90 psig (6.2 bar) air pressure
Standard Equipment:
Parts List • Safety and Instruction Manual • Collet, Support Handle (1 HP only) & Wrenches

Pneumatische Stabschleifer

PNEUMATIC STRAIGHT DIE GRINDER



SDG03S25



SDG7S25F



SDG05S23



SDG10S25F

Heavy Duty Double Tapered Collet

Collet Nut **Collet** **Collet Body**



Part Number	Description
Collet Sizes	
74071	Collet Nut
74072	Collet (1/8")
74073	Collet (3/16")
74074	Collet (1/4")
68030	Collet (3/8")
74075	Collet (3 mm)
74076	Collet (6 mm)
68056	Collet (8 mm)
77057	Collet Body
74070	Collet Body (1 HP)

Features:

- Powerful 5 vane motors deliver high working speeds
- Heavy duty double tapered collet
- Ergonomic comfort grip
- Teasing throttle for maximum control
- Lever throttle with lock-off
- Ball bearing construction
- Adjustable speed control

Straight Die Grinders

CE

Model Number	Free Speed	Weight		Length		Sound Level	Air Consumption		Collet Size	Exhaust
	rpm	lb	kg	in	mm	dB(A)	scfm	l/s		
0.30 hp (0.22 kw) - Lever Throttle										
SDG03S25	25,000	1.0	0.45	6.25	160	83.3	11	5.2	1/4"	Rear
SDG03S25M6	25,000	1.0	0.45	6.25	160	83.3	11	5.2	6 mm	Rear
0.50 hp (0.37 kw) - Lever Throttle										
SDG05S23	23,000	1.2	0.54	7.0	180	85.1	23	10.9	1/4"	Rear
SDG05S23M6	23,000	1.2	0.54	7.0	180	85.1	23	10.9	6 mm	Rear
SDG05S18	18,000	1.2	0.54	7.0	180	87.4	23	10.9	1/4"	Rear
SDG05S18M6	18,000	1.2	0.54	7.0	180	87.4	23	10.9	6 mm	Rear
0.70 hp (0.52 kw) - Lever Throttle										
SDG7S25F	25,000	1.2	0.6	6.0	150	79.6	25	12	1/4"	Front
SDG7S25M6F	25,000	1.2	0.6	6.0	150	79.6	25	12	6 mm	Front
SDG7S18F	18,000	1.2	0.6	6.0	150	81.8	25	12	1/4"	Front
SDG7S18M6F	18,000	1.2	0.6	6.0	150	81.8	25	12	6 mm	Front
1 hp (0.75 kw) - Lever Throttle										
SDG10S25F	25,000	1.7	0.8	7.5	190	83.3	30	14	1/4"	Front
SDG10S25M6F	25,000	1.7	0.8	7.5	190	83.3	30	14	6 mm	Front
SDG10S25R	25,000	1.7	0.8	7.5	190	81.1	30	14	1/4"	Rear
SDG10S25M6R	25,000	1.7	0.8	7.5	190	81.1	30	14	6 mm	Rear
SDG10S18F	18,000	1.7	0.8	7.5	190	80.3	30	14	1/4"	Front
SDG10S18M6F	18,000	1.7	0.8	7.5	190	80.3	30	14	6 mm	Front
SDG10S18R	18,000	1.7	0.8	7.5	190	76.4	30	14	1/4"	Rear
SDG10S18M6R	18,000	1.7	0.8	7.5	190	76.4	30	14	6 mm	Rear
SDG10S12F	12,000	1.7	0.8	7.5	190	85.9	30	14	1/4"	Front
SDG10S12M6F	12,000	1.7	0.8	7.5	190	85.9	30	14	6 mm	Front
SDG10S12R	12,000	1.7	0.8	7.5	190	85.9	30	14	1/4"	Rear
SDG10S12M6R	12,000	1.7	0.8	7.5	190	85.9	30	14	6 mm	Rear

General:
Air Inlet Size: 1/4" NPT • Recommended Hose Size: 3/8" (10 mm) • Performance rated @ 90 psig (6.2 bar) air pressure

Standard Equipment:
Parts List • Safety and Instruction Manual • Collet & Wrenches

ZT3000A POSITIVE FEED DRILL

Design and Features Characteristics

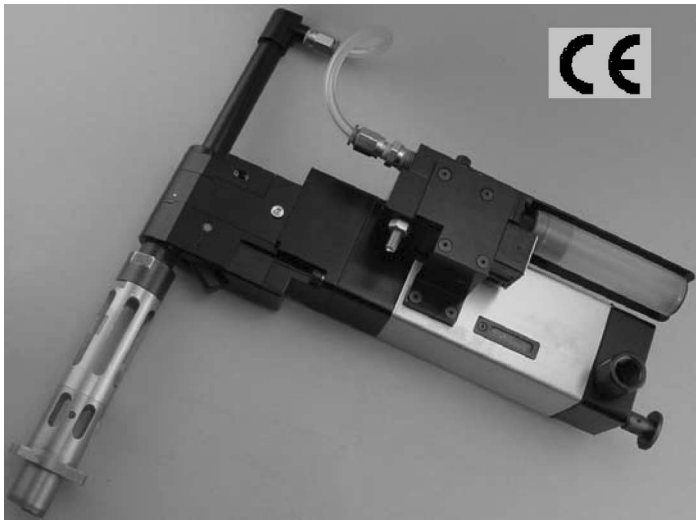

Zephyr's new ZT3000A Positive Feed Drill offers a high power to weight ratio in a compact modular design with ease of operation and maintenance in mind. In addition to its unique features, the ZT3000A offers a wider range of RPM's and feed rates than any other tool in its class. One spindle size (1/2 in.) is used for the full range of RPM's and feed rate configurations.

Capacity
Aluminum 1.25" (31.75 mm)
Steel .75" (19.05mm)
Titanium .75" (19.05mm)

Stroke
Minimum .375" (9.525mm)
Maximum unlimited

RPM
200, 300, 450, 650, 900, 1800, 2800 and 4200 RPM

Feed Rate
.001, .002, .003, .004, .005, .006, .007 and .008 IPR

Weight 6.7 lbs - 3.0 Kg

Features:

1. 1.75 HP motor

2. Right Angle design for close quarter application

3. Designed for oil hole application

4. Spindle utilize 9/16-18 internal thread for standard thread shank drill (adapter for different thread sizes available)

5. One size spindle that can be used for the full range of RPM's and feed rate configurations

6. Advance Air Logic System

- Pull to start/ push to stop
- Auto retract at the end of drilling cycle
- Auto shut off at the completion of the retract cycle
- The tool can start in either feed or the retract mode
- The spindle can be retracted at any given point during the feed cycle by depressing the retract button
- Rapid spindle retraction

Modular Design

1. Air motor housing sub-assembly

- To maximize accessibility, the air hose can be attached into one of the three inlet port locations on the air motor housing
- The air motor housing is easily adapted to any on–board coolant system, such as the Unist Mini-Back lubricators

2. Gear reducer sub-assembly

- Modular designed gear reducers use fewer components while offering a wide range of RPM's

3. Drill head module

- The drill head module can be configured to any of its standard feed rates by simply changing two gears
- Spindle guard sub-assembly can be quickly attached to either on-board coolant system or to any outside coolant system

4. Nose piece Index Mechanism

- Easy access simple to operate index lever
- Allows orientation of the tool around drill axis in 30º increments

5. No adapter needed for standard 1-20 thread nosepiece

ZT3000I POSITIVE FEED DRILL

ZEPHYR® TOOL

Design and Features Characteristics

Zephyr's new ZT3000IA Inline Positive Feed Drill offers a high power to weight ratio in a compact modular design with ease of operation and maintenance in mind. In addition to its unique features, the ZT3000I offers a wider range of RPM's and feed rates than any other tool in its class. One spindle size (1/2 in.) is used for the full range of RPM's and feed rate configurations.

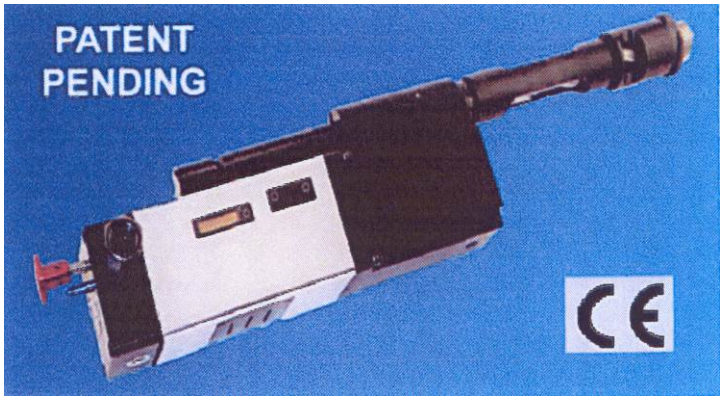

All Parts of the New ZT3000I are interchangeable with the ZT3000A Right Angle Positive Feed Drill.

Capacity
Aluminum 1.25" (31.75 mm)
Steel .75" (19.05mm)
Titanium .75" (19.05mm)

Stroke
Minimum .375" (9.525mm)
Maximum unlimited

RPM
200, 300, 450, 650, 900, 1800, 2800 and 4200 RPM

Feed Rate
.001, .002, .003, .004, .005, .006, .007 and .008 IPR

Weight 8.0 lbs - 3.6 Kg

Features:

1. 1.75 HP motor

2. Right Angle design for close quarter application

3. Designed for oil hole application

4. Spindle utilize 9/16-18 internal thread for standard thread shank drill (adapter for different thread sizes available)

5. One size spindle that can be used for the full range of RPM's and feed rate configurations

6. Advance Air Logic System

- Pull to start/ push to stop
- Auto retract at the end of drilling cycle
- Auto shut off at the completion of the retract cycle
- The tool can start in either feed or the retract mode
- The spindle can be retracted at any given point during the feed cycle by depressing the retract button
- Rapid spindle retraction

Modular Design

1. Air motor housing sub-assembly

- To maximize accessibility, the air hose can be attached into one of the three inlet port locations on the air motor housing
- The air motor housing is easily adapted to any on–board coolant system, such as the Unist Mini-Back lubricators

2. Gear reducer sub-assembly

- Modular designed gear reducers use fewer components while offering a wide range of RPM's

3. Drill head module

- The drill head module can be configured to any of its standard feed rates by simply changing two gears
- Spindle guard sub-assembly can be quickly attached to either on-board coolant system or to any outside coolant system

4. Nose piece Index Mechanism

- Easy access simple to operate index lever
- Allows orientation of the tool around drill axis in 30º increments

5. No adapter needed for standard 1-20 thread nosepiece

ANNIETMUTTER-BOHRMASCHINE

NUTPLATE DRILLMOTOR

NPDM-II B

- Einhandbedienung ermöglicht das Bohren und Senken der beiden Nietenlöcher innerhalb von 4 Sekunden.
- Das Werkzeug kann leicht von einem Nietenlochabstand in einen anderen geändert werden, durch Austauschen von Fußteil und Spindelblock

- ONE HAND OPERATION TO LOCATE, DRILL AND COUNTERSINK BOTH RIVET HOLES IN A SINGLE 4 SECOND OPERATION
- TOOL IS EASILY CONVERTED FROM ONE RIVET HOLE SPACING TO ANOTHER BY INTERCHANGING THE FOOT ATTACHMENTS AND SPINDLE SPACER BLOCK

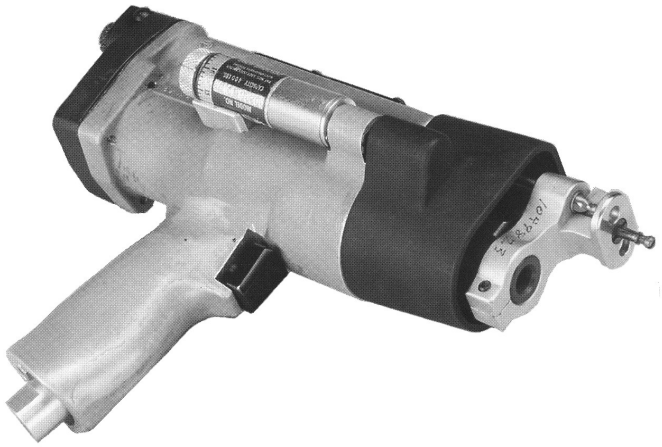

Standardmerkmale:

- ergonomischer Entwurf
- regelbarer Vorschub
- Standardfüße, Spannzangen und Dorne wie bei älterem Modell
- 1,36 kg leichter als älteres Modell
- Annietmutter-Spindelabstände von 5,56 mm bis 28,57 mm.
- gebräuchliche metrische Bohrabstände sind auf Anfrage verfügbar

Standard Features:

- ergonomic design
- fully adjustable feed rate
- standard foot assembly, collet-mandrel and cutters from older model
- 3 lbs. lighter than older model
- accommodates all nutplate spindle spacings from .219 to 1.125 inches.
- popular metric spacings available on special request

Optionales Zubehör:

- C-Bügel Fußteil für das Arbeiten an Profilkanten
- Überdruckpumpe zur Erhöhung der Klemm- und Bohrkraft beim Bohren in zähen Materialien
- Kühlflüssigkeitssystem für verbesserte Standzeiten.
- Abluftrichtung nach vorne, hinten, rechts oder links

Optional Features:

- c-yoke foot attachment for work edge application
- booster pump to increase clamp and thrust forces for drilling in tough materials
- coolant-lubricant system for improved cycle time and increased drill life
- forward, rearward, right or left exhaust direction

Hublänge des Bohrer	DRILL STROKE LENGTH	**0.500 inches / 12,7 mm**
Lieferbare Spindeldrehzahlen	AVAILABLE SPINDLE SPEEDS	**600 and 7,000 RPM / 600 und 7000 UPM**
Vorschub pro Umdrehung	FEED RATE RANGE PER REVOLUTION	**0.001 to 0.012 inches / 0,025 mm bis 0,305 mm**
Motorleistung	AIR MOTOR POWER	**0.54 HP / 0,4 KW**
Betriebsluftverbrauch max.	OPERATING MAXIMUM AIR CONSUMPTION	**18CFM at 90PSI**
Spannzangenklemmbereich	COLLET STROKE LENGTH	**0.250 inch / 6,35 mm**
Gewicht	WEIGHT	**4.75 lbs. / 2,15 kg**

ANNIETMUTTER-BOHRSENKER

NUTPLATE COUNTERSINK DRILL

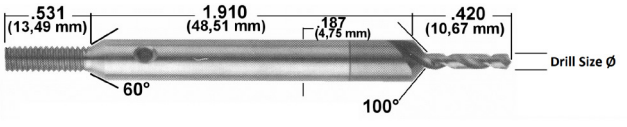

GEWINDE/THREAD 8-32

Artikel-Nummer / PART NO.:	Drill Size	
HPD30C-100-35-8	**#30 (3,26mm)**	**Vollhartmetall** / SOLID CARBIDE
HPD30M42-100-35-8	**#30 (3,26mm)**	**HSS-E (Cobalt)** / COBALT
HPD40C-100-35-8	**#40 (2,50mm)**	**Vollhartmetall** / SOLID CARBIDE
HPD40M42-100-35-8	**#40 (2,50mm)**	**HSS-E (Cobalt)** / COBALT

Andere Abmessungen auf Anfrage / OTHER DIMENSIONS ON REQUEST

Cleco Variable Speed Air Drills



- Calibrated dial on rear of tool simplifies drill speed selection
- Choice of three governed speed models to match material
- Can be used with feed assist for accurate, perpendicular holes
- Includes keyed chuck

3/8” Capaciy - 0.7 hp (0.52 kW) - Non-Reversible				
Art.Nr./PART NO.	**RPM (no load)**	**RPM (governed)**	**Overall Length**	**Weight**
135DPV-7B-43	600	150 - 550	9-5/8” (244 mm)	3.625 lbs (1.6 kg)
135DPV -14B-51	1250	400 - 1200	9-1/4” (235 mm)	3.375 lbs (1.5 kg)
135DPV -28B-51	2600	700 - 2400	8-1/2” (216 mm)	3.125 lbs (1.4 kg)

1/2” Capaciy - 0.7 hp (0.52 kW) - Non-Reversible				
Art.Nr./PART NO.	**RPM (no load)**	**RPM (governed)**	**Overall Length**	**Weight**
135DPV-7B-50*	600	150 - 550	9-5/8” (244 mm)	3.625 lbs (1.6 kg)
135DPV-14B-50*	1250	400 - 1200	9-1/4” (235 mm)	3.375 lbs (1.5 kg)

Support Handle	
Art.Nr./PART NO.	**Description**
861006	* 135DPV Drills must be equipped with support handle (861006) if 1/2" (13mm) capacity chuck is specified.

Boelube Lubricant

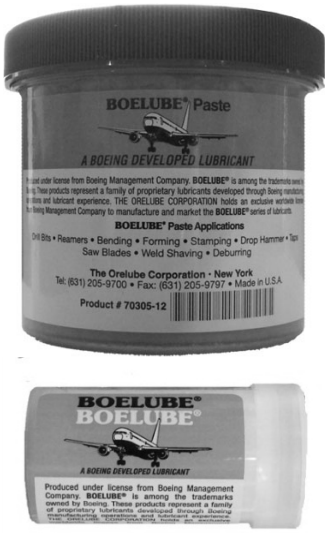

- High-strength polar lubricating film reduces friction & heat generation.
- Greatly improves tool life, surface finish & hole quality.
- Superior lubricity when machining aluminum, titanium and inconel.
- Non-corrosive, non-flammable, chemically stable, with no hazardous substance.

Art.Nr./PART NO.	**Type**	**Size**
70200-00	Solid	14.5 Oz. Cartridge
70200-13		1.6 Oz. Push Tube
70200-40		3.5 Oz. Push Tube
70302-12	Paste / Soft / Blue	12 Oz. Jar
70307-12	Paste / Medium / Blue	12 Oz. Jar
70305-12	Paste / Hard / Pink	12 Oz. Jar
70104-04	Liquid	1 Gallon Pail
70104-05		5 Gallon Pail
70104-07		15 Gallon Drum
70104-09		55 Gallon Drum

Pneumatische Bohrmaschinen Pistolenform
PNEUMATIC PISTOL GRIP DRILLS

PISTOL GRIP DRILLS



Performance:
Power: 0.33 hp (0.25 kw) - 1 hp (0.75 kw)
Speed Range: 360 rpm - 6000 rpm
Chuck Capacity: 1/4" (6 mm) - 1/2" (13 mm)

Features:
Reversible and Non-Reversible
Trigger Start
Rotatable Exhaust (0.33 hp models)
Rubber Grip

CE

Pistol Grip Drills

Model Number	Chuck Capacity		Free Speed	Weight		Length		Side To Center		Maximum Air Consumption		Sound Level	Spindle Thread
	in.	mm	rpm	lb	kg	in.	mm	in.	mm	cfm	l/s	dB(A)	
.33 hp (0.25 kw) - Non-reversible													
1410	1/4	6	2600	1.3	0.60	6.3	160	0.6	15	12	6	75	3/8"-24
DR1412	1/4	6	3600	1.3	0.60	6.3	160	0.6	15	12	6	75	3/8"-24
DR1414	1/4	6	4300	1.3	0.60	6.3	160	0.6	15	12	6	75	3/8"-24
DR1416	1/4	6	6000	1.3	0.60	6.3	160	0.6	15	12	6	75	3/8"-24
1 hp (0.75 kw) - Non-reversible													
SDR10P60N2	1/4	6	6000	2.3	1.05	6.5	165	0.8	20	30	14	80	3/8"-24
SDR10P60N3	3/8	10	6000	2.5	1.10	7.0	180	0.8	20	30	14	80	3/8"-24
SDR10P40N2	1/4	6	4000	2.3	1.05	6.5	165	0.8	20	30	14	80	3/8"-24
SDR10P40N3	3/8	10	4000	2.5	1.10	7.0	180	0.8	20	30	14	80	3/8"-24
SDR10P26N2	1/4	6	2600	2.3	1.05	6.5	165	0.8	20	30	14	80	3/8"-24
SDR10P26N3	3/8	10	2600	2.5	1.10	7.0	180	0.8	20	30	14	80	3/8"-24
SDR10P26N4	1/2	13	2600	2.9	1.30	7.5	190	0.8	20	30	14	80	1/2"-20
SDR10P12N3	3/8	10	1200	2.9	1.30	8.0	205	0.8	20	30	14	80	3/8"-24
SDR10P7N3	3/8	10	700	2.9	1.30	8.0	205	0.8	20	30	14	80	1/2"-20
SDR10P7N4	1/2	13	700	3.3	1.50	8.5	215	0.8	20	30	14	80	1/2"-20
SDR10P4N3	3/8	10	400	2.9	1.30	8.0	205	0.8	20	30	14	80	1/2"-20
SDR10P4N4	1/2	13	400	3.3	1.50	8.5	215	0.8	20	30	14	80	1/2"-20
1 hp (0.75 kw) - Non-reversible													
3P1530	3/8	10	2150	4.3	2.00	7.5	190	1-1/32	26	33	15	80	1/2"-20
3P1430	3/8	10	1400	5.0	2.30	8.8	224	1-1/32	26	33	15	80	1/2"-20
3P1640	1/2	13	2650	4.3	2.00	7.5	190	1-1/32	26	33	15	80	1/2"-20
3P1340	1/2	13	1000	5.0	2.30	8.8	224	1-1/32	26	33	15	80	1/2"-20
3P1240	1/2	13	650	5.0	2.30	8.8	224	1-1/32	26	33	15	80	1/2"-20
3P1140	1/2	13	360	5.0	2.30	8.8	224	1-1/32	26	33	15	80	1/2"-20
1 hp (0.75 kw) - Non-reversible With Keyless Chuck													
SDR10P60NK3	3/8	10	6000	2.5	1.10	7.0	180	0.8	20	30	14	80	3/8"-24
SDR10S40NK3	3/8	10	4000	2.3	1.05	8.3	210	0.8	19	30	14	78	3/8"-24
SDR10P26NK3	3/8	10	2600	2.3	1.00	6.3	160	0.8	20	25	12	80	3/8"-24
SDR10P26NK4	1/2	13	2600	2.7	1.20	6.6	170	0.8	20	25	12	80	1/2"-20
SDR10P12NK3	3/8	10	1200	2.7	1.20	7.3	185	0.8	20	25	12	80	3/8"-24
SDR10P7NK4	1/2	13	700	3.1	1.40	7.8	200	0.8	20	25	12	80	1/2"-20
SDR10P4NK4	1/2	13	400	3.1	1.40	7.8	200	0.8	20	25	12	80	1/2"-20

Pneumatische Bohrmaschinen Pistolenform
PNEUMATIC PISTOL GRIP DRILLS



Performance:
Power: 0.20 hp (0.15 kw) - 1 hp (0.75 kw)
Speed Range: 300 rpm - 6000 rpm
Chuck Capacity: 1/4" (6 mm) - 1/2" (13 mm)

Features:
Reversible and Non-Reversible
Trigger Start
Rotatable Exhaust (1410 series models)
Rubber Grip

CE

Pistol Grip Drills

Model Number	Chuck Capacity		Free Speed	Weight		Length		Side To Center		Maximum Air Consumption		Sound Level	Spindle Thread
	in.	mm	rpm	lb	kg	in.	mm	in.	mm	cfm	l/s	dB(A)	
.60 hp (0.45 kw) - Non-Reversible													
SDR6P60N2	1/4	6	6000	2.1	0.95	5.8	145	0.8	20	25	12	80	3/8"-24
SDR6P60N3	3/8	10	6000	2.3	1.00	6.3	160	0.8	20	25	12	80	3/8"-24
SDR6P40N2	1/4	6	4000	2.1	0.95	5.8	145	0.8	20	25	12	80	3/8"-24
SDR6P40N3	3/8	10	4000	2.3	1.00	6.3	160	0.8	20	25	12	80	3/8"-24
SDR6P26N2	1/4	6	2600	2.1	0.95	5.8	145	0.8	20	25	12	80	3/8"-24
SDR6P26N3	3/8	10	2600	2.3	1.00	6.3	160	0.8	20	25	12	80	3/8"-24
SDR6P26N4	1/2	13	2600	2.7	1.20	6.6	170	0.8	20	25	12	80	1/2"-20
SDR6P12N3	3/8	10	1200	2.7	1.20	7.3	185	0.8	20	25	12	80	1/2"-20
SDR6P7N3	3/8	10	700	2.7	1.20	7.3	185	0.8	20	25	12	80	1/2"-20
SDR6P7N4	1/2	13	700	3.1	1.40	7.8	200	0.8	20	25	12	80	1/2"-20
SDR6P4N3	3/8	10	400	2.7	1.20	7.3	185	0.8	20	25	12	80	1/2"-20
SDR6P4N4	1/2	13	400	3.1	1.40	7.8	200	0.8	20	25	12	80	1/2"-20
.60 hp (0.45 kw) - Non-Reversible With Keyless Chuck													
SDR6P60NK3	3/8	10	6000	2.3	1.00	6.3	160	0.8	20	25	12	80	3/8"-24
SDR6P40NK3	3/8	10	4000	2.3	1.00	6.3	160	0.8	20	25	12	80	3/8"-24
SDR6P26NK3	3/8	10	2600	2.3	1.00	6.3	160	0.8	20	25	12	80	3/8"-24
.20 hp (0.15 kw) - Reversible													
1412R	1/4	6	2600	1.3	0.60	6.3	160	0.6	15	10	5	75	3/8"-24
1410R	1/4	6	2000	1.3	0.60	6.3	160	0.6	15	10	5	75	3/8"-24
0.80 hp (0.60 kw) - Reversible													
3P2340	1/2	13	850	5.0	2.30	8.8	224	1-1/32	26	33	15	81	1/2"-20
3P2140	1/2	13	300	5.0	2.30	8.8	224	1-1/32	26	33	15	81	1/2"-20
1 hp (0.75 kw) - Reversible													
SDR10P40R2	1/4	6	4000	2.4	1.10	7.1	180	0.8	20	30	14	80	3/8"-24
SDR10P40R3	3/8	10	4000	2.6	1.15	7.6	195	0.8	20	30	14	80	3/8"-24
SDR10P25R2	1/4	6	2500	2.4	1.10	7.1	180	0.8	20	30	14	80	3/8"-24
SDR10P25R3	3/8	10	2500	2.6	1.15	7.6	195	0.8	20	30	14	80	3/8"-24
SDR10P20R2	1/4	6	2000	2.4	1.10	7.1	180	0.8	20	30	14	80	3/8"-24
SDR10P20R3	3/8	10	2000	2.6	1.15	7.6	195	0.8	20	30	14	80	3/8"-24
SDR10P20R4	1/2	13	2000	3.0	1.35	7.9	200	0.8	20	30	14	80	1/2"-20
SDR10P7R3	3/8	10	700	3.1	1.40	8.6	220	0.8	20	30	14	80	3/8"-24
SDR10P7R4	3/8	10	700	3.6	1.60	9.1	230	0.8	20	30	14	80	1/2"-20
SDR10P5R3	3/8	10	500	3.1	1.40	8.6	220	0.8	20	30	14	80	1/2"-20
SDR10P5R4	1/2	13	500	3.6	1.60	9.1	230	0.8	20	30	14	80	1/2"-20
SDR10P3R3	3/8	10	300	3.1	1.40	8.6	220	0.8	20	30	14	80	1/2"-20
SDR10P3R4	1/2	13	300	3.6	1.60	9.1	230	0.8	20	30	14	80	1/2"-20

Pneumatische Bohrmaschinen in gerader Form
PNEUMATIC STRAIGHT DRILLS

STRAIGHT DRILLS



SDR10S25R3



SDR10S26N3



1420

Performance:
Power: 0.33 hp (0.25 kw) - 1 hp (0.75 kw)
Speed Range: 300 rpm - 6000 rpm
Chuck Capacity: 1/4" (6 mm) - 1/2" (13 mm)

Features:
Reversible and Non-Reversible
Lever Start
Rubber Grip (1420, 1422)

CE

Straight Drills

Model Number	Chuck Capacity		Free Speed	Weight		Length		Side To Center		Maximum Air Consumption		Sound Level	Spindle Thread
	in.	mm	rpm	lb	kg	in.	mm	in.	mm	cfm	l/s	dB(A)	
.33 hp (0.25 kw) - Non-reversible													
1422	1/4	6	3600	1.2	0.54	8.0	203	.6	15	12	6	75	3/8"-24
1420	1/4	6	2600	1.2	0.54	8.0	203	.6	15	12	6	75	3/8"-24
1 hp (0.75 kw) - Non-reversible													
SDR10S60N2	1/4	6	6000	2.3	1.05	8.3	211	0.8	19	30	14	78	3/8"-24
SDR10S60N3	3/8	10	6000	2.3	1.05	8.3	211	0.8	19	30	14	78	3/8"-24
SDR10S40N2	1/4	6	4000	2.3	1.05	8.3	211	0.8	19	30	14	78	3/8"-24
SDR10S40N3	3/8	10	4000	2.3	1.05	8.3	211	0.8	19	30	14	78	3/8"-24
SDR10S26N2	1/4	6	2600	2.3	1.05	8.3	211	0.8	19	30	14	78	3/8"-24
SDR10S26N3	3/8	10	2600	2.3	1.05	8.3	211	0.8	19	30	14	78	3/8"-24
SDR10S12N3	3/8	10	1200	2.8	1.25	9.3	236	0.8	19	30	14	78	3/8"-24
SDR10S7N3	3/8	10	700	2.8	1.25	9.3	236	0.8	19	30	14	78	3/8"-24
SDR10S4N3	3/8	10	400	2.8	1.25	9.3	236	0.8	19	30	14	78	3/8"-24
SDR10S4N4	1/2	13	400	2.8	1.25	9.3	236	0.8	19	30	14	78	1/2"-20
1 hp (0.75 kw) - Reversible													
SDR10S25R2	1/4	6	2500	2.2	1.00	9.3	235	0.8	19	30	14	78	3/8"-24
SDR10S25R3	3/8	10	2500	2.3	1.05	9.8	248	0.8	19	30	14	78	3/8"-24
SDR10S20R2	1/4	6	2000	2.2	1.00	9.3	235	0.8	19	30	14	78	3/8"-24
SDR10S20R3	3/8	10	2000	2.3	1.05	9.8	248	0.8	19	30	14	78	3/8"-24
SDR10S20R4	1/2	10	2000	2.8	1.25	10.3	260	0.8	19	30	14	78	1/2"-20
SDR10S12R3	3/8	10	1200	2.8	1.25	10.8	273	0.8	19	30	14	78	3/8"-24
SDR10S12R4	1/2	13	1200	3.2	1.45	11.3	285	0.8	19	30	14	78	1/2"-20
SDR10S7R3	3/8	10	700	2.8	1.25	10.8	273	0.8	19	30	14	78	1/2"-20
SDR10S7R4	1/2	13	700	3.2	1.45	11.3	285	0.8	19	30	14	78	1/2"-20
SDR10S5R3	3/8	10	500	2.8	1.25	10.8	273	0.8	19	30	14	78	1/2"-20
SDR10S5R4	1/2	13	500	3.2	1.45	11.3	285	0.8	19	30	14	78	1/2"-20
SDR10S3R3	3/8	10	300	2.8	1.25	10.8	273	0.8	19	30	14	78	1/2"-20
SDR10S3R4	1/2	13	300	3.2	1.45	11.3	285	0.8	19	30	14	78	1/2"-20

Pneumatische Winkelbohrmaschinen
PNEUMATIC ANGLE DRILLS

MINIATURE ANGLE DRILLS



1AM1551B



2L1380



1AM1541



1AM1141SRK

Performance:
Power: 0.33 hp (0.25 kw) - 0.75 hp (0.56 kw)
Speed Range: 540 rpm - 5800 rpm

Features:
Non-Reversible
Lever Start
45˚ or 90˚ Minature Angle Heads (except 2L1380)
180˚ Adjustable Rotating Head (2L1380)

CE

Miniature Angle Drills

Model Number	Free Speed	Weight		Length		Side To Center		Maximum Air Consumption		Sound Level
	rpm	lb	kg	in.	mm	in.	mm	cfm	l/s	dB(A)
45˚ Angle Head - .33 hp (0.25 kw) - 1/4"-28 Internal Thread Spindle										
1AM1541	2800	1.5	0.7	10.2	259	0.3	8	12	6	75
1AM1441	2200	1.5	0.7	10.2	259	0.3	8	12	6	75
45˚ Angle Head - .75 hp (0.56 kw) - 1/4"-28 Internal Thread Spindle										
2A1410-45	5800	2.7	1.3	12.0	305	0.3	8	28	13	85
90˚ Angle Head - .33 hp (0.25 kw) - 1/4"-28 Internal Thread Spindle										
1AM1551B	2800	1.5	0.7	9.7	246	0.3	8	12	6	75
1AM1451B	2200	1.5	0.7	9.7	246	0.3	8	12	6	75
90˚ Angle Head - .33 hp (0.25 kw) - 9/32"-40 Internal Thread Spindle										
1AM1552B	2800	1.5	0.7	9.7	246	0.3	8	12	6	75
1AM1452B	2200	1.5	0.7	9.7	246	0.3	8	12	6	75
90˚ Angle Head - .75 hp (0.56 kw) - 1/4"-28 Internal Thread Spindle										
2A1410-AH	5800	2.7	1.3	11.4	290	0.3	8	28	13	85
2A1510-AH	540	3.1	1.4	12.8	325	0.3	8	28	13	85
180˚ Rotating Head - .75 hp (0.56 kw) - Chuck Capacity: #70 thru 1/4"										
2L1380	3350	2.3	1.1	13.7	348	0.6	15	28	13	85
Sealant Removal Tool Kit										
1AM1141/51K	800	1.8	.80	11.5	292	0.3	8	12	6	75
Includes 1AM1151 (90˚ Angle Drill) and 65213 (45 Deg Angle Drill Head Assembly)										
1AM1141SRK	800	1.8	.80	11.5	292	0.3	8	12	6	75
Includes 1AM1141 (45˚ Angle Drill)										
1AM1151SRK	800	1.8	.80	11.5	292	0.3	8	12	6	75
Includes 1AM1151 (90˚ Angle Drill)										

Desoutter Compact Angle Drills

30°/45° Angle - 0.4 hp (0.3 kW)





30° Angle - Spannzange bis 5mm / Collet for max. 5mm				
Part Number	**Type**	**Free RPM**	**Overall Length**	**Weight**
DR300-T5500-T5-30	Collet Typ A 	5500	11-1/4" (286 mm)	1.36 lbs
DR300-T4500-T5-30		4500		1.36 lbs
DR300-T3000-T5-30		3000		1.36 lbs
DR300-T2000-T5-30		2000		1.36 lbs
DR300-T1000-T5-30		1000		1.54 lbs

45° Angle - Spannzange bis 5mm / Collet for max. 5mm				
Part Number	**Type**	**Free RPM**	**Overall Length**	**Weight**
DR300-T5500-T5-45	Collet Typ A 	5500	11-1/4" (286 mm)	1.49 lbs
DR300-T4500-T5-45		4500		1.49 lbs
DR300-T3000-T5-45		3000		1.49 lbs
DR300-T2000-T5-45		2000		1.49 lbs
DR300-T1000-T5-45		1000		1.49 lbs

360° Angle 0.4 hp (0.3 kW)



Spannzange bis 5mm / Collet for max. 5mm				
Part Number	**Type**	**Free RPM**	**Overall Length**	**Weight**
DR300-T5500-T5-360	Collet Typ A 	5500	11-1/8" (283 mm)	1.54 lbs
DR300-T4500-T5-360		4500		1.54 lbs
DR300-T3000-T5-360		3000		1.54 lbs
DR300-T2000-T5-360		2000		1.54 lbs
DR300-T1000-T5-360		1000		1.72 lbs

Spannzange bis 6,4mm / Collet for max. 6,4mm				
Part Number	**Type**	**Free RPM**	**Overall Length**	**Weight**
DR300-T5500-T6-360	Collet Typ B 	5500	11-1/8" (283 mm)	1.87 lbs
DR300-T4500-T6-360		4500		1.87 lbs
DR300-T3000-T6-360		3000		1.69 lbs
DR300-T2000-T6-360		2000		1.87 lbs
DR300-T1000-T6-360		1000		1.87 lbs

90° Angle - 0.4 hp (0.3 kW)



Spannzange bis 5mm / Collet for max. 5mm				
Part Number	**Type**	**Free RPM**	**Overall Length**	**Weight**
DR300-T5500-T5-90	Collet Typ A 	5500	10-3/4" (273 mm)	1.36 lbs
DR300-T4500-T5-90		4500		1.36 lbs
DR300-T3000-T5-90		3000		1.36 lbs
DR300-T2000-T5-90		2000		1.36 lbs
DR300-T1000-T5-90		1000		1.54 lbs

Spannzange bis 6,4mm / Collet for max. 6,4mm				
Part Number	**Type**	**Free RPM**	**Overall Length**	**Weight**
DR300T-5500-T6-90	Collet Typ B 	5500	10-3/4" (273 mm)	1.49 lbs
DR300T-4500-T6-90		4500		1.49 lbs
DR300T-3000-T6-90		3000		1.49 lbs
DR300T-2000-T6-90		2000		1.49 lbs
DR300T-1000-T6-90		1000		1.67 lbs

Spannzangen
COLLETS



TYP A



TYP B

A	Art.Nr./PART NO.	B	Art.Nr./PART NO.	Spannzangen Durchmesser COLLET DIAMETER
	2172		**-**	1.0 mm
	2182		**-**	1.1 mm
	2192		**-**	1.2 mm
	2202		**-**	1.3 mm
	2212		**-**	1.4 mm
	2222		**-**	1.5 mm
	2232		**18922**	1.6 mm (1/16”)
	2242		**-**	1.7 mm
	2252		**18932**	1.8 mm
	2262		**-**	1.9 mm
	2272		**18942**	2.0 mm
	2282		**-**	2.1 mm
	2292		**18952**	2.2 mm
	2302		**-**	2.3 mm
	2312		**18962**	2.4 mm (3/32")
	2322		**-**	2.5 mm
	2332		**18972**	2.6 mm
	2342		**-**	2.7 mm
	2352		**18982**	2.8 mm
	2362		**-**	2.9 mm
	2372		**18992**	3.0 mm
	2382		**-**	3.1 mm
	2392		**19002**	3.2 mm (1/8")
	2402		**-**	3.3 mm
	2412		**19022**	3.4 mm
	2422		**-**	3.5 mm
	2432		**19032**	3.6 mm
	2442		**-**	3.7 mm
	2452		**19042**	3.8 mm
	2462		**-**	3.9 mm
	2472		**19052**	4.0 mm (5/32“)
	2482		**-**	4.1 mm
	2492		**19062**	4.2 mm
	2502		**-**	4.3 mm
	2512		**19072**	4.4 mm
	2522		**-**	4.5 mm
	2532		**19082**	4.6 mm
	2542		**-**	4.7 mm
	2552		**19092**	4.8 mm (3/16")
	2562		**-**	4.9 mm
	2572		**19102**	5.0 mm
	-		**19122**	5.2 mm
	-		**19132**	5.4 mm
	-		**-**	5.5 mm
	-		**19142**	5.6 mm
	-		**19152**	5.8 mm
	-		**19162**	6.0 mm
	-		**19172**	6.2 mm
	-		**19182**	6.4 mm

OFFSET ANGLE DRILL

AT331

The AT331 Series Offset Angle Drills are designed to reach inaccessable areas: Equipped with anti-friction ball bearings for smooth, trouble-free operation at speeds up to 10,000 rpm without overheating. Standard with 1/4'' shank, and either 1/4-28 or 10-32 threaded spindle.

NOTE: When ordering, specify: Basic Part Number (AT331) and the spindle thread required.

ORDER BY BASIC PART NUMBER

BASIC PART NO.	SPINDLE THREADS
AT331A	10-32
AT331B	1/4-28

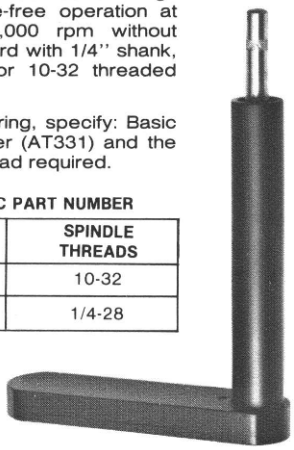

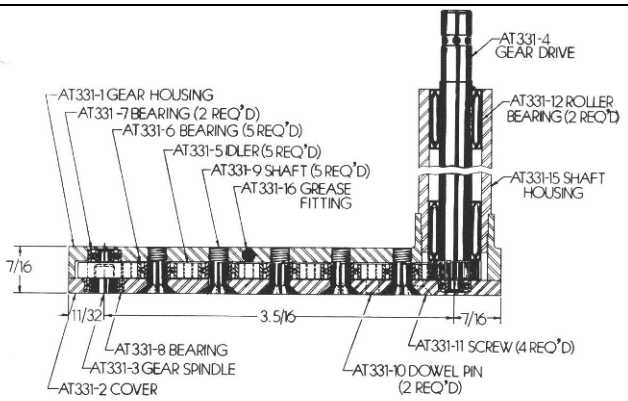

OFFSET ANGLE DRILL

AT332

The AT332 Series Offset Angle Drills are designed to reach inaccessable areas: Equipped with anti-friction ball bearings for smooth, trouble-free operation at speeds up to 10,000 rpm without overheating. Standard with 1/4'' shank, and either 1/4-28 or 10-32 threaded spindle.

NOTE: When ordering, specify: Part Number (AT332) and the spindle thread required.

ORDER BY BASIC PART NUMBER

BASIC PART NO.	SPINDLE THREADS
AT332A	10-32
AT332B	1/4-28

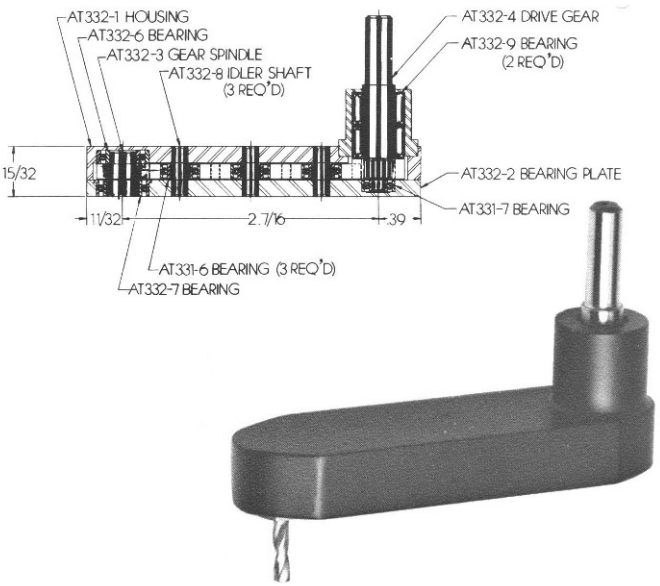

Drills offset for those places inaccessible for ordinary drills. Housings encase heat treated gears, with shafts hardened and precision ground to take the toughest task with ease.

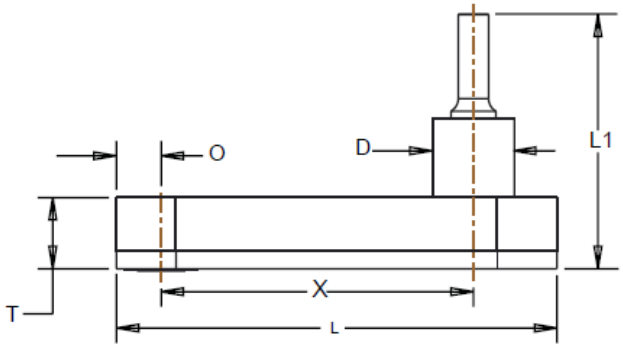

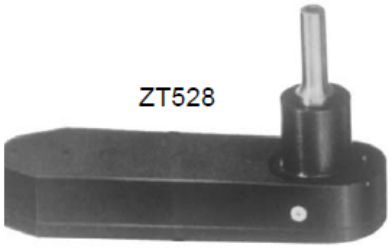

MODEL	SPINDLE THREAD	SPINDLE OFFSET O	DRILL OFFSET X	OVERALL LENGTH L	LENGTH SHORT END L1	BODY THICKNESS T	MOUNT DIAMETER D	MAX.REC. CAP.
ZT528-B	5/16"-24	3/8"	2-5/8"	3-11/16"	2-1/8"	5/8"	11/16"	5/16"
ZT528-C	1/4"-28							

Offset drills for those "hard to get at" areas. Heat treated gears, Hardened and precision ground shafts, make this tool acceptable for the toughest jobs.

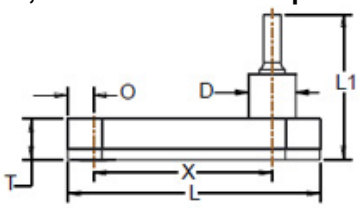



ZT535



ZT622
REVERSE SPINDLE TYPE

ZT721



ZT733

Model	Spindle Thread	Spindle Offset O	Drill Offset X	Overall Length L	Length Short End L1	Body Thick T	Mount Dia. D	Max.Rec. Cap.
ZT535-C	1/4-28“	5/16“	3-13/16“	4-35/64“	1-61/64“	17/32“	11/16“	1/4"
ZT535-D	#10-32							
ZT535-G	#5-40							
ZT622-C	1/4-28“	5/16“	3-1/8“	3-7/8“	1-61/64“	17/32“	11/16“	1/4"
ZT622-D	#10-32							
ZT622-G	#5-40							
ZT721-C	1/4-28“	5/16“	2-29/64“	3-13/64“	1-15/16“	1/2“	11/16“	1/4"
ZT721-D	#10-32							
ZT721-G	#5-40							
ZT733-C	1/4-28“	5/16“	2-15/32“	3-7/32“	1-13/16“	3/8“	11/16“	3/16“
ZT733-D	#10-32							
ZT733-G	#5-40							

The ZT561/ZT562/ZT563 series flat offset angle drills.
Extra thin drills which allow access into tight areas. All steel housings, heat treated gears, hardened and precision ground shafts tackle the toughest of tasks with ease.

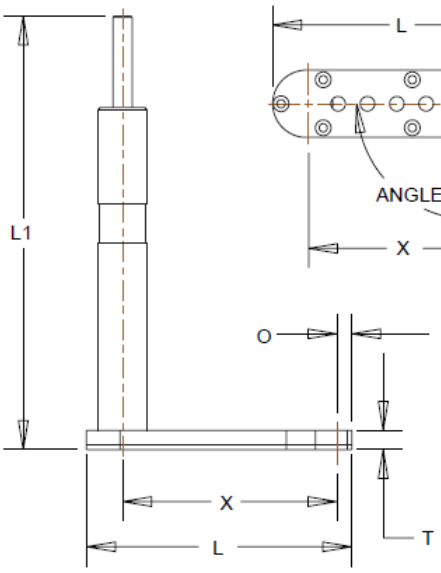



Model	Spindle Thread	Spindle Offset O	Drill Offset X	Overall Length L	Length L1	Body Thick. T	Body Width W	Angle	Drill Cap.
ZT562	10-32	9/32“	2.5/8“	3.7/16“	5.11/16“	¼“	7/8“	30° R.H.	1/8“
ZT563			2.5/8“	3.7/16“	5.11/16“			30° L.H.	
ZT561			3.3/64“	3.13/16	5.11/16“			STRAIGHT	
ZT762			2.5/8“	3.7/16“	1.13/16“			30° R.H.	
ZT763			2.5/8“	3.7/16“	1.13/16“			30° L.H.	
ZT761			3.3/64“	3.13/16“	1.13/16“			STRAIGHT	
ZT562C	1/4“-28	9/32“	2.5/8“	3.7/16“	5.11/16“	¼“	7/8“	30° R.H.	1/8“
ZT563C			2.5/8“	3.7/16“	5.11/16“			30° L.H.	
ZT561C			3.3/64“	3.13/16	5.11/16“			STRAIGHT	
ZT762C			2.5/8“	3.7/16“	1.13/16“			30° R.H.	
ZT763C			2.5/8“	3.7/16“	1.13/16“			30° L.H.	

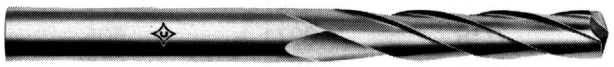

Fräsbohrer, konisch, 3-Schneiden
TAPER ROUTER, 3-FLUTES
TAPER 1/4 INCH PER FOOT

Artikel-Nr. PART NO.	**Schaftmaß** SHANK DIA.	**Durchmesser,klein** SMALL END	**Durchmesser,groß** LARGE END	**Schneidenlänge** FLUTE LENGTH	**Gesamtlänge** OVERALL LENGTH
4244-1	**.098** (2,49 mm)	**.081** (2,06 mm)	**.098** (2,49 mm)	**13/16"** (20,64 mm)	**2"** (50,8 mm)
4244-2	**.128** (3,25 mm)	**.110** (2,79 mm)	**.128** (3,25 mm)	**7/8"** (22,23 mm)	**2.1/4"** (57,2 mm)
4244-3	**.1875** (4,76 mm)	**.165** (4,19 mm)	**.1875** (4,76 mm)	**1.1/16"** (26,99 mm)	**2.1/2"** (63,5 mm)
4244-4	**.250** (6,35 mm)	**.224** (5,69 mm)	**.250** (6,35 mm)	**1.1/4"** (31,75 mm)	**2.3/4"** (69,9 mm)



Fräser mit 135° Bohrschneide für Fiberglas und ähnliche Kunststoffe
ROUTER WITH 135° DRILL POINT FOR
FIBRE GLASS & NON-METALLIC MATERIALS

Artikel-Nr. PART NO.	**Schaftmaß** SHANK DIA.	**Kopf-Durchmesser** HEAD DIAMETER	**Schneidenlänge** FLUTE LENGTH	**Gesamtlänge** OVERALL LENGTH
223-1/4"	**1/4"** (6,35 mm)	**1/4"** (6,35 mm)	**3/4"** (19,05 mm)	**2.1/2"** (63,5 mm)



Vollhartmetall-Bohrer mit Spezialanschliff für KEVLAR und Kohlefaser Verbundwerkstoffe
SOLID CARBIDE DRILL WITH SPECIAL GRINDING
FOR KEVLAR AND GRAPHITE COMPOSITES

Artikel-Nr. / PART NO.	**342-3/32"**	**342-1/8"**	**342-5/32"**	**342-3/16"**	**342-1/4"**
Durchmesser / DIAMETER	**3/32"** (2,38 mm)	**1/8"** (3,18 mm)	**5/32"** (3,97 mm)	**3/16"** (4,76 mm)	**1/4"** (6,35 mm)
Gesamtlänge / O/A LENGTH	**2"** (50,80 mm)	**2.1/4** (57,15 mm)	**2.1/2** (63,50 mm)	**2.3/4** (69,85 mm)	**3.1/4"** (82,55 mm)
Schneidenlänge / FLUTE LENGTH	**1"** (25,40 mm)	**1.1/4** (31,75 mm)	**1.3/8** (34,92 mm)	**1.5/8** (41,27 mm)	**2"** (50,80 mm)

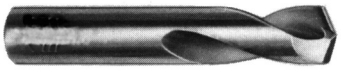

Schneidenwinkel 135°
SPLIT POINT 135°

Kobalt-Nietausbohrer
Gesamtlänge ca. 35 mm, Schneidenlänge ca. 14 mm
COBALT-RIVET-KNOCKOUT-DRILL
OVERALL LENGTH APPR. 1.3/8", FLUTE LENGTH APPR. 9/16"

Artikel-Nr. / PART NO.	**Durchmesser** / DIAMETER			**Artikel-Nr.** / PART NO.	**Durchmesser** / DIAMETER	
	MM	INCH			**MM**	INCH
HAUS94-2,00 MM-M42	**2,00**	.0787		**HAUS94-4,10 MM-M42**	**4,10**	.1614
HAUS94-2,40 MM-M42	**2,40**	.0945		**HAUS94-4,20 MM-M42**	**4,20**	.1654
HAUS94-2,50 MM-M42	**2,50**	.0984		**HAUS94-4,50 MM-M42**	**4,50**	.1772
HAUS94-3,00 MM-M42	**3,00**	.1181		**HAUS94-4,80 MM-M42**	**4,80**	.1890
HAUS94-3,20 MM-M42	**3,20**	.1260		**HAUS94-5,00 MM-M42**	**5,00**	.1969
HAUS94-3,26 MM-M42	**3,26**	.1283		**HAUS94-5,50 MM-M42**	**5,50**	.2165
HAUS94-3,50 MM-M42	**3,50**	.1378		**HAUS94-6,00 MM-M42**	**6,00**	.2362
HAUS94-4,00 MM-M42	**4,00**	.1575		**HAUS94-6,40 MM-M42**	**6,40**	.2520
HAUS94-4,09 MM-M42	**4,09**	.1610				

Andere Abmessungen auf Anfrage / OTHER DIMENSIONS ON REQUEST

DOUBLE MARGIN DRILLS - NAS 937

Jobber Length, Cobalt, 135° Split Point



Designed for close tolerance drilling in titanium, stainless, heat treated material and aluminum alloys. When the drill point penetrates enough for the second margin to contact the wall of the hole, the point is stabilized and true cylindrical geometry is established. Smooth accurate holes are produced and reaming can often be eliminated.

Part-No.	Drill Size	Drill Diameter	Flute Length	Overall Length	Part-No.	Drill Size	Drill Diameter	Flute Length	Overall Length
13-DM63	3/32"	.0938	1-1/4"	2-1/4"	**13-DM70A**	---	.1870	2-5/16"	3-1/2"
13-DM40	#40	.0980	1-3/8"	2-3/8"	**13-DM69**	3/16"	.1875	2-5/16"	3-1/2"
13-DM64	7/64"	.1094	1-1/2"	2-5/8"	**13-DM12**	#12	.1890	2-5/16"	3-1/2"
13-DM65	1/8"	.1250	1-5/8"	2-3/4"	**13-DM11**	#11	.1910	2-5/16"	3-1/2"
13-DM30	#30	.1285	1-5/8"	2-3/4"	**13-DM10**	#10	.1935	2-7/16"	3-5/8"
13-DM66	9/64"	.1406	1-3/4"	2-7/8"	**13-DM08**	#8	.1990	2-7/16"	3-5/8"
13-DM27	#27	.1440	1-7/8"	3"	**13-DM06**	#6	.2040	2-1/2"	3-3/4"
13-DM67	5/32"	.1562	2"	3-1/8"	**13-DM05**	#5	.2055	2-1/2"	3-3/4"
13-DM21	#21	.1590	2-1/8"	3-1/4"	**13-DM71**	7/32"	.2188	2-1/2"	3-3/4"
13-DM20	#20	.1610	2-1/8"	3-1/4"	**13-DM93**	D	.2460	2-3/4"	4"
13-DM19	#19	.1660	2-1/8"	3-1/4"	**13-DM73**	1/4"	.2500	2-3/4"	4"
13-DM68	11/64"	.1719	2-1/8"	3-1/4"	**13-DM95**	F	.2570	2-7/8"	4-1/8"
13-DM16	#16	.1770	2-3/16"	3-3/8"	**13-DM96**	G	.2610	2-7/8"	4-1/8"
13-DM15	#15	.1800	2-3/16"	3-3/8"	**13-DM77**	5/16"	.3125	3-3/16"	4-1/2"
13-DM13	#13	.1850	2-5/16"	3-1/2"	**13-DM81**	3/8"	.3750	3-5/8"	5"

PILOTED DOUBLE MARGIN DRILLS

Jobber Length, Cobalt, 135° Split Point



Designed for close tolerance drilling in titanium, stainless, heat treated material and aluminum alloys. When the drill point penetrates enough for the second margin to contact the wall of the hole, the point is stabilized and true cylindrical geometry is established. Smooth accurate holes are produced and reaming can often be eliminated.

Part-No.	Size	Drill Diameter	Pilot Diameter	Flute Length	Overall Length	Pilot Length
13-100	30 x 40	.1285	.0980	1-5/8"	2-3/4"	1/4"
13-106	27 x 40	.1440	.0980	1-7/8"	3"	1/4"
13-114	21 x 40	.1590	.0980	2-1/8"	3-1/4"	1/4"
13-107	21 x 30	.1590	.1285	2-1/8"	3-1/4"	1/4"
13-117	20 x 40	.1610	.0980	2-1/8"	3-1/4"	1/4"
13-115	20 x 30	.1610	.1285	2-1/8"	3-1/4"	1/4"
13-118	16 x 40	.1770	.0980	2-3/16"	3-3/8"	1/4"
13-119	16 x 30	.1770	.1285	2-3/16"	3-3/8"	1/4"
13-121	13 x 40	.1850	.0980	2-5/16"	3-1/2"	1/4"
13-128	13 x 30	.1850	.1285	2-5/16"	3-1/2"	1/4"
13-135	13 x 21	.1850	.1590	2-5/16"	3-1/2"	1/4"
13-142	12 x 40	.1890	.0980	2-5/16"	3-1/2"	1/4"
13-149	12 x 30	.1890	.1285	2-5/16"	3-1/2"	1/4"
13-156	12 x 21	.1890	.1590	2-5/16"	3-1/2"	1/4"
13-170	11 x 30	.1910	.1285	2-5/16"	3-1/2"	1/4"
13-163	11 x 21	.1910	.1590	2-5/16"	3-1/2"	1/4"
13-184	10 x 40	.1935	.0980	2-7/16"	3-5/8"	1/4"
13-177	10 x 30	.1935	.1285	2-7/16"	3-5/8"	1/4"
13-191	10 x 21	.1935	.1590	2-7/16"	3-5/8"	1/4"
13-205	D x 13	.2460	.1850	2-3/4"	4"	5/16"
13-198	D x 3/16	.2460	.1875	2-3/4"	4"	5/16"
13-230	1/4 x 30	.2500	.1285	2-3/4"	4"	5/16"
13-327	1/4 x 21	.2500	.1590	2-3/4"	4"	5/16"
13-223	1/4 x 11	.2500	.1910	2-3/4"	4"	5/16"
13-216	1/4 x 10	.2500	.1935	2-3/4"	4"	5/16"
13-244	5/16 x 1/4	.3125	.2500	3-3/16"	4-1/2"	5/16"
13-250	3/8 x 1/4	.3750	.2500	3-5/8"	5"	3/8"
13-255	3/8 x 5/16	.3750	.3125	3-5/8"	5"	3/8"

Andere Abmessungen auf Anfrage / **OTHER DIMENSIONS ON REQUEST**

HSS - Maschinenreibahlen mit Führung
HSS - PILOTED CHUCKING REAMERS

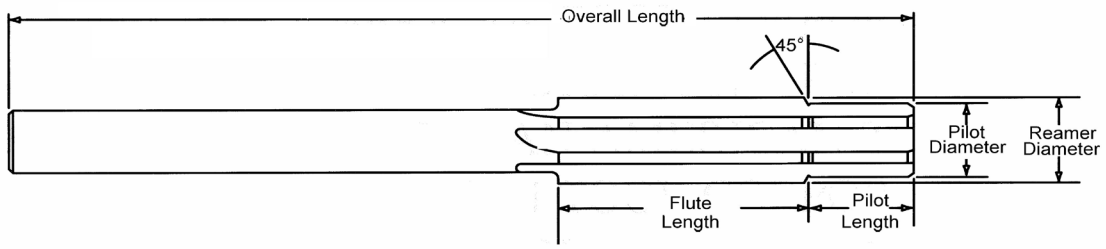

Part Number	Reamer Diameter / INCH	Pilot Diameter / INCH	Flutes		Pilot Length	Overall Length
			No.	Length		
31-219	.1610	.1250	6	13/16"	5/16"	4-1/2"
33-737	.1850	.1600	6	13/16"	5/16"	4-1/2"
31-602	.1860	.1540	6	13/16"	5/16"	4-1/2"
33-090	.1870	.1600	6	13/16"	5/16"	4-1/2"
44-100	.1870	.1740	6	13/16"	5/16"	4-1/2"
44-410	.1875	.1600	6	13/16"	5/16"	4-1/2"
99-200	.1985	.1845	6	15/16"	5/16"	5"
31-604	.1985	.1850	6	15/16"	5/16"	5"
33-738	.1985	.1945	6	15/16"	5/16"	5"
44-150	.2000	.1870	6	15/16"	5/16"	5"
44-160	.2031	.1875	6	15/16"	5/16"	5"
33-739	.2130	.1950	6	15/16"	5/16"	5"
99-300	.2130	.1985	6	15/16"	5/16"	5"
31-207	.2140	.1970	6	15/16"	5/16"	5"
44-200	.2158	.2000	6	15/16"	5/16"	5"
33-290	.2160	.1980	6	15/16"	5/16"	5"
44-210	.2188	.2031	6	15/16"	5/16"	5"
44-250	.2314	.2158	6	1-1/8"	3/8"	6"
31-605	.2330	.2140	6	1-1/8"	3/8"	6"
33-740	.2340	.2130	6	1-3/16"	5/16"	6"
44-260	.2344	.2180	6	1-1/8"	3/8"	6"
99-500	.2435	.2340	6	1-1/8"	3/8"	6"
33-741	.2455	.2340	6	1-3/16"	5/16"	6"
31-222	.2460	.2330	6	1-1/8"	3/8"	6"
44-300	.2470	.2314	6	1-1/8"	3/8"	6"
44-310	.2500	.2344	6	1-1/8"	3/8"	6"
33-742	.2600	.2460	6	1-1/8"	3/8"	6"
33-340	.2610	.2310	6	1-1/8"	3/8"	6"
31-600	.2610	.2450	6	1-1/8"	3/8"	6"
31-221	.2620	.2470	6	1-1/8"	3/8"	6"
44-350	.2621	.2470	6	1-1/8"	3/8"	6"
44-360	.2656	.2500	6	1-1/8"	3/8"	6"
33-743	.2755	.2600	6	1-1/8"	3/8"	6"
30-378	.2780	.2620	6	1-1/8"	3/8"	6"
44-400	.2782	.2621	6	1-1/8"	3/8"	6"
30-368	.2810	.2670	6	1-1/8"	3/8"	6"
44-320	.2812	.2656	6	1-1/8"	3/8"	6"
99-701	.2910	.2755	6	1-1/8"	3/8"	6"
31-601	.2920	.2770	6	1-1/8"	3/8"	6"
44-450	.2939	.2782	6	1-1/8"	3/8"	6"
44-460	.2969	.2812	6	1-1/8"	3/8"	6"
99-702	.3075	.2910	6	1-1/8"	3/8"	6"
44-500	.3090	.2939	6	1-1/8"	3/8"	6"
31-216	.3100	.2920	6	1-3/16"	5/16"	6"

Andere Abmessungen auf Anfrage / OTHER DIMENSIONS ON REQUEST

HSS - Maschinenreibahlen mit Führung
HSS - PILOTED CHUCKING REAMERS

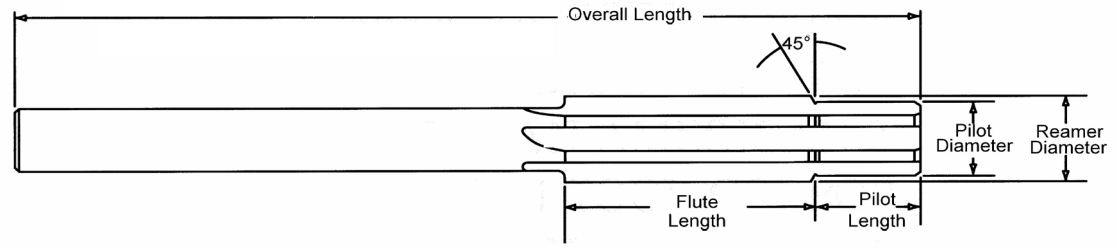

Part Number	Reamer Diameter / INCH	Pilot Diameter / INCH	Flutes		Pilot Length	Overall Length
			No.	Length		
44-510	.3125	.2969	6	1-1/8"	3/8"	6"
99-703	.3225	.3075	6	1-1/8"	3/8"	6"
31-217	.3230	.3100	6	1-1/8"	3/8"	6"
44-550	.3251	.3090	6	1-1/8"	3/8"	6"
44-560	.3281	.3125	6	1-1/8"	3/8"	6"
99-704	.3380	.3225	6	1-1/8"	3/8"	6"
30-394	.3390	.3230	6	1-1/8"	3/8"	6"
31-218	.3390	.3350	6	1-3/16"	5/16"	6"
44-600	.3407	.3251	6	1-1/8"	3/8"	6"
44-610	.3438	.3281	6	1"	1/2"	6"
99-705	.3535	.3380	6	1-1/4"	1/2"	7"
44-620	.3594	.3438	6	1-1/4"	1/2"	7"
99-706	.3700	.3535	6	1-1/4"	1/2"	7"
30-409	.3710	.3550	6	1-1/4"	1/2"	7"
33-630	.3750	.3494	6	1-1/4"	1/2"	7"
44-630	.3750	.3594	6	1-1/4"	1/2"	7"
99-707	.3850	.3700	6	1-1/4"	1/2"	7"
34-116	.3860	.3720	6	1-1/4"	1/2"	7"
44-640	.3906	.3750	6	1-1/4"	1/2"	7"
99-708	.4005	.3850	6	1-1/4"	1/2"	7"
31-603	.4010	.3860	6	1-1/4"	1/2"	7"
44-650	.4062	.3906	6	1-1/4"	1/2"	7"
99-709	.4160	.4005	6	1-1/4"	1/2"	7"
44-660	.4219	.4062	6	1-1/4"	1/2"	7"
99-710	.4325	.4160	6	1-1/4"	1/2"	7"
99-719	.4375	.4219	6	1-1/4"	1/2"	7"
99-711	.4485	.4325	6	1-1/4"	1/2"	7"
99-720	.4531	.4375	6	1-1/4"	1/2"	7"
99-712	.4640	.4405	6	1-1/4"	1/2"	7"
99-721	.4688	.4531	6	1-1/4"	1/2"	7"
99-713	.4795	.4640	6	1-1/2"	1/2"	8"
99-722	.4844	.4688	6	1-1/2"	1/2"	8"
99-714	.4950	.4795	6	1-1/2"	1/2"	8"
99-723	.5000	.4844	6	1-1/2"	1/2"	8"
99-715	.5110	.4950	6	1-1/2"	1/2"	8"
99-724	.5156	.5000	6	1-1/2"	1/2"	8"
99-716	.5265	.5110	6	1-1/2"	1/2"	8"
99-725	.5312	.5156	6	1-1/2"	1/2"	8"
99-726	.5469	.5312	8	1-1/2"	1/2"	8"
99-727	.5625	.5469	8	1-1/2"	1/2"	8"
99-728	.5781	.5625	8	1-1/2"	1/2"	8"
99-729	.5938	.5781	8	1-1/2"	1/2"	8"
99-730	.6094	.5938	8	1-1/2"	1/2"	9"
99-731	.6250	.6094	8	1-3/4"	1/2"	9"

Andere Abmessungen auf Anfrage / OTHER DIMENSIONS ON REQUEST

COBALT AIRCRAFT DRILLS

- WIRE GAUGE NUMBER SIZES -

NAS907, Type J Cobalt Jobber Length Drill Cobalt HSS Surface Treated, 135° Split Point



PART NUMBER	DIAMETER NUMBER	DECIMAL EQUIVALENT INCHES	MILLIMETER EQUIVALENT	FLUTE LENGTH INCHES	OVERALL LENGTH INCHES
01-001	**1**	.2280	5.79 mm	2-5/8	3-7/8
01-002	**2**	.2210	5.61 mm	2-5/8	3-7/8
01-003	**3**	.2130	5.41 mm	2-1/2	3-3/4
01-004	**4**	.2090	5.31 mm	2-1/2	3-3/4
01-005	**5**	.2055	5.22 mm	2-1/2	3-3/4
01-006	**6**	.2040	5.18 mm	2-1/2	3-3/4
01-007	**7**	.2010	5.11 mm	2-7/16	3-5/8
01-008	**8**	.1990	5.06 mm	2-7/16	3-5/8
01-009	**9**	.1960	4.98 mm	2-7/16	3-5/8
01-010	**10**	.1935	4.92 mm	2-7/16	3-5/8
01-011	**11**	.1910	4.85 mm	2-5/16	3-1/2
01-012	**12**	.1890	4.80 mm	2-5/16	3-1/2
01-013	**13**	.1850	4.70 mm	2-5/16	3-1/2
01-014	**14**	.1820	4.62 mm	2-3/16	3-3/8
01-015	**15**	.1800	4.57 mm	2-3/16	3-3/8
01-016	**16**	.1770	4.50 mm	2-3/16	3-3/8
01-017	**17**	.1730	4.39 mm	2-3/16	3-3/8
01-018	**18**	.1695	4.30 mm	2-1/8	3-1/4
01-019	**19**	.1660	4.22 mm	2-1/8	3-1/4
01-020	**20**	.1610	4.09 mm	2-1/8	3-1/4
01-021	**21**	.1590	4.04 mm	2-1/8	3-1/4
01-022	**22**	.1570	3.99 mm	2	3-1/8
01-023	**23**	.1540	3.91 mm	2	3-1/8
01-024	**24**	.1520	3.86 mm	2	3-1/8
01-025	**25**	.1495	3.80 mm	1-7/8	3
01-026	**26**	.1470	3.73 mm	1-7/8	3
01-027	**27**	.1440	3.66 mm	1-7/8	3
01-028	**28**	.1405	3.57 mm	1-3/4	2-7/8
01-029	**29**	.1360	3.45 mm	1-3/4	2-7/8
01-030	**30**	.1285	3.27 mm	1-5/8	2-3/4
01-031	**31**	.1200	3.05 mm	1-5/8	2-3/4
01-032	**32**	.1160	2.95 mm	1-5/8	2-3/4
01-033	**33**	.1130	2.87 mm	1-1/2	2-5/8
01-034	**34**	.1110	2.82 mm	1-1/2	2-5/8
01-035	**35**	.1100	2.79 mm	1-1/2	2-5/8
01-036	**36**	.1065	2.71 mm	1-7/16	2-1/2
01-037	**37**	.1040	2.64 mm	1-7/16	2-1/2
01-038	**38**	.1015	2.58 mm	1-7/16	2-1/2
01-039	**39**	.0995	2.53 mm	1-3/8	2-3/8
01-040	**40**	.0980	2.49 mm	1-3/8	2-3/8

COBALT AIRCRAFT DRILLS

- WIRE GAUGE NUMBER SIZES -

NAS907, Type J Cobalt Jobber Length Drill Cobalt HSS Surface Treated, 135° Split Point



PART NUMBER	DIAMETER NUMBER	DECIMAL EQUIVALENT INCHES	MILLIMETER EQUIVALENT	FLUTE LENGTH INCHES	OVERALL LENGTH INCHES
01-041	**41**	.0960	2.44 mm	1-3/8	2-3/8
01-042	**42**	.0935	2.37 mm	1-1/4	2-1/4
01-043	**43**	.0890	2.26 mm	1-1/4	2-1/4
01-044	**44**	.0860	2.18 mm	1-1/8	2-1/8
01-045	**45**	.0820	2.08 mm	1-1/8	2-1/8
01-046	**46**	.0810	2.06 mm	1-1/8	2-1/8
01-047	**47**	.0785	1.99 mm	1	2
01-048	**48**	.0760	1.93 mm	1	2
01-049	**49**	.0730	1.85 mm	1	2
01-050	**50**	.0700	1.78 mm	1	2
01-051	**51**	.0670	1.70 mm	1	2
01-052	**52**	.0635	1.61 mm	7/8	1-7/8
01-053	**53**	.0595	1.51 mm	7/8	1-7/8
01-054	**54**	.0550	1.40 mm	7/8	1-7/8
01-055	**55**	.0520	1.32 mm	7/8	1-7/8
01-056	**56**	.0465	1.18 mm	3/4	1-3/4
01-057	**57**	.0430	1.09 mm	3/4	1-3/4
01-058	**58**	.0420	1.07 mm	11/16	1-5/8
01-059	**59**	.0410	1.04 mm	11/16	1-5/8
01-060	**60**	.0400	1.02 mm	11/16	1-5/8
01-061	**61 ***	.0390	0.99 mm	11/16	1-5/8
01-062	**62 ***	.0380	0.97 mm	5/8	1-1/2
01-063	**63 ***	.0370	0.94 mm	5/8	1-1/2
01-064	**64 ***	.0360	0.91 mm	5/8	1-1/2
01-065	**65 ***	.0350	0.89 mm	5/8	1-1/2
01-066	**66 ***	.0330	0.84 mm	1/2	1-3/8
01-067	**67 ***	.0320	0.81 mm	1/2	1-3/8
01-068	**68 ***	.0310	0.79 mm	1/2	1-3/8
01-069	**69 ***	.0292	0.74 mm	1/2	1-3/8
01-070	**70 ***	.0280	0.71 mm	3/8	1-1/4
01-071	**71 ***	.0260	0.66 mm	3/8	1-1/4
01-072	**72 ***	.0250	0.64 mm	5/16	1-1/8
01-073	**73 ***	.0240	0.61 mm	5/16	1-1/8
01-074	**74 ***	.0225	0.57 mm	1/4	1
01-075	**75 ***	.0210	0.53 mm	1/4	1
01-076	**76 ***	.0200	0.51 mm	3/16	7/8
01-077	**77 ***	.0180	0.46 mm	3/16	7/8
01-078	**78 ***	.0160	0.41 mm	3/16	7/8
01-079	**79 ***	.0145	0.37 mm	1/8	3/4
01-080	**80 ***	.0135	0.34 mm	1/8	3/4

*** NON SPLIT POINT**

COBALT AIRCRAFT DRILLS

- FRACTIONAL SIZES -

NAS907, Type J Cobalt Jobber Length Drill Cobalt HSS Surface Treated, 135° Split Point



PART NUMBER	DIAMETER INCHES	DECIMAL EQUIVALENT INCHES	MILLIMETER EQUIVALENT	FLUTE LENGTH INCHES	OVERALL LENGTH INCHES
02-060	**1/64 ***	.0156	0.40 mm	3/16	3/4
02-058	**1/32 ***	.0312	0.79 mm	1/2	1-3/8
02-059	**3/64 ***	.0469	1.19 mm	3/4	1-3/4
02-061	**1/16**	.0625	1.59 mm	7/8	1-7/8
02-062	**5/64**	.0781	1.98 mm	1	2
02-063	**3/32**	.0938	2.38 mm	1-1/4	2-1/4
02-064	**7/64**	.1094	2.78 mm	1-1/2	2-5/8
02-065	**1/8**	.1250	3.18 mm	1-5/8	2-3/4
02-066	**9/64**	.1406	3.57 mm	1-3/4	2-7/8
02-067	**5/32**	.1562	3.97 mm	2	3-1/8
02-068	**11/64**	.1719	4.37 mm	2-1/8	3-1/4
02-069	**3/16**	.1875	4.76 mm	2-5/16	3-1/2
02-070	**13/64**	.2031	5.16 mm	2-7/16	3-5/8
02-071	**7/32**	.2188	5.56 mm	2-1/2	3-3/4
02-072	**15/64**	.2344	5.95 mm	2-5/8	3-7/8
02-073	**1/4**	.2500	6.35 mm	2-3/4	4
02-074	**17/64**	.2656	6.75 mm	2-7/8	4-1/8
02-075	**9/32**	.2812	7.14 mm	2-15/16	4-1/4
02-076	**19/64**	.2969	7.54 mm	3-1/16	4-3/8
02-077	**5/16**	.3125	7.94 mm	3-3/16	4-1/2
02-078	**21/64**	.3281	8.33 mm	3-5/16	4-5/8
02-079	**11/32**	.3438	8.73 mm	3-7/16	4-3/4
02-080	**23/64**	.3594	9.13 mm	3-1/2	4-7/8
02-081	**3/8**	.3750	9.53 mm	3-5/8	5
02-082	**25/64**	.3906	9.92 mm	3-3/4	5-1/8
02-083	**13/32**	.4062	10.32 mm	3-7/8	5-1/4
02-084	**27/64**	.4219	10.72 mm	3-15/16	5-3/8
02-085	**7/16**	.4375	11.11 mm	4-1/16	5-1/2
02-086	**29/64**	.4531	11.51 mm	4-3/16	5-5/8
02-087	**15/32**	.4688	11.91 mm	4-5/16	5-3/4
02-088	**31/64**	.4844	12.30 mm	4-3/8	5-7/8
02-089	**1/2**	.5000	12.70 mm	4-1/2	6

*** NON SPLIT POINT**

COBALT AIRCRAFT DRILLS

- LETTER SIZES -

NAS907, Type J Cobalt Jobber Length Drill Cobalt HSS Surface Treated, 135° Split Point



PART NUMBER	DIAMETER SIZE	DECIMAL EQUIVALENT INCHES	MILLIMETER EQUIVALENT	FLUTE LENGTH INCHES	OVERALL LENGTH INCHES
03-090	**A**	.234	5.94 mm	2-5/8	3-7/8
03-091	**B**	.238	6.05 mm	2-3/4	4
03-092	**C**	.242	6.15 mm	2-3/4	4
03-093	**D**	.246	6.25 mm	2-3/4	4
03-094	**E**	.250	6.35 mm	2-3/4	4
03-095	**F**	.257	6.53 mm	2-7/8	4-1/8
03-096	**G**	.261	6.63 mm	2-7/8	4-1/8
03-097	**H**	.266	6.76 mm	2-7/8	4-1/8
03-098	**I**	.272	6.91 mm	2-7/8	4-1/8
03-099	**J**	.277	7.04 mm	2-7/8	4-1/8
03-100	**K**	.281	7.14 mm	2-15/16	4-1/4
03-101	**L**	.290	7.37 mm	2-15/16	4-1/4
03-102	**M**	.295	7.49 mm	3-1/16	4-3/8
03-103	**N**	.302	7.67 mm	3-1/16	4-3/8
03-104	**O**	.316	8.03 mm	3-3/16	4-1/2
03-105	**P**	.323	8.20 mm	3-5/16	4-5/8
03-106	**Q**	.332	8.43 mm	3-7/16	4-3/4
03-107	**R**	.339	8.61 mm	3-7/16	4-3/4
03-108	**S**	.348	8.84 mm	3-1/2	4-7/8
03-109	**T**	.358	9.09 mm	3-1/2	4-7/8
03-110	**U**	.368	9.35 mm	3-5/8	5
03-111	**V**	.377	9.58 mm	3-5/8	5
03-112	**W**	.386	9.80 mm	3-3/4	5-1/8
03-113	**X**	.395	10.03 mm	3-3/4	5-1/8
03-114	**Y**	.404	10.26 mm	3-7/8	5-1/4
03-115	**Z**	.413	10.49 mm	3-7/8	5-1/4

COBALT AIRCRAFT EXTENSION DRILLS

- WIRE SIZES / 6” OVERALL LENGTH -

NAS907, Type J Cobalt Extension Length Drill Cobalt HSS Surface Treated, 135° Split Point



PART NUMBER	DIAMETER NUMBER	DECIMAL EQUIVALENT INCHES	MILLIMETER EQUIVALENT	FLUTE LENGTH INCHES	OVERALL LENGTH INCHES
05-200	**1**	.2280	5.79 mm	2-5/8	6”
05-201	**2**	.2210	5.61 mm	2-5/8	6”
05-202	**3**	.2130	5.41 mm	2-1/2	6”
05-203	**4**	.2090	5.31 mm	2-1/2	6”
05-204	**5**	.2055	5.22 mm	2-1/2	6”
05-205	**6**	.2040	5.18 mm	2-1/2	6”
05-206	**7**	.2010	5.11 mm	2-7/16	6”
05-207	**8**	.1990	5.05 mm	2-7/16	6”
05-208	**9**	.1960	4.98 mm	2-7/16	6”
05-209	**10**	.1935	4.91 mm	2-7/16	6”
05-210	**11**	.1910	4.85 mm	2-5/16	6”
05-211	**12**	.1890	4.80 mm	2-5/16	6”
05-212	**13**	.1850	4.70 mm	2-5/16	6”
05-213	**14**	.1820	4.62 mm	2-3/16	6”
05-214	**15**	.1800	4.57 mm	2-3/16	6”
05-215	**16**	.1770	4.50 mm	2-3/16	6”
05-216	**17**	.1730	4.39 mm	2-3/16	6”
05-217	**18**	.1695	4.31 mm	2-1/8	6”
05-218	**19**	.1660	4.22 mm	2-1/8	6”
05-219	**20**	.1610	4.09 mm	2-1/8	6”
05-220	**21**	.1590	4.04 mm	2-1/8	6”
05-221	**22**	.1570	3.99 mm	2	6”
05-222	**23**	.1540	3.91 mm	2	6”
05-223	**24**	.1520	3.86 mm	2	6”
05-224	**25**	.1495	3.80 mm	1-7/8	6”
05-225	**26**	.1470	3.73 mm	1-7/8	6”
05-226	**27**	.1440	3.66 mm	1-7/8	6”
05-227	**28**	.1405	3.57 mm	1-3/4	6”
05-228	**29**	.1360	3.45 mm	1-3/4	6”
05-229	**30**	.1285	3.26 mm	1-5/8	6”
05-230	**31**	.1200	3.05 mm	1-5/8	6”
05-231	**32**	.1160	2.95 mm	1-5/8	6”
05-232	**33**	.1130	2.87 mm	1-1/2	6”
05-233	**34**	.1110	2.82 mm	1-1/2	6”
05-234	**35**	.1100	2.79 mm	1-1/2	6”
05-235	**36**	.1065	2.71 mm	1-7/16	6”
05-236	**37**	.1040	2.64 mm	1-7/16	6”
05-239	**40**	.0980	2.49 mm	1-3/8	6”
05-240	**41**	.0960	2.44 mm	1-3/8	6”
05-249	**50**	.0700	1.78 mm	1	6”

COBALT AIRCRAFT EXTENSION DRILLS

- FRACTIONAL SIZES / 6" OVERALL LENGTH -

NAS907, Type J Cobalt Extension Length Drill Cobalt HSS Surface Treated, 135° Split Point



PART NUMBER	DIAMETER INCHES	DECIMAL EQUIVALENT INCHES	MILLIMETER EQUIVALENT	FLUTE LENGTH INCHES	OVERALL LENGTH INCHES
04-100	**1/16**	.0625	1.59 mm	7/8	6"
04-101	**5/64**	.0781	1.98 mm	1	6"
04-102	**3/32**	.0938	2.38 mm	1-1/4	6"
04-103	**7/64**	.1094	2.78 mm	1-1/2	6"
04-104	**1/8**	.1250	3.18 mm	1-5/8	6"
04-105	**9/64**	.1406	3.57 mm	1-3/4	6"
04-106	**5/32**	.1562	3.97 mm	2	6"
04-107	**11/64**	.1719	4.37 mm	2-1/8	6"
04-108	**3/16**	.1875	4.76 mm	2-5/16	6"
04-109	**13/64**	.2031	5.16 mm	2-7/16	6"
04-110	**7/32**	.2188	5.56 mm	2-1/2	6"
04-111	**15/64**	.2344	5.95 mm	2-5/8	6"
04-112	**1/4**	.2500	6.35 mm	2-3/4	6"
04-125	**17/64**	.2656	6.75 mm	2-7/8	6"
04-114	**9/32**	.2812	7.14 mm	2-15/16	6"
04-116	**19/64**	.2969	7.54 mm	3-1/16	6"
04-115	**5/16**	.3125	7.94 mm	3-3/16	6"
04-121	**21/64**	.3281	8.33 mm	3-5/16	6"
04-120	**11/32**	.3438	8.73 mm	3-7/16	6"
04-124	**23/64**	.3594	9.13 mm	3-1/2	6"
04-113	**3/8**	.3750	9.53 mm	3-5/8	6"
04-118	**25/64**	.3906	9.92 mm	3-3/4	6"
04-119	**13/32**	.4062	10.32 mm	3-7/8	6"
04-126	**27/64**	.4219	10.72 mm	3-15/16	6"
04-117	**7/16**	.4375	11.11 mm	3-1/16	6"

COBALT AIRCRAFT EXTENSION DRILLS

- LETTER SIZES / 6" OVERALL LENGTH -

NAS907, Type J Cobalt Extension Length Drill Cobalt HSS Surface Treated, 135° Split Point



PART NUMBER	DIAMETER SIZE	DECIMAL EQUIVALENT INCHES	MILLIMETER EQUIVALENT	FLUTE LENGTH INCHES	OVERALL LENGTH INCHES
06-408	**C**	.2420	6.15 mm	2-3/4	6"
06-403	**D**	.2460	6.25 mm	2-3/4	6"
06-402	**F**	.2570	6.53 mm	2-7/8	6"
06-401	**G**	.2610	6.63 mm	2-7/8	6"
06-412	**H**	.2660	6.76 mm	2-7/8	6"
06-404	**J**	.2770	7.04 mm	2-7/8	6"
06-405	**K**	.2810	7.14 mm	2-15/16	6"
06-409	**M**	.2950	7.49 mm	3-1/16	6"
06-410	**N**	.3020	7.67 mm	3-1/16	6"
06-411	**O**	.3160	8.03 mm	3-1/16	6"
06-406	**Q**	.3320	8.43 mm	3-7/16	6"
06-407	**U**	.3680	9.35 mm	3-5/8	6"

COBALT AIRCRAFT EXTENSION DRILLS

- WIRE SIZES / 12” OVERALL LENGTH -

NAS907, Type J Cobalt Extension Length Drill Cobalt HSS
Surface Treated, 135° Split Point



PART NUMBER	DIAMTER NUMBER	DECIMAL EQUIVALENT INCHES	MILLIMETER EQUIVALENT	FLUTE LENGTH INCHES	OVERALL LENGTH INCHES
07-401	**1**	.2280	5.79 mm	2-5/8	12”
07-402	**2**	.2210	5.61 mm	2-5/8	12”
07-403	**3**	.2130	5.41 mm	2-1/2	12”
07-404	**4**	.2090	5.31 mm	2-1/2	12”
07-405	**5**	.2055	5.22 mm	2-1/2	12”
07-406	**6**	.2040	5.18 mm	2-1/2	12”
07-407	**7**	.2010	5.11 mm	2-7/16	12”
07-408	**8**	.1990	5.05 mm	2-7/16	12”
07-409	**9**	.1960	4.98 mm	2-7/16	12”
07-410	**10**	.1935	4.91 mm	2-7/16	12”
07-411	**11**	.1910	4.85 mm	2-5/16	12”
07-412	**12**	.1890	4.80 mm	2-5/16	12”
07-413	**13**	.1850	4.70 mm	2-5/16	12”
07-414	**14**	.1820	4.62 mm	2-5/16	12”
07-415	**15**	.1800	4.57 mm	2-3/16	12”
07-416	**16**	.1770	4.50 mm	2-3/16	12”
07-417	**17**	.1730	4.39 mm	2-3/16	12”
07-418	**18**	.1695	4.31 mm	2-1/8	12”
07-419	**19**	.1660	4.22 mm	2-1/8	12”
07-420	**20**	.1610	4.09 mm	2-1/8	12”
07-421	**21**	.1590	4.04 mm	2-1/8	12”
07-422	**22**	.1570	3.99 mm	2	12”
07-423	**23**	.1540	3.91 mm	2	12”
07-424	**24**	.1520	3.86 mm	2	12”
07-425	**25**	.1495	3.80 mm	1-7/8	12”
07-426	**26**	.1470	3.73 mm	1-7/8	12”
07-427	**27**	.1440	3.66 mm	1-7/8	12”
07-428	**28**	.1405	3.57 mm	1-3/4	12”
04-429	**29**	.1360	3.45 mm	1-3/4	12”
07-430	**30**	.1285	3.26 mm	1-5/8	12”
07-431	**31**	.1200	3.05 mm	1-5/8	12”
07-432	**32**	.1160	2.95 mm	1-5/8	12”
07-433	**33**	.1130	2.87 mm	1-1/2	12”
07-434	**34**	.1110	2.82 mm	1-1/2	12”
07-435	**35**	.1100	2.79 mm	1-1/2	12”
07-436	**36**	.1065	2.71 mm	1-7/16	12”
07-437	**37**	.1040	2.64 mm	1-7/16	12”
07-438	**38**	.1015	2.58 mm	1-7/16	12”
07-439	**39**	.0995	2.53 mm	1-3/8	12”
07-440	**40**	.0980	2.49 mm	1-3/8	12”
07-441	**41**	.0960	2.44 mm	1-3/8	12”
07-450	**50**	.0700	1.78 mm	1	12”

COBALT AIRCRAFT EXTENSION DRILLS

- FRACTIONAL SIZES / 12” OVERALL LENGTH -

NAS907, Type J Cobalt Extension Length Drill Cobalt HSS
Surface Treated, 135° Split Point



PART NUMBER	DIAMETER INCHES	DECIMAL EQUIVALENT INCHES	MILLIMETER EQUIVALENT	FLUTE LENGTH INCHES	OVERALL LENGTH INCHES
06-300	**1/16**	.0625	1.59 mm	7/8	12”
06-301	**5/64**	.0781	1.98 mm	1	12”
06-302	**3/32**	.0938	2.38 mm	1-1/4	12”
06-303	**7/64**	.1094	2.78 mm	1-1/2	12”
06-304	**1/8**	.1250	3.18 mm	1-5/8	12”
06-305	**9/64**	.1406	3.57 mm	1-3/4	12”
06-306	**5/32**	.1562	3.97 mm	2	12”
06-307	**11/64**	.1719	4.37 mm	2-1/8	12”
06-308	**3/16**	.1875	4.76 mm	2-5/16	12”
06-309	**13/64**	.2031	5.16 mm	2-7/16	12”
06-310	**7/32**	.2188	5.56 mm	2-1/2	12”
06-311	**15/64**	.2344	5.95 mm	2-5/8	12”
06-312	**1/4**	.2500	6.35 mm	2-3/4	12”
06-316	**9/32**	.2812	7.14 mm	2-15/16	12”
06-317	**19/64**	.2969	7.54 mm	3-1/16	12”
06-313	**5/16**	.3125	7.94 mm	3-1/16	12”
06-326	**21/64**	.3281	8.33 mm	3-5/16	12”
06-321	**11/32**	.3438	8.73 mm	3-7/16	12”
06-322	**23/64**	.3594	9.13 mm	3-1/2	12”
06-314	**3/8**	.3750	9.53 mm	3-5/8	12”
06-327	**25/64**	.3906	9.92 mm	3-3/4	12”
06-320	**13/32**	.4062	10.32 mm	3-7/8	12”
06-324	**27/64**	.4219	10.72 mm	3-15/16	12”
06-318	**7/16**	.4375	11.11 mm	3-1/16	12”
06-328	**29/64**	.4531	11.51 mm	4-3/16	12”
06-315	**15/32**	.4688	11.91 mm	4-5/16	12”
06-329	**31/64**	.4844	12.30 mm	4-3/8	12”
06-319	**1/2**	.5000	12.70 mm	4-1/2	12”

THREADED SHANK ADAPTER DRILLS

COBALT - NAS965D
1/4-28 Thread
- WIRE SIZES -







SIZE	DECIMAL EQUIVALENT INCES	MILLIMETER EQUIVALENT	SHORT SERIES LENGTH	PART NUMBER	LONG SERIES LENGTH	PART NUMBER	STUBBY SERIES LENGTH	PART NUMBER
1	.2280	5.79 mm	1-1/4	10-001	2-1/8	10-201	5/8	10-301
2	.2210	5.61 mm	1-1/4	10-002	2-1/8	10-202	5/8	10-302
3	.2130	.5.41 mm	1-1/4	10-003	2-1/8	10-203	5/8	10-303
4	.2090	5.31 mm	1-1/4	10-004	2-1/8	10-204	5/8	10-304
5	.2055	5.22 mm	1-1/4	10-005	2-1/8	10-205	5/8	10-305
6	.2040	5.18 mm	1-1/4	10-006	2-1/8	10-206	5/8	10-306
7	.2010	5.11 mm	1-1/4	10-007	2-1/8	10-207	5/8	10-307
8	.1990	5.06 mm	1-1/4	10-008	2-1/8	10-208	5/8	10-308
9	.1960	4.98 mm	1-1/4	10-009	2-1/8	10-209	9/16	10-309
10	.1935	4.92 mm	1-1/4	10-010	2-1/8	10-210	9/16	10-310
11	.1910	4.85 mm	1-1/4	10-011	2-1/8	10-211	9/16	10-311
12	.1890	4.80 mm	1-1/4	10-012	2-1/8	10-212	9/16	10-312
13	.1850	4.70 mm	1-1/4	10-013	2-1/8	10-213	9/16	10-313
14	.1820	4.62 mm	1-1/4	10-014	2-1/8	10-214	9/16	10-314
15	.1800	4.57 mm	1-1/4	10-015	2-1/8	10-215	9/16	10-315
16	.1170	4.50 mm	1-1/4	10-016	2-1/8	10-216	9/16	10-316
17	.1730	4.39 mm	1-1/4	10-017	2-1/8	10-217	9/16	10-317
18	.1695	4.30 mm	1-1/4	10-018	2-1/8	10-218	9/16	10-318
19	.1660	4.22 mm	1-1/4	10-019	2-1/8	10-219	9/16	10-319
20	.1610	4.09 mm	1-1/4	10-020	2-1/8	10-220	9/16	10-320
21	.1590	4.04 mm	1-1/4	10-021	2-1/8	10-221	9/16	10-321
22	.1570	3.99 mm	1-1/4	10-022	2-1/8	10-222	9/16	10-322
23	.1540	3.91 mm	1-1/4	10-023	2-1/8	10-223	9/16	10-323
24	.1520	3.86 mm	1-1/4	10-024	2-1/8	10-224	9/16	10-324
25	.1495	3.80 mm	1-1/4	10-025	2-1/8	10-225	9/16	10-325
26	.1470	3.73 mm	1-1/4	10-026	2-1/8	10-226	9/16	10-326
27	.1440	3.66 mm	1-1/4	10-027	2-1/8	10-227	9/16	10-327
28	.1405	3.57 mm	1-1/4	10-028	2-1/8	10-228	9/16	10-328
29	.1360	3.45 mm	1-1/4	10-029	2-1/8	10-229	9/16	10-329
30	.1285	3.27 mm	1-1/4	10-030	2-1/8	10-230	9/16	10-330
31	.1200	3.05 mm	1-1/4	10-031	2-1/8	10-231	9/16	10-331
32	.1160	2.95 mm	1-1/4	10-032	2-1/8	10-232	9/16	10-332
33	.1130	2.87 mm	1-1/4	10-033	2-1/8	10-233	9/16	10-333
34	.1110	2.82 mm	1-1/4	10-034	2-1/8	10-234	9/16	10-334
35	.1100	2.79 mm	1-1/4	10-035	2-1/8	10-235	1/2	10-335
36	.1065	2.71 mm	1-1/4	10-036	2-1/8	10-236	1/2	10-336
37	.1040	2.64 mm	1-1/4	10-037	2-1/8	10-237	1/2	10-337
38	.1015	2.58 mm	1-1/4	10-038	2-1/8	10-238	1/2	10-338
39	.0995	2.53 mm	1-1/4	10-039	2-1/8	10-239	1/2	10-339
40	.0980	2.49 mm	1	10-040	2-1/8	10-240	1/2	10-340
41	.0960	2.44 mm	1	10-041	2-1/8	10-241	1/2	10-341
42	.0935	2.37 mm	1	10-042	2-1/8	10-242	1/2	10-342
43	.0890	2.26 mm	1	10-043	2-1/8	10-243	1/2	10-343
44	.0860	2.18 mm	1	10-044	2-1/8	10-244	1/2	10-344
45	.0820	2.08 mm	1	10-045	2-1/8	10-245	1/2	10-345
46	.0810	2.06 mm	1	10-046	2-1/8	10-246	1/2	10-346
47	.0785	1.99 mm	1	10-047	2-1/8	10-247	1/2	10-347
48	.0760	1.93 mm	1	10-048	2-1/8	10-248	1/2	10-348
49	.0730	1.85 mm	1	10-049	2-1/8	10-249	1/2	10-349
50	.0700	1.78 mm	1	10-050	2-1/8	10-250	1/2	10-350

OTHER LENGTHS AND THREAD SIZES AVAILABLE ON REQUEST

THREADED SHANK ADAPTER DRILLS

COBALT - NAS965D
1/4-28 Thread
- FRACTIONAL SIZES -






SIZE	DECIMAL EQUIVALENT INCES	MILLIMETER EQUIVALENT	SHORT SERIES LENGTH	PART NUMBER	LONG SERIES LENGTH	PART NUMBER	STUBBY SERIES LENGTH	PART NUMBER
1/8	.1250	3.17 mm	1	**11-105**	2-1/8	**11-205**	1/2	**11-305**
5/32	.1562	3.97 mm	1-1/4	**11-107**	2-1/8	**11-207**	9/16	**11-307**
3/16	.1875	4.76 mm	1-1/4	**11-109**	2-1/8	**11-209**	9/16	**11-309**
7/32	.2188	5.56 mm	1-1/4	**11-111**	2-1/8	**11-211**	5/8	**11-311**
1/4	.2500	6.35 mm	1-1/4	**11-113**	2-1/8	**11-213**	5/8	**11-313**
5/16	.3125	7.94 mm	1-1/4	**11-117**	2-1/8	**11-217**	5/8	**11-317**
3/8	.3750	9.52 mm	1-1/4	**11-121**	2-1/8	**11-221**	3/4	**11-321**

COBALT - NAS965D
1/4-28 Thread
- LETTER SIZES -






SIZE	DECIMAL EQUIVALENT INCES	MILLIMETER EQUIVALENT	SHORT SERIES LENGTH	PART NUMBER	LONG SERIES LENGTH	PART NUMBER	STUBBY SERIES LENGTH	PART NUMBER
C	.2420	6.15 mm	1-1/4	**12-103**	2-1/8	**12-203**	5/8	**12-303**
D	.2460	6.25 mm	1-1/4	**12-104**	2-1/8	**12-204**	5/8	**12-304**
F	.2570	6.53 mm	1-1/4	**12-106**	2-1/8	**12-206**	5/8	**12-306**
G	.2610	6.63 mm	1-1/4	**12-107**	2-1/8	**12-207**	5/8	**12-307**
H	.2660	6.75 mm	1-1/4	**12-108**	2-1/8	**12-208**	5/8	**12-308**
J	.2770	7.03 mm	1-1/4	**12-110**	2-1/8	**12-210**	5/8	**12-310**
K	.2810	7.14 mm	1-1/4	**12-111**	2-1/8	**12-211**	5/8	**12-311**
L	.2900	7.37 mm	1-1/4	**12-112**	2-1/8	**12-212**	5/8	**12-312**
M	.2950	7.49 mm	1-1/4	**12-113**	2-1/8	**12-213**	5/8	**12-313**
N	.3020	7.67 mm	1-1/4	**12-114**	2-1/8	**12-214**	5/8	**12-314**
O	.3160	8.03 mm	1-1/4	**12-115**	2-1/8	**12-215**	5/8	**12-315**

COBALT - NAS965D
1/4-28 Thread
- VERY STUBBY / EXTRA LONG -




SIZE	DECIMAL EQUIVALENT INCES	MILLIMETER EQUIVALENT	VERY STUBBY LENGTH	PART NUMBER	EXTRA LONG LENGTH	PART NUMBER
# 50	.0700	1.78 mm	3/8	**10-450**	--	--
# 40	.0980	2.49 mm	3/8	**10-440**	2-1/2	**10-140**
# 30	.1285	3.26 mm	3/8	**10-430**	2-3/4	**10-130**
# 27	.1440	3.66 mm	3/8	**10-427**	3	**10-127**
# 21	.1590	4.04 mm	3/8	**10-421**	3	**10-121**
# 20	.1610	4.09 mm	3/8	**10-420**	3	**10-120**
# 16	.1770	4.50 mm	3/8	**10-416**	3	**10-116**
# 13	.1850	4.70 mm	3/8	**10-413**	3	**10-113**
# 12	.1890	4.80 mm	3/8	**10-412**	3	**10-112**
# 11	.1910	4.85 mm	3/8	**10-411**	3	**10-111**
# 10	.1935	4.92 mm	3/8	**10-410**	3	**10-110**
# 8	.1990	5.06 mm	3/8	**10-408**	3	**10-108**
# 5	.2055	5.22 mm	3/8	**10-405**	3	**10-105**
1/4	.2500	6.35 mm	3/8	**11-413**	3	**10-150**

OTHER LENGTHS AND THREAD SIZES AVAILABLE ON REQUEST

DRILL STOPS

AT 570 SERIES

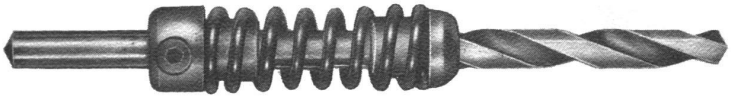

Primarily designed to control hole depth. This tool will also cushion the break-through of a drill and prevent chuck jaws from coming in contact with the skin surface. Unit locks on drill with a set screw.

PART NO.	DRILL SIZE
AT 570-50	#50
AT 570-40	#40
AT 570-30	#30
AT 570-28	#28
AT 570-21	#21
AT 570-20	#20
AT 570-12	#12
AT 570-11	#11
AT 570-10	#10
AT 570-1/4	1/4
AT 570-5/16	5/16

ORDER BY PART NO. ONLY

PORTABLE DRILL BUSHING ASSEMBLY

AT 589A . . . AT 589C SERIES

PART NO. FOR COMPLETE ASSEMBLY OF HOUSING & BUSHINGS	DRILL SIZE REF.	HOUSING PART NO.	BUSHING PART NO.	BUSHING THREAD SIZE
AT 589A-.098	#40	AT 589AA	AT 589AB-.098	½-13
AT 589A-.1285	#30		AT 589AB-.1285	
AT 589A-.159	#21		AT 589AB-.159	
AT 589A-.1562	5/32		AT 589AB-.1562	
AT 589A-.1875	3/16		AT 589AB-.1875	
AT 589A-.1935	#10		AT 589AB-.1935	
AT 589A-.2187	7/32		AT 589AB-.2187	
AT 589A-.250	1/4		AT 589AB-.250	
AT 589A-.257	F		AT 589AB-.257	
AT 589C-.2812	9/32	AT 589CA	AT 589CB-.2812	¾-16
AT 589C-.3125	5/16		AT 589CB-.3125	
AT 589C-.3437	11/32		AT 589CB-.3437	
AT 589C-.375	3/8		AT 589CB-.375	
AT 589C-.4375	7/16		AT 589CB-.4375	
AT 589C-.500	½		AT 589CB-.500	

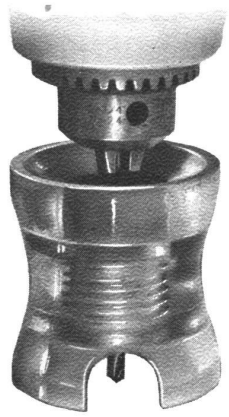

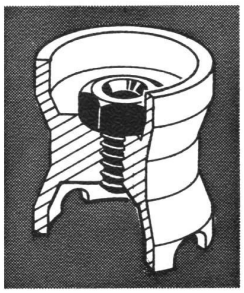

Bohrbuchsen-Satz
DRILL BUSHING ASSEMBLY KIT

Inhalt des Satzes:	CONTENTS OF THE KIT:
1 Aufbewahrungskasten 3 Plastik-Gehäuse zur Aufnahme der auswechselbaren Bohrbuchsen	**1 KIT BOX** **3 PLASTIC-HOUSING FOR INTERCHANGEABLE DRILL-BUSHINGS**
9 Bohrbuchsen in folgenden Größen:	**9 DRILL-BUSHING IN FOLLOWING SIZES:**
#40 **(2,50 mm)** #30 **(3,26 mm)** 5/32" **(3,97 mm)** #21 **(4,04 mm)** 3/16" **(4,76 mm)** #10 **(4,91 mm)** 7/32" **(5,56 mm)** 1/4" **(6,35 mm)** F **(6,53 mm)**	#40 **(2,50 mm)** #30 **(3,26 mm)** 5/32" **(3,97 mm)** #21 **(4,04 mm)** 3/16" **(4,76 mm)** #10 **(4,91 mm)** 7/32" **(5,56 mm)** 1/4" **(6,35 mm)** F **(6,53 mm)**



590-DBK

PUNCH TYPE STRAP DUPLICATORS

AT 500 . . . AT 500C SERIES

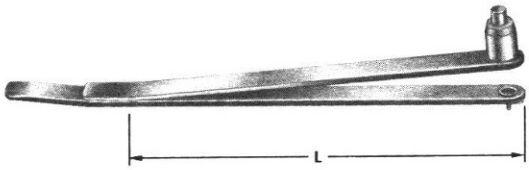

Spring Loaded Strap Duplicator with hardened marking pin permits the marking of sheet stock from a hidden pilot hole on the job, and is of particular help in marking hard-to-reach spots. Bevelled edge on the handle makes it a convenient tool for prying sheets apart.

ORDER BY PART NO. ONLY

PART NO.	PILOT & DRILL SIZE	L
AT500-51	#40	
AT500-52	#30	
AT500-53	#21	
AT500-54	#19	6¼
AT500-55	#10	
AT500-56	# 5	
AT500-57	"F"	
AT500-58	1/4	
AT500C-51	#40	
AT500C-52	#30	
AT500C-53	#21	
AT500C-54	#19	13¼
AT500C-55	#10	
AT500C-56	# 5	
AT500C-57	"F"	
AT500C-58	1/4	

DRILL BUSHING TYPE STRAP DUPLICATORS

AT 532 . . . AT 532C SERIES

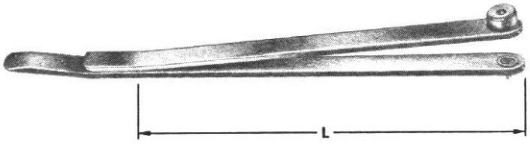

This tool provides an accurate method for drilling duplicate matching holes in over-lapping sheets. Hole to be duplicated is drilled through bushing when pilot is in place.

ORDER BY PART NO. ONLY

PART NO.	PILOT & DRILL SIZE	L
AT532-61	#40	
AT532-62	#30	
AT532-63	#21	
AT532-64	#19	6¼
AT532-65	#10	
AT532-66	# 5	
AT532-67	"F"	
AT532-68	1/4	
AT532C-61	#40	
AT532C-62	#30	
AT532C-63	#21	
AT532C-64	#19	13¼
AT532C-65	#10	
AT532C-66	# 5	
AT532C-67	"F"	
AT532C-68	1/4	

DRILL BUSHING INVERTED PILOT TYPE STRAP DUPLICATORS

AT 532A . . . AT 532D SERIES

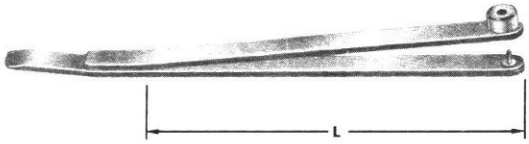

These tools are identical to the AT 532 and AT 532C Series, except that the pilot is inverted to allow hole duplication in places where the sheets cannot be pried apart.

ORDER BY PART NO. ONLY

PART NO.	PILOT & DRILL SIZE	L
AT532A-61	#40	
AT532A-62	#30	
AT532A-63	#21	
AT532A-64	#19	6¼
AT532A-65	#10	
AT532A-66	# 5	
AT532A-67	"F"	
AT532A-68	1/4	
AT532D-61	#40	
AT532D-62	#30	
AT532D-63	#21	
AT532D-64	#19	13¼
AT532D-65	#10	
AT532D-66	# 5	
AT532D-67	"F"	
AT532D-68	1/4	

PLATE NUT DRILL JIGS
AT 518 SERIES



Designed for accurate drilling of rivet holes for plate nuts. Manufactured with flexible handle to provide hand clearance when jig is in use.

ONE LUG TYPE

PART NO.	BOLT SIZE REF.	A	C	D
AT518-G	#6	.344	.139	#40
AT518-H	#8	.344	.164	#40
AT518-J	#10	.344	.191	#40
AT518-K	1/4	.344	.248	#40
AT518-L	#10 Spec.	.344	.213	#40
AT518-LF	#8 #10	.344	.281	#40
AT518-YF	1/4	.500	.343	#40

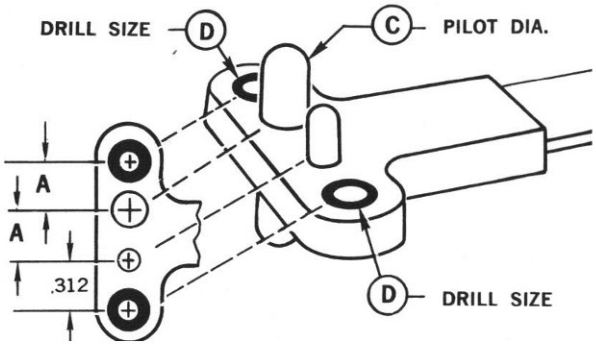

TWO LUG TYPE

PART NO.	BOLT SIZE REF.	A	B	C	D
AT518-A	#6	.344	.688	.139	#40
AT518-B	#8	.344	.688	.164	#40
AT518-C	#10	.344	.688	.191	#40
AT518-D	1/4	.500	1.000	.248	#40
AT518-E	5/16	.500	1.000	.312	#30
AT518-F	3/8	.500	1.000	.372	#30
AT518-M	–	.375	.750	.4375	#40
AT518-N	–	.500	1.000	.6875	#30
AT518-P	–	.6875	1.375	.811	#30
AT518-BF	#8 & #10	.344	.688	.281	#40
AT518-DF	1/4	.500	1.000	.343	#40

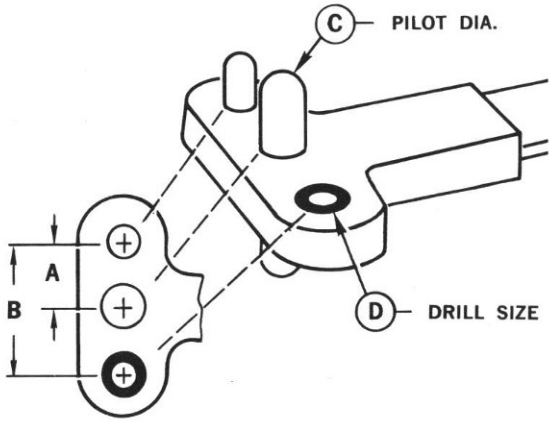

CORNER TYPE

PART NO.	BOLT SIZE REF.	A	C	D
AT518-R	# 6	.344	.139	# 40
AT518-S	# 8	.344	.164	# 40
AT518-T	# 10	.344	.191	# 40
AT518-U	1/4	.500	.248	# 40
AT518-V	5/16	.500	.312	# 30
AT518-W	3/8	.500	.372	# 30
AT518NAS-C-A5	5/16	.359	.312	# 30
AT518NAS-C-A6	3/8	.414	.372	# 30

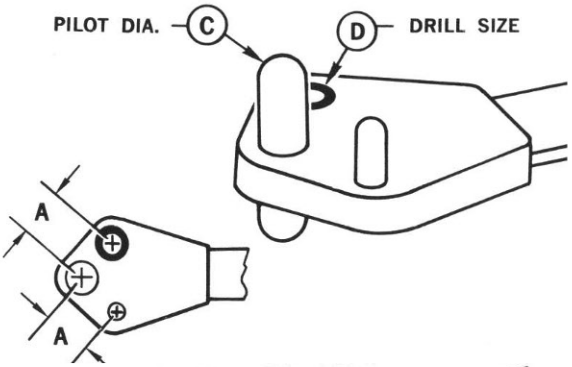

ONE LUG TYPE

PART NO.	BOLT SIZE REF.	A	C	D
AT518-PA	# 4	.203	.112	#40
AT518-PB	# 6	.218	.139	#40
AT518-PC	# 8	.234	.164	#40
AT518-PD	#10	.250	.191	#40
AT518-PE	#1/4	.281	.248	#40
AT518NAS-B-A02	# 2	.125	.086	#51
AT518NAS-B-A03	# 3	.133	.099	#51
AT518NAS-B-A04	# 4	.148	.112	#51
AT518NAS-B-A06	# 6	.171	.139	#51

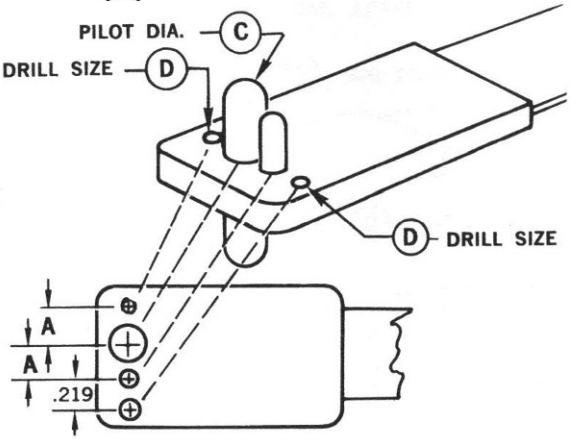

TWO LUG TYPE

PART NO.	BOLT SIZE REF.	A	B	C	D
AT518NA	# 4	.203	.406	.112	#40
AT518-NB	# 6	.218	.436	.139	#40
AT518-NC	# 8	.234	.468	.164	#40
AT518-ND	#10	.250	.500	.191	#40
AT518-NE	1/4	.281	.562	.248	#40
AT518-NF	5/16	.3125	.625	.312	#30
AT518NAS-A-A02	# 2	.125	.250	.086	#51
AT518NAS-A-A03	# 3	.1325	.265	.099	#51
AT518NAS-A-A04	# 4	.148	.296	.112	#51
AT518NAS-A-A06	# 6	.1715	.343	.139	#51

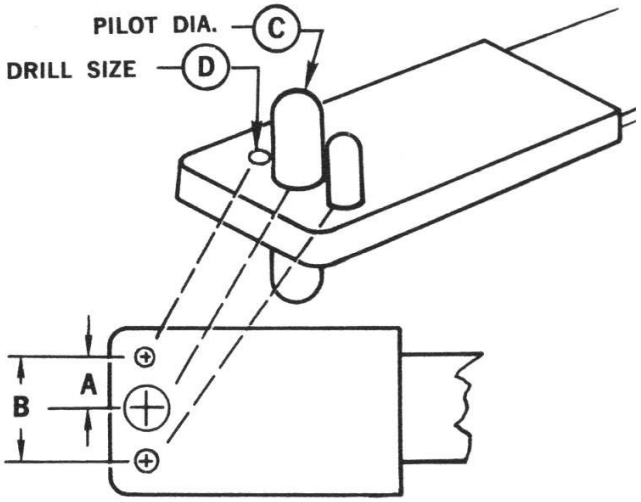

CORNER TYPE

PART NO.	BOLT SIZE REF.	A	C	D
AT518-SA	# 4	.203	.112	#40
AT518-SB	# 6	.218	.139	#40
AT518-SC	# 8	.234	.164	#40
AT518-SD	#10	.250	.191	#40
AT518-SE	1/4	.281	.248	#40
AT518-SF	5/16	.312	.312	#30
AT518NAS-C-A02	# 2	.125	.086	#51
AT518NAS-C-A03	# 3	.138	.099	#51
AT518NAS-C-A04	# 4	.148	.112	#51
AT518NAS-C-A06	# 6	.172	.139	#51

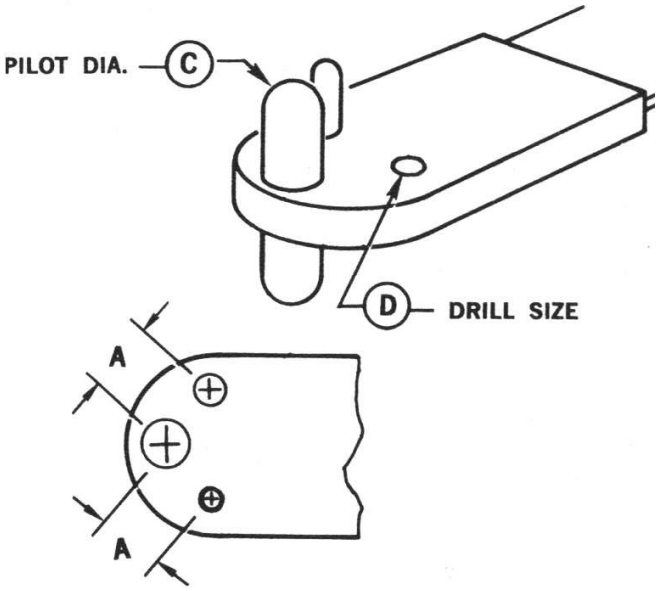

MINIATURE ANCHORNUT

PLATE NUT DRILL JIG

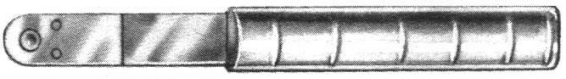

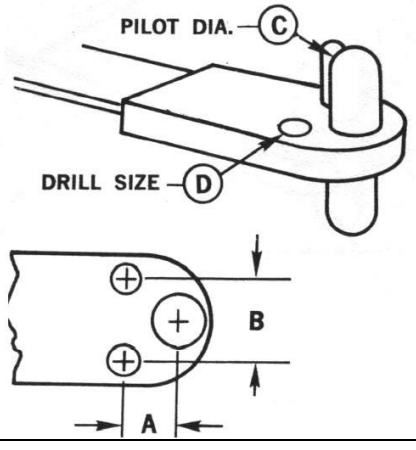

PART NO.	BOLT SIZE REF.	A	B	C	D
AT518-TA	#10	.250	.219	.191	#40
AT518-TB	1/4	.281	.219	.248	#40
AT518-TC	5/16	.312	.250	.312	#30
AT518NAS-D-A08	#8	.234	.219	.164	#40
AT518NAS-D-A5	5/16	.359	.269	.312	#30
AT518NAS-D-A6	3/8	.414	.269	.372	#30

Entgratwerkzeuge
BURRAWAY TOOLS

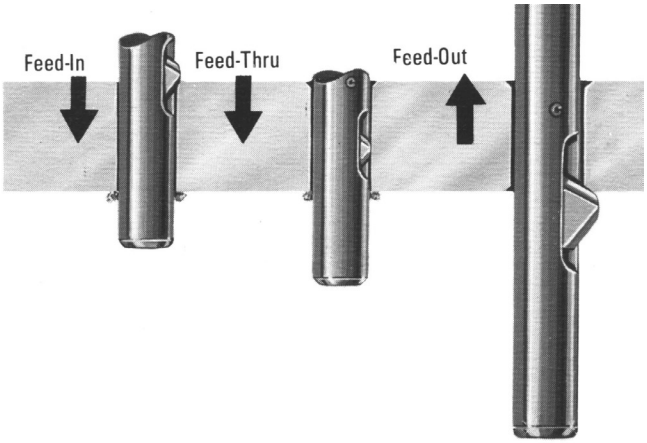

Type A

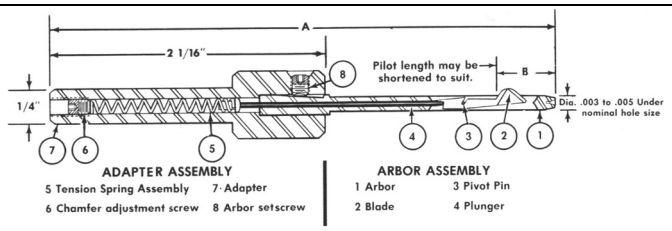

Standard

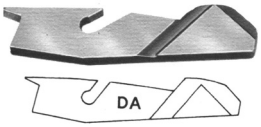

Ersatzmesser
REPLACEMENT BLADES

.0787" (2,0 mm) to 13/64" (5,16 mm)

Artikel Nr. PART NO.	**Bohrungsmaß** HOLE SIZE			**Maß**/DIM. A	**Maß**/DIM. B	**Ersatzmesser Nr.** REPLACEMENT BLADE NO.
CTP-078	**.0787"**		2,00 mm	3.3/8" **(85,7 mm)**	.45" **(11,4 mm)**	**CTP-3/32"**
CTP-090	**.0906"**		2,30 mm	3.3/8" **(85,7 mm)**	.45" **(11,4 mm)**	**CTP-3/32"**
CTP-093	**.0938"**	3/32"	2,38 mm	3.3/8" **(85,7 mm)**	.45" **(11,4 mm)**	**CTP-3/32"**
CTP-098	**.0984"**		2,50 mm	3.3/8" **(85,7 mm)**	.45" **(11,4 mm)**	**CTP-3/32"**
CTP-109	**.1094"**	7/64"	2,78 mm	3.3/8" **(85,7 mm)**	.45" **(11,4 mm)**	**CTP-3/32"**
CTP-118	**.1181"**		3,00 mm	3.3/8" **(85,7 mm)**	.45" **(11,4 mm)**	**CTP-1/8"**
CTP-125	**.1250"**	1/8"	3,18 mm	3.3/8" **(85,7 mm)**	.45" **(11,4 mm)**	**CTP-1/8"**
CTP-137	**.1378"**		3,50 mm	3.3/8" **(85,7 mm)**	.45" **(11,4 mm)**	**CTP-1/8"**
CTP-140	**.1406"**	9/64"	3,57 mm	3.3/8" **(85,7 mm)**	.45" **(11,4 mm)**	**CTP-1/8"**
CTP-156	**.1562"**	5/32"	3,97 mm	3.3/8" **(85,7 mm)**	.45" **(11,4 mm)**	**CTP-5/32"**
CTP-157	**.1575"**		4,00 mm	3.3/8" **(85,7 mm)**	.45" **(11,4 mm)**	**CTP-5/32"**
CTP-171	**.1719"**	11/64"	4,37 mm	3.3/8" **(85,7 mm)**	.45" **(11,4 mm)**	**CTP-5/32"**
CTP-177	**.1772"**		4,50 mm	4.1/8" **(104,8 mm)**	.72" **(18,3 mm)**	**CTP-3/16"**
CTP-187	**.1875"**	3/16"	4,76 mm	4.1/8" **(104,8 mm)**	.72" **(18,3 mm)**	**CTP-3/16"**
CTP-196	**.1968"**		5,00 mm	4.1/8" **(104,8 mm)**	.72" **(18,3 mm)**	**CTP-3/16"**
CTP-203	**.2031"**	13/64"	5,16 mm	4.1/8" **(104,8 mm)**	.72" **(18,3 mm)**	**CTP-3/16"**

Andere Abmessungen auf Anfrage / OTHER DIMENSIONS ON REQUEST

Entgratwerkzeuge
BURRAWAY TOOLS

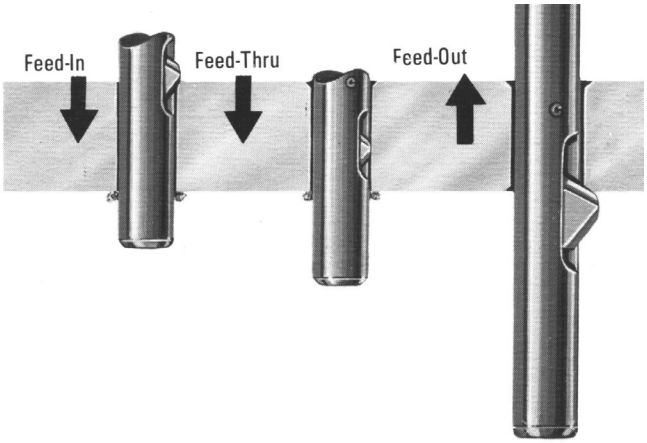

Type B

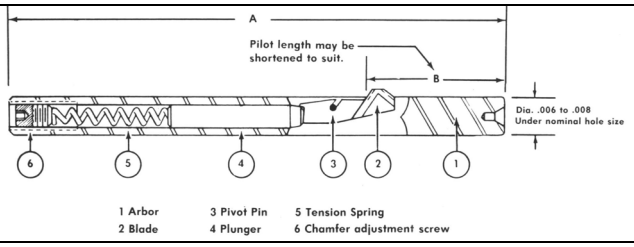

Standard

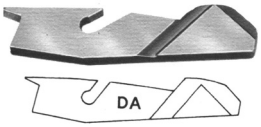

Ersatzmesser
REPLACEMENT BLADES

7/32" (5,56 mm) to 3/4" (19,05 mm)

Artikel Nr. PART NO.	**Bohrungsmaß** HOLE SIZE			**Maß**/DIM. A	**Maß**/DIM. B	**Ersatzmesser Nr.** REPLACEMENT BLADE NO.
CTP-216	**.2165"**		5,50 mm	4.1/2" **(114,3 mm)**	.87" **(22,1 mm)**	**CTP-1**
CTP-218	**.2188"**	7/32"	5,56 mm	4.1/2" **(114,3 mm)**	.87" **(22,1 mm)**	**CTP-1**
CTP-234	**.2344"**	15/64"	5,95 mm	4.1/2" **(114,3 mm)**	.87" **(22,1 mm)**	**CTP-1**
CTP-236	**.2362"**		6,00 mm	4.1/2" **(114,3 mm)**	.87" **(22,1 mm)**	**CTP-1**
CTP-250	**.2500"**	1/4"	6,35 mm	4.1/2" **(114,3 mm)**	.87" **(22,1 mm)**	**CTP-1**
CTP-255	**.2559"**		6,50 mm	4.1/2" **(114,3 mm)**	.87" **(22,1 mm)**	**CTP-1**
CTP-265	**.2656"**	17/64"	6,75 mm	4.1/2" **(114,3 mm)**	.87" **(22,1 mm)**	**CTP-1**
CTP-275	**.2756"**		7,00 mm	4.1/2" **(114,3 mm)**	.87" **(22,1 mm)**	**CTP-1**
CTP-281	**.2812"**	9/32"	7,14 mm	4.1/2" **(114,3 mm)**	.87" **(22,1 mm)**	**CTP-1**
CTP-295	**.2953"**		7,50 mm	4.1/2" **(114,3 mm)**	.96" **(24,4 mm)**	**CTP-2**
CTP-296	**.2969"**	19/64"	7,54 mm	4.1/2" **(114,3 mm)**	.96" **(24,4 mm)**	**CTP-2**
CTP-312	**.3125"**	5/16"	7,94 mm	4.1/2" **(114,3 mm)**	.96" **(24,4 mm)**	**CTP-2**
CTP-315	**.3150"**		8,00 mm	4.1/2" **(114,3 mm)**	.96" **(24,4 mm)**	**CTP-2**
CTP-328	**.3281"**	21/64"	8,33 mm	4.1/2" **(114,3 mm)**	.96" **(24,4 mm)**	**CTP-2**
CTP-334	**.3346"**		8,50 mm	4.1/2" **(114,3 mm)**	.96" **(24,4 mm)**	**CTP-2**
CTP-343	**.3438"**	11/32"	8,73 mm	4.1/2" **(114,3 mm)**	.96" **(24,4 mm)**	**CTP-2**
CTP-354	**.3543"**		9,00 mm	5" **(127,0 mm)**	1.00" **(25,4 mm)**	**CTP-3**
CTP-359	**.3594"**	23/64"	9,13 mm	5" **(127,0 mm)**	1.00" **(25,4 mm)**	**CTP-3**
CTP-374	**.3740"**		9,50 mm	5" **(127,0 mm)**	1.00" **(25,4 mm)**	**CTP-3**
CTP-375	**.3750"**	3/8"	9,53 mm	5" **(127,0 mm)**	1.00" **(25,4 mm)**	**CTP-3**
CTP-390	**.3906"**	25/64"	9,92 mm	5" **(127,0 mm)**	1.00" **(25,4 mm)**	**CTP-3**
CTP-393	**.3937"**		10,00 mm	5" **(127,0 mm)**	1.00" **(25,4 mm)**	**CTP-3**

Andere Abmessungen auf Anfrage / OTHER DIMENSIONS ON REQUEST

Drehmomentschrauber mit Pistolengriff und verstellbarer Ausrückkupplung

Adjustable Clutch Pistol Grip Screwdriver



Performance:

Torque: 20 in. lb (2.3 Nm) - 140 in. lb (15.8 Nm)
Speed: 300 rpm - 2500 rpm

Features:

Reversible
Trigger Start
Rapid or Shuttle Reverse
Comfort Grip

CE

Adjustable Clutch Pistol Grip Screwdrivers

Model Number	Max. Torque (Soft Joint)		Free Speed	Weight		Length		Side To Center		Air Consumption		Sound Level
	in. lb	Nm	rpm	lb	kg	in.	mm	in.	mm	cfm	l/s	dB(A)
Trigger Start - Rapid Reverse												
1OM2405Q	20	2.3	2000	1.9	0.86	7.8	198	0.7	17	8	4	75
1OM2305Q	25	2.8	1400	2.1	0.95	8.8	224	0.7	17	8	4	75
1OM2205Q	35	4.0	1000	2.1	0.95	8.8	224	0.7	17	8	4	75
1OM2105Q	50	5.7	725	2.1	0.95	8.8	224	0.7	17	8	4	75
.6 HP Trigger Start - Shuttle Reverse												
SSD6P25AC	40	4.5	2500	2.6	1.16	8.5	216	0.8	20	25	12	80
SSD6P20AC	55	6.2	2000	2.6	1.16	8.5	216	0.8	20	25	12	80
SSD6P12AC	100	11.3	1200	3.0	1.36	10.3	262	0.8	20	25	12	80
SSD6P7AC	140	15.8	700	3.0	1.36	10.3	262	0.8	20	25	12	80
1 HP Trigger Start - Shuttle Reverse												
SSD10P25AC	60	6.8	2500	2.8	1.25	8.4	213	0.8	20	30	14	80
SSD10P20AC	80	9.0	2000	2.8	1.25	8.4	213	0.8	20	30	14	80
SSD10P12AC	120	13.5	1200	3.2	1.45	10.2	259	0.8	20	30	14	80
SSD10P7AC	140	15.8	700	3.2	1.45	10.2	259	0.8	20	30	14	80
SSD10P5AC	140	15.8	500	3.2	1.45	10.2	259	0.8	20	30	14	80
SSD10P3AC	140	15.8	300	3.2	1.45	10.2	259	0.8	20	30	14	80

General:

Air Inlet Size: 1/4" NPT • Recommended Hose Size: 1/4" (6 mm) (1OM series); 3/8" (10 mm) • Performance rated @ 90 psig (6.2 bar) air pressure

Standard Equipment:

Parts List • Safety and Instruction Manual • Comfort Grip • Clutch Adjustment Wrench

HI-TORQUE DRIVER





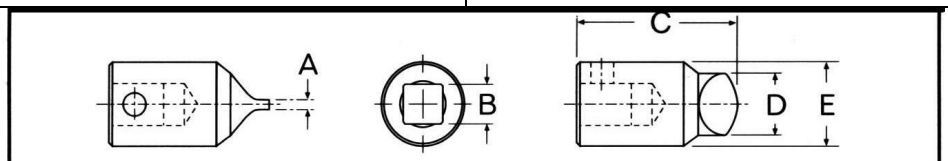

Zephyr Part No	A (Ref)	B (Ref)	C (Ref)	D (Ref)	E (Ref)	Recess	Nom. Screw Size	Driver Number	MIL*
ZHTS-1	.049	1/4	1	.274	1/2	1	3, 4, 5, 6	HTS-1	MIL-B-9946-1
ZHTS-2	.059	1/4	1	.295	1/2	2	8	HTS-2	MIL-B-9946-2
ZHTS-3	.059	1/4	1	.377	1/2	3	10	HTS-3	MIL-B-9946-3
ZHTS-4	.073	1/4	1	.502	1/2	4	1/4	HTS-4	MIL-B-9946-4
ZHTS-4A	.073	3/8	1	.502	1/2	4	1/4	HTS-4A	MIL-B-9946-4A
ZHTS-5	.079	3/8	1 1/4	.629	3/4	5	5/16	HTS-5	MIL-B-9946-5
ZHTS-6	.095	3/8	1 1/4	.745	3/4	6	3/8	HTS-6	MIL-B-9946-6
ZHTS-7	.112	1/2	1 5/8	.884	1	7	7/16	HTS-7	MIL-B-9946-7
ZHTS-8	.142	1/2	1 5/8	.995	1	8	1/2	HTS-8	MIL-B-9946-8

*Also conforms to MS33750 Hi Torque® is a registered Trademark of Voi-Shan.

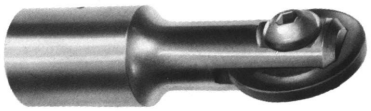

HT 3000M Series
Two-Piece Drivers

HT 3000M SERIES

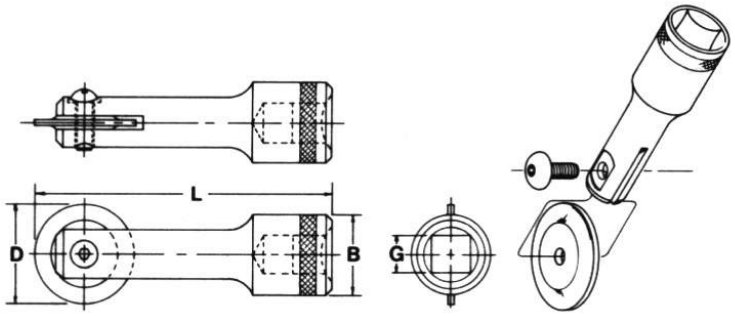

BOLT NOMINAL DIAMETER	HI-TORQUE RECESS NUMBER	ORDER BY HI-TORQUE TOOL NUMBER BELOW		B DIA.	D DIA.	G SQUARE DRIVE SOCKET	L
		COMPLETE ASSEMBLY	BLADE ONLY				
#10	HT3	HT3203M	HTB3M	.50	.552	.25	1.36
1/4	HT4	HT3304M	HTB4M	.75	.864	.37	2.67
5/16	HT5	HT3305M	HTB5M	.75	.990	.37	2.73
3/8	HT6	HT3306M	HTB6M	.75	1.240	.37	2.73
3/8	HT6	HT3406M	HTB6M	1.00	1.240	.50	3.17
7/16	HT7	HT3407M	HTB7M	1.00	1.375	.50	3.23
1/2	HT8	HT3408M	HTB8M	1.00	1.500	.50	3.30
9/16	HT9	HT3409M	HTB9M	1.00	1.750	.50	3.42
5/8	HT10	HT3410M	HTB10M	1.00	2.000	.50	3.55

Ersatzschraube/Replacement Screw: Button Head Cap Screw 8-32 x 1/4"

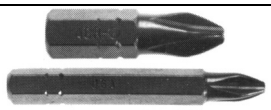

1/4" HEX SHANK

PHILLIPS INSERT BITS

Artikel Nr. PART NO.	Größe POINT SIZE	Gesamtlänge OVERALL LENGTH	Körperdurchmesser BODY DIAMETER
D1220AA	**0**	**1"** (25,4 mm)	
D1221AA	**1**	**1"** (25,4 mm)	
D1221AA-15	**1**	**1.1/2"** (38,1 mm)	
D1221AA-2	**1**	**2"** (50,8 mm)	
D1222AA	**2**	**1"** (25,4 mm)	
D1222AA-15	**2**	**1.1/2"** (38,1 mm)	
D1222AA-2	**2**	**2"** (50,8 mm)	
D1222AA-25	**2**	**2.1/2"** (63,8 mm)	
D1223AA	**3**	**1"** (25,4 mm)	
D1224AA	**4**	**1.1/4"** (31,8 mm)	

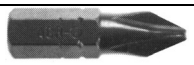

1/4" HEX SHANK

PHILLIPS INSERT BITS MILLED TYPE

Artikel Nr. PART NO.	Größe POINT SIZE	Gesamtlänge OVERALL LENGTH	Körperdurchmesser BODY DIAMETER
D1221AM	**1**	**1"** (25,4 mm)	
D1222AM	**2**	**1"** (25,4 mm)	
D1223AM	**3**	**1"** (25,4 mm)	



1/4" HEX SHANK

ACR - PHILLIPS INSERT BITS
WITH REMOVAL-RIPS

Artikel Nr. PART NO.	Größe POINT SIZE	Gesamtlänge OVERALL LENGTH	Körperdurchmesser BODY DIAMETER
D1221AA-R	**1**	**1"** (25,4 mm)	
D1222AA-R	**2**	**1"** (25,4 mm)	
D1223AA-R	**3**	**1"** (25,4 mm)	



1/4" HEX SHANK

ACR - PHILLIPS INSERT BITS
WITH REMOVAL & INSTALLATION RIPS

Artikel Nr. PART NO.	Größe POINT SIZE	Gesamtlänge OVERALL LENGTH	Körperdurchmesser BODY DIAMETER
D1221AA-ACR-B	**1**	**1"** (25,4 mm)	
D1222AA-ACR-B	**2**	**1"** (25,4 mm)	
D1223AA-ACR-B	**3**	**1"** (25,4 mm)	



1/4" HEX SHANK

ACR - PHILLIPS INSERT BITS
MILLED TYPE - WITH REMOVAL-RIPS

Artikel Nr. PART NO.	Größe POINT SIZE	Gesamtlänge OVERALL LENGTH	Körperdurchmesser BODY DIAMETER
D1221AM-R	**1**	**1"** (25,4 mm)	
D1222AM-R	**2**	**1"** (25,4 mm)	
D1223AM-R	**3**	**1"** (25,4 mm)	

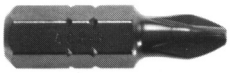

5/16" HEX SHANK

PHILLIPS INSERT BITS

Artikel Nr. PART NO.	Größe POINT SIZE	Gesamtlänge OVERALL LENGTH	Körperdurchmesser BODY DIAMETER
D1231AA	**1**	**1.1/4"** (31,8 mm)	
D1232AA	**2**	**1.1/4"** (31,8 mm)	
D1233AA	**3**	**1.1/4"** (31,8 mm)	
D1234AA	**4**	**1.1/4"** (31,8 mm)	
D1234AA-15	**4**	**1.1/2"** (38,1 mm)	

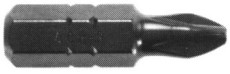

5/16" HEX SHANK

ACR - PHILLIPS INSERT BITS
WITH REMOVAL-RIPS

Artikel Nr. PART NO.	Größe POINT SIZE	Gesamtlänge OVERALL LENGTH	Körperdurchmesser BODY DIAMETER
D1231AA-R	**1**	**1.1/4"** (31,8 mm)	
D1232AA-R	**2**	**1.1/4"** (31,8 mm)	
D1233AA-R	**3**	**1.1/4"** (31,8 mm)	



1/4" HEX SHANK

PHILLIPS POWER BITS

Artikel Nr. PART NO.	Größe POINT SIZE	Gesamtlänge OVERALL LENGTH	Körperdurchmesser BODY DIAMETER
E1101AA	**1**	**1.15/16"** (49,2 mm)	**3/16"** (4,76 mm)
E1102AA	**2**	**1.15/16"** (49,2 mm)	**1/4"** (6,35 mm)
E1103AA	**3**	**1.15/16"** (49,2 mm)	**1/4"** (6,35 mm)
E1101AA-275	**1**	**2.3/4"** (69,9 mm)	**3/16"** (4,76 mm)
E1102AA-275	**2**	**2.3/4"** (69,9 mm)	**1/4"** (6,35 mm)
E1103AA-275	**3**	**2.3/4"** (69,9 mm)	**1/4"** (6,35 mm)
E1101AA-35	**1**	**3"** (76,2 mm)	**3/16"** (4,76 mm)
E1102AA-35	**2**	**3"** (76,2 mm)	**1/4"** (6,35 mm)
E1103AA-35	**3**	**3"** (76,2 mm)	**1/4"** (6,35 mm)
E1101AA-6	**1**	**6"** (152,4 mm)	**3/16"** (4,76 mm)
E1102AA-6	**2**	**6"** (152,4 mm)	**1/4"** (6,35 mm)
E1103AA-6	**3**	**6"** (152,4 mm)	**1/4"** (6,35 mm)



1/4" HEX SHANK

ACR - PHILLIPS POWER BITS
WITH REMOVAL-RIPS

Artikel Nr. PART NO.	Größe POINT SIZE	Gesamtlänge OVERALL LENGTH	Körperdurchmesser BODY DIAMETER
E1101AA-R	**1**	**1.15/16"** (49,2 mm)	**3/16"** (4,76 mm)
E1102AA-R	**2**	**1.15/16"** (49,2 mm)	**1/4"** (6,35 mm)
E1103AA-R	**3**	**1.15/16"** (49,2 mm)	**1/4"** (6,35 mm)
E1101AA-275-R	**1**	**2.3/4"** (69,9 mm)	**3/16"** (4,76 mm)
E1102AA-275-R	**2**	**2.3/4"** (69,9 mm)	**1/4"** (6,35 mm)
E1103AA-275-R	**3**	**2.3/4"** (69,9 mm)	**1/4"** (6,35 mm)
E1101AA-35-R	**1**	**3.1/2"** (88,9 mm)	**3/16"** (4,76 mm)
E1102AA-35-R	**2**	**3.1/2"** (88,9 mm)	**1/4"** (6,35 mm)
E1103AA-35-R	**3**	**3.1/2"** (88,9 mm)	**1/4"** (6,35 mm)
E1101AA-6-R	**1**	**6"** (152,4 mm)	**3/16"** (4,76 mm)
E1102AA-6-R	**2**	**6"** (152,4 mm)	**1/4"** (6,35 mm)
E1103AA-6-R	**3**	**6"** (152,4 mm)	**1/4"** (6,35 mm)

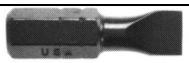

1/4" HEX SHANK

SLOTTED INSERT BITS



Artikel Nr. PART NO.	Schraubengröße SCREW SIZE	Blatt-Stärke ca. BLADE THICKNESS APPR.	Blatt-Weite ca. BLADE WIDTH APPR.	Gesamtlänge OVERALL LENGTH
H3199A	**2F-3R**	**.026"** (0,66 mm)	**.138"** (3,51 mm)	**1"** (25,4 mm)
H3201A	**3F-4R**	**.030"** (0,76 mm)	**.154"** (3,91 mm)	**1"** (25,4 mm)
H3211A	**4F-5R**	**.034"** (0,86 mm)	**.170"** (4,32 mm)	**1"** (25,4 mm)
H3205A	**5F-6R**	**.036"** (0,91 mm)	**.219"** (5,56 mm)	**1"** (25,4 mm)
H3212A	**6F-8R**	**.040"** (1,02 mm)	**.219"** (5,56 mm)	**1"** (25,4 mm)
H3213A	**8F-10R**	**.042"** (1,07 mm)	**.250"** (6,35 mm)	**1"** (25,4 mm)
H3214A	**10F-12R**	**.046"** (1,17 mm)	**.281"** (7,14 mm)	**1"** (25,4 mm)
H3215A	**12F-14R**	**.050"** (1,27 mm)	**.297"** (7,54 mm)	**1"** (25,4 mm)



1/4" HEX SHANK

SLOTTED INSERT BITS



Artikel Nr. PART NO.	Schraubengröße SCREW SIZE	Blatt-Stärke ca. BLADE THICKNESS APPR.	Blatt-Weite ca. BLADE WIDTH APPR.	Gesamtlänge OVERALL LENGTH
H3219A	**2F-3R**	**.026"** (0,66 mm)	**.138"** (3,51 mm)	**1.1/2"** (38,1 mm)
H3220A	**3F-4R**	**.030"** (0,76 mm)	**.154"** (3,91 mm)	**1.1/2"** (38,1 mm)
H3221A	**4F-5R**	**.034"** (0,86 mm)	**.188"** (4,78 mm)	**1.1/2"** (38,1 mm)
H3222A	**6F-8R**	**.040"** (1,02 mm)	**.218"** (5,54 mm)	**1.1/2"** (38,1 mm)
H3223A	**8F-10R**	**.042"** (1,07 mm)	**.250"** (6,35 mm)	**1.1/2"** (38,1 mm)
H3224A	**10F-12R**	**.046"** (1,17 mm)	**.281"** (7,14 mm)	**1.1/2"** (38,1 mm)
H3225A	**12F-14R**	**.050"** (1,27 mm)	**.297"** (7,54 mm)	**1.1/2"** (38,1 mm)
H3226A	**14F-16R**	**.055"** (1,40 mm)	**.344"** (8,74 mm)	**1.1/2"** (38,1 mm)

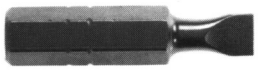

5/16" HEX SHANK

SLOTTED INSERT BITS



Artikel Nr. PART NO.	Schraubengröße SCREW SIZE	Blatt-Stärke ca. BLADE THICKNESS APPR.	Blatt-Weite ca. BLADE WIDTH APPR.	Gesamtlänge OVERALL LENGTH
H3231A	**4F-5R**	**.034"** (0,86 mm)	**.188"** (4,78 mm)	**1.1/2"** (38,1 mm)
H3232A	**6F-8R**	**.040"** (1,02 mm)	**.218"** (5,54 mm)	**1.1/2"** (38,1 mm)
H3233A	**8F-10R**	**.042"** (1,07 mm)	**.250"** (6,35 mm)	**1.1/2"** (38,1 mm)
H3234A	**10F-12R**	**.046"** (1,17 mm)	**.281"** (7,14 mm)	**1.1/2"** (38,1 mm)
H3235A	**12F-14R**	**.050"** (1,27 mm)	**.297"** (7,54 mm)	**1.1/2"** (38,1 mm)
H3236A	**14F-16R**	**.055"** (1,40 mm)	**.344"** (8,74 mm)	**1.1/2"** (38,1 mm)

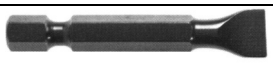

1/4" HEX SHANK

SLOTTED POWER BITS



Artikel Nr. PART NO.	Schraubengröße SCREW SIZE	Blatt-Stärke ca. BLADE THICKNESS APPR.	Blatt-Weite ca. BLADE WIDTH APPR.	Gesamtlänge OVERALL LENGTH
E3104A	**8F-10R**	**.042"** (1,07 mm)	**.275"** (6,99 mm)	**1.15/16"** (49,2 mm)
E3105A	**10F-12R**	**.046"** (1,17 mm)	**.312"** (7,92 mm)	**1.15/16"** (49,2 mm)
E3106A	**12F-14R**	**.050"** (1,27 mm)	**.360"** (9,14 mm)	**1.15/16"** (49,2 mm)
E3104A275	**8F-10R**	**.042"** (1,07 mm)	**.275"** (6,99 mm)	**2.3/4"** (69,9 mm)
E3105A275	**10F-12R**	**.046"** (1,17 mm)	**.312"** (7,92 mm)	**2.3/4"** (69,9 mm)
E3106A275	**12F-14R**	**.050"** (1,27 mm)	**.360"** (9,14 mm)	**2.3/4"** (69,9 mm)
E3104A3	**8F-10R**	**.042"** (1,07 mm)	**.275"** (6,99 mm)	**3"** (76,2 mm)
E3105A3	**10F-12R**	**.046"** (1,17 mm)	**.312"** (7,92 mm)	**3"** (76,2 mm)
E3106A3	**12F-14R**	**.050"** (1,27 mm)	**.360"** (9,14 mm)	**3"** (76,2 mm)



1/4" HEX SHANK

SLOTTED POWER BITS
REDUCED SHANK DIAMETER

Artikel Nr. PART NO.	Schraubengröße SCREW SIZE	Blatt-Stärke ca. BLADE THICKNESS APPR.	Blatt-Weite ca. BLADE WIDTH APPR.	Gesamtlänge OVERALL LENGTH
E3098A	**1F-2R**	**.022"** (0,56 mm)	**.122"** (3,10 mm)	**1.15/16"** (49,2 mm)
E3100A	**3F-4R**	**.030"** (0,76 mm)	**.154"** (3,91 mm)	**1.15/16"** (49,2 mm)
E3101A	**4F-5R**	**.034"** (0,86 mm)	**.188"** (4,78 mm)	**1.15/16"** (49,2 mm)
E3102A	**5F-6R**	**.036"** (0,91 mm)	**.250"** (6,35 mm)	**1.15/16"** (49,2 mm)
E3103A	**6F-8R**	**.038"** (0,97 mm)	**.250"** (6,35 mm)	**1.15/16"** (49,2 mm)
E3101A275	**4F-5R**	**.034"** (0,86 mm)	**.188"** (4,78 mm)	**2.3/4"** (69,9 mm)
E3102A275	**5F-6R**	**.036"** (0,91 mm)	**.250"** (6,35 mm)	**2.3/4"** (69,9 mm)
E3103A275	**6F-8R**	**.038"** (0,97 mm)	**.250"** (6,35 mm)	**2.3/4"** (69,9 mm)
E3098A3	**1F-2R**	**.022"** (0,56 mm)	**.122"** (3,10 mm)	**3"** (76,2 mm)
E3100A3	**3F-4R**	**.030"** (0,76 mm)	**.154"** (3,91 mm)	**3"** (76,2 mm)
E3101A3	**4F-5R**	**.034"** (0,86 mm)	**.188"** (4,78 mm)	**3"** (76,2 mm)
E3102A3	**5F-6R**	**.036"** (0,91 mm)	**.250"** (6,35 mm)	**3"** (76,2 mm)
E3103A3	**6F-8R**	**.038"** (0,97 mm)	**.250"** (6,35 mm)	**3"** (76,2 mm)



1/4" HEX SHANK

FRENCH RECESS INSERT BITS

Artikel Nr. PART NO.	Größe POINT SIZE	Gesamtlänge OVERALL LENGTH	Körperdurchmesser BODY DIAMETER
H7224AA	**4**	**1"** (25,4 mm)	
H7225AA	**5**	**1"** (25,4 mm)	
H7226AA	**6**	**1"** (25,4 mm)	
H7228AA	**8**	**1"** (25,4 mm)	

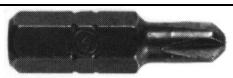

5/16" HEX SHANK

FRENCH RECESS INSERT BITS

Artikel Nr. PART NO.	Größe POINT SIZE	Gesamtlänge OVERALL LENGTH	Körperdurchmesser BODY DIAMETER
H7326AA	**6**	**1.1/4"** (31,8 mm)	
H7328AA	**8**	**1.1/4"** (31,8 mm)	



MORTORQ SPIRAL DRIVE INSERT BITS

Artikel Nr. PART NO.	Größe POINT SIZE	Gesamtlänge OVERALL LENGTH	Sechskantschaft HEX SHANK
ZMT-00	**00**	**1"** (25,4 mm)	**1/4"**
ZMT-0	**0**	**1"** (25,4 mm)	**1/4"**
ZMT-1	**1**	**1"** (25,4 mm)	**1/4"**
ZMT-2	**2**	**1"** (25,4 mm)	**1/4"**
Z5MT-3	**3**	**1"** (25,4 mm)	**5/16"**



MORTORQ SPIRAL POWER BITS

Artikel Nr. PART NO.	Größe POINT SIZE	Gesamtlänge OVERALL LENGTH	Sechskantschaft HEX SHANK
ZMTP-0	**0**	**1.15/16"** (49,2 mm)	**1/4"**
ZMTP-1	**1**	**1.15/16"** (49,2 mm)	**1/4"**
ZMTP-2	**2**	**1.15/16"** (49,2 mm)	**1/4"**
Z7MTP-3	**3**	**3.1/2"** (88,9 mm)	**7/16"**
Z7MTP-4	**4**	**3.1/2"** (88,9 mm)	**7/16"**
Z10MTP-5	**5**	**3.1/2"** (88,9 mm)	**5/8"**



1/4" HEX SHANK

SOCKET HEAD (ALLEN) INSERT BITS

Artikel Nr. PART NO.	Größe HEX SIZE	Gesamtlänge OVERALL LENGTH	Körperdurchmesser BODY DIAMETER
H5221A	**1/16"** (1,59 mm)	**1"** (25,4 mm)	
H5222A	**5/64"** (1,98 mm)	**1"** (25,4 mm)	
H5223A	**3/32"** (2,38 mm)	**1"** (25,4 mm)	
H5224A	**7/64"** (2,78mm)	**1"** (25,4 mm)	
H5225A	**1/8"** (3,18 mm)	**1"** (25,4 mm)	
H5226A	**9/64"** (3,57 mm)	**1"** (25,4 mm)	
H5227A	**5/32"** (3,97 mm)	**1.5/16"** (33,3 mm)	
H5228A	**3/16"** (4,76 mm)	**1.5/16"** (33,3 mm)	
H5229A	**7/32"** (5,56 mm)	**1.5/16"** (33,3 mm)	
H5220A	**1/4"** (6,35 mm)	**1.5/16"** (33,3 mm)	



5/16" HEX SHANK

SOCKET HEAD (ALLEN) INSERT BITS

Artikel Nr. PART NO.	Größe HEX SIZE	Gesamtlänge OVERALL LENGTH	Körperdurchmesser BODY DIAMETER
H5234A	**5/32"** (3,97 mm)	**1.5/16"** (33,3 mm)	
H5235A	**3/16"** (4,76 mm)	**1.5/16"** (33,3 mm)	
H5236A	**7/32"** (5,56 mm)	**1.5/16"** (33,3 mm)	
H5237A	**1/4"** (6,35 mm)	**1.5/16"** (33,3 mm)	
H5238A	**5/16"** (7,94 mm)	**1.5/16"** (33,3 mm)	
H5239A	**3/8"** (9,53 mm)	**1.5/16"** (33,3 mm)	



1/4" HEX SHANK

SOCKET HEAD (ALLEN) INSERT BITS METRIC

Artikel Nr. PART NO.	Größe HEX SIZE	Gesamtlänge OVERALL LENGTH	Körperdurchmesser BODY DIAMETER
H52215XM	**1,5 mm** (.059)	**1"** (25,4 mm)	
H5222XM	**2,0 mm** (.079)	**1"** (25,4 mm)	
H52225XM	**2,5 mm** (.098)	**1"** (25,4 mm)	
H5223XM	**3,0 mm** (.118)	**1"** (25,4 mm)	
H5204XM	**4,0 mm** (.157)	**1"** (25,4 mm)	
H5205XM	**5,0 mm** (.197)	**1"** (25,4 mm)	
H5206XM	**6,0 mm** (.236)	**1"** (25,4 mm)	
H5207XM	**7,0 mm** (.276)	**1"** (25,4 mm)	
H5208XM	**8,0 mm** (.315)	**1"** (25,4 mm)	
H5224XM	**4,0 mm** (.157)	**1.5/16"** (33,3 mm)	
H5225XM	**5,0 mm** (.197)	**1.5/16"** (33,3 mm)	
H5226XM	**6,0 mm** (.236)	**1.5/16"** (33,3 mm)	
H5227XM	**7,0 mm** (.276)	**1.5/16"** (33,3 mm)	
H5228XM	**8,0 mm** (.315)	**1.1/4"** (31,7 mm)	



5/16" HEX SHANK

SOCKET HEAD (ALLEN) INSERT BITS METRIC

Artikel Nr. PART NO.	Größe HEX SIZE	Gesamtlänge OVERALL LENGTH	Körperdurchmesser BODY DIAMETER
H5235XM	**5,0 mm** (.197)	**1.5/16"** (33,3 mm)	
H5236XM	**6,0 mm** (.236)	**1.5/16"** (33,3 mm)	
H5238XM	**8,0 mm** (.315)	**1.5/16"** (33,3 mm)	
H5230XM	**10,0 mm** (.394)	**1.5/16"** (33,3 mm)	



1/4" HEX SHANK

SOCKET HEAD (ALLEN) POWER BITS METRIC

Artikel Nr. PART NO.	Größe HEX SIZE	Gesamtlänge OVERALL LENGTH	Körperdurchmesser BODY DIAMETER
E5102XM	**2,0 mm** (.079)	**1.15/16"** (49,2 mm)	
E51025XM	**2,5 mm** (.098)	**1.15/16"** (49,2 mm)	
E5103XM	**3,0 mm** (.118)	**1.15/16"** (49,2 mm)	
E5104XM	**4,0 mm** (.157)	**1.15/16"** (49,2 mm)	
E5105XM	**5,0 mm** (.197)	**1.15/16"** (49,2 mm)	
E5106XM	**6,0 mm** (.236)	**1.15/16"** (49,2 mm)	
E5108XM	**8,0 mm** (.315)	**1.15/16"** (49,2 mm)	
E5110XM	**10,0 mm** (.394)	**1.15/16"** (49,2 mm)	

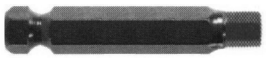

7/16" HEX SHANK

SOCKET HEAD (ALLEN) POWER BITS METRIC

Artikel Nr. PART NO.	Größe HEX SIZE	Gesamtlänge OVERALL LENGTH	Körperdurchmesser BODY DIAMETER
E5095XM35	**5,0 mm** (.197)	**3.1/2"** (88,9 mm)	
E5096XM35	**6,0 mm** (.236)	**3.1/2"** (88,9 mm)	
E5098XM35	**8,0 mm** (.315)	**3.1/2"** (88,9 mm)	
E5090XM35	**10,0 mm** (.394)	**3.1/2"** (88,9 mm)	



1/4" HEX SHANK

SQUARE RECESS INSERT BITS

Artikel Nr. PART NO.	Größe POINT SIZE	Schraubengröße SCREW SIZE	Gesamtlänge OVERALL LENGTH
H8100XX	**0**	**3 & 4**	**1"** (25,4 mm)
H8101XX	**1**	**5, 6, 7**	**1"** (25,4 mm)
H8102XX	**2**	**8, 9, 10**	**1"** (25,4 mm)
H8103XX	**3**	**12, 14, 1/4**	**1"** (25,4 mm)



1/4" / 5/16" HEX SHANK

SPANNER TAMPER RESISTANT

Artikel Nr. PART NO.	Nenngröße DRIVER SIZE	Größe (Ref.) POINT SIZE (Ref.)	Hex Shank	Gesamtlänge OVERALL LENGTH
J9221	**4**	**.130"**	**1/4"**	**1"** (25,4 mm)
J9222	**6**	**.174"**	**1/4"**	**1"** (25,4 mm)
J9223	**8**	**.211"**	**1/4"**	**1"** (25,4 mm)
J9224	**10**	**.249"**	**1/4"**	**1"** (25,4 mm)
J9231A	**4**	**.130"**	**5/16"**	**1.1/2"** (38,1 mm)
J9232A	**6**	**.174"**	**5/16"**	**1.1/2"** (38,1 mm)
J9233A	**8**	**.211"**	**5/16"**	**1.1/2"** (38,1 mm)

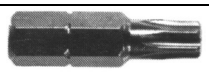

1/4" HEX SHANK

TORX INSERT BITS

Artikel Nr. PART NO.	Nenngröße DRIVER SIZE	Größe (Ref.) POINT SIZE (Ref.)	Gesamtlänge OVERALL LENGTH
ZOT6X	T6	.065"	1" (25,4 mm)
ZOT7X	T7	.077"	1" (25,4 mm)
ZOT8X	T8	.090"	1" (25,4 mm)
ZOT9X	T9	.097"	1" (25,4 mm)
ZOT10X	T10	.107"	1" (25,4 mm)
ZOT15X	T15	.128"	1" (25,4 mm)
ZOT20X	T20	.151"	1" (25,4 mm)
ZOT25X	T25	.173"	1" (25,4 mm)
ZOT27X	T27	.195	1" (25,4 mm)
ZOT30X	T30	.216"	1" (25,4 mm)
ZOT40X	T40	.260"	1" (25,4 mm)

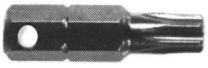

1/4" HEX SHANK

TORX INSERT BITS
WITH HOLE THRU HEX SHANK

Artikel Nr. PART NO.	Nenngröße DRIVER SIZE	Größe (Ref.) POINT SIZE (Ref.)	Gesamtlänge OVERALL LENGTH
ZOT20XD	T20	.151"	1" (25,4 mm)
ZOT27XD	T27	.195	1" (25,4 mm)
ZOT30XD	T30	.216"	1" (25,4 mm)
ZOT40XD	T40	.260"	1" (25,4 mm)
ZOT45XD	T45	.306"	1" (25,4 mm)

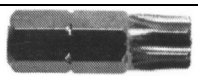

5/16" HEX SHANK

TORX INSERT BITS

Artikel Nr. PART NO.	Nenngröße DRIVER SIZE	Größe (Ref.) POINT SIZE (Ref.)	Gesamtlänge OVERALL LENGTH
Z5T30X	T30	.216"	1.1/4" (31,8 mm)
Z5T40X	T40	.260"	1.1/4" (31,8 mm)
Z5T45X	T45	.306"	1.1/4" (31,8 mm)
Z5T50X	T50	.346"	1.1/4" (31,8 mm)
Z5T55X	T55	.440"	1.1/4" (31,8 mm)

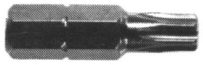

1/4" / 5/16" / 7/16" / 1/2" HEX SHANK

TORX PLUS INSERT BITS

Artikel Nr. PART NO.	Nenngröße DRIVER SIZE	Größe (Ref.) POINT SIZE (Ref.)	Hex Shank	Gesamtlänge OVERALL LENGTH
Z0T10IP	10IP	.107"	1/4"	1" (25,4 mm)
ZOT15IP	15IP	.128"	1/4"	1" (25,4 mm)
ZOT20IP	20IP	.151"	1/4"	1" (25,4 mm)
ZOT25IP	25IP	.173"	1/4"	1" (25,4 mm)
ZOT30IP	30IP	.195"	1/4"	1" (25,4 mm)
Z5T40IP	40IP	.260"	5/16"	1.1/4" (31,8 mm)
Z5T45IP	45IP	.306"	5/16"	1.1/4" (31,8 mm)
Z5T50IP	50IP	.346"	5/16"	1.1/4" (31,8 mm)
Z5T55IP	55IP	.440"	7/16"	1.1/2" (38,1 mm)
Z8T60IP	60IP	.520"	1/2"	1.1/2" (38,1 mm)

Andere Abmessungen auf Anfrage / OTHER DIMENSIONS ON REQUEST

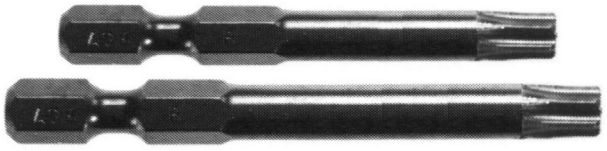

1/4" HEX SHANK

TORX POWER BITS

Artikel Nr. PART NO.	**Nenngröße** DRIVER SIZE	**Größe (Ref.)** POINT SIZE (Ref.)	**Gesamtlänge** OVERALL LENGTH	**Durchmesser** BODY DIAMETER
ZPT6X	**T6**	**.065"**	**1.15/16"** (49,2 mm)	**1/8"** (3,18 mm)
ZPT7X	**T7**	**.077"**	**1.15/16"** (49,2 mm)	**1/8"** (3,18 mm)
ZPT8X	**T8**	**.090"**	**1.15/16"** (49,2 mm)	**1/8"** (3,18 mm)
ZPT9X	**T9**	**.097"**	**1.15/16"** (49,2 mm)	**1/8"** (3,18 mm)
ZPT10X	**T10**	**.107"**	**1.15/16"** (49,2 mm)	**5/32"** (3,97 mm)
ZPT15X	**T15**	**.128"**	**1.15/16"** (49,2 mm)	**5/32"** (3,97 mm)
ZPT20X	**T20**	**.151"**	**1.15/16"** (49,2 mm)	**3/16"** (4,76 mm)
ZPT25X	**T25**	**.173"**	**1.15/16"** (49,2 mm)	**3/16"** (4,76 mm)
ZPT27X	**T27**	**.195**	**1.15/16"** (49,2 mm)	**1/4"** (6,35 mm)
ZPT30X	**T30**	**.216"**	**1.15/16"** (49,2 mm)	**1/4"** (6,35 mm)
ZPT40X	**T40**	**.260"**	**1.15/16"** (49,2 mm)	**5/16"** (7,93 mm)
ZPT7X275	**T7**	**.077"**	**2.3/4"** (69,9 mm)	**1/8"** (3,18 mm)
ZPT8X275	**T8**	**.090"**	**2.3/4"** (69,9 mm)	**1/8"** (3,18 mm)
ZPT9X275	**T9**	**.097"**	**2.3/4"** (69,9 mm)	**1/8"** (3,18 mm)
ZPT10X275	**T10**	**.107"**	**2.3/4"** (69,9 mm)	**5/32"** (3,97 mm)
ZPT15X275	**T15**	**.128"**	**2.3/4"** (69,9 mm)	**5/32"** (3,97 mm)
ZPT20X275	**T20**	**.151"**	**2.3/4"** (69,9 mm)	**3/16"** (4,76 mm)
ZPT25X275	**T25**	**.173"**	**2.3/4"** (69,9 mm)	**3/16"** (4,76 mm)
ZPT27X275	**T27**	**.195**	**2.3/4"** (69,9 mm)	**1/4"** (6,35 mm)
ZPT30X275	**T30**	**.216"**	**2.3/4"** (69,9 mm)	**1/4"** (6,35 mm)
ZPT40X275	**T40**	**.260"**	**2.3/4"** (69,9 mm)	**5/16"** (7,93 mm)
ZPT7X35	**T7**	**.077"**	**3.1/2"** (88,9 mm)	**1/8"** (3,18 mm)
ZPT8X35	**T8**	**.090"**	**3.1/2"** (88,9 mm)	**1/8"** (3,18 mm)
ZPT9X35	**T9**	**.097"**	**3.1/2"** (88,9 mm)	**1/8"** (3,18 mm)
ZPT10X35	**T10**	**.107"**	**3.1/2"** (88,9 mm)	**5/32"** (3,97 mm)
ZPT15X35	**T15**	**.128"**	**3.1/2"** (88,9 mm)	**5/32"** (3,97 mm)
ZPT20X35	**T20**	**.151"**	**3.1/2"** (88,9 mm)	**3/16"** (4,76 mm)
ZPT25X35	**T25**	**.173"**	**3.1/2"** (88,9 mm)	**3/16"** (4,76 mm)
ZPT27X35	**T27**	**.195**	**3.1/2"** (88,9 mm)	**1/4"** (6,35 mm)
ZPT30X35	**T30**	**.216"**	**3.1/2"** (88,9 mm)	**1/4"** (6,35 mm)
ZPT40X35	**T40**	**.260"**	**3.1/2"** (88,9 mm)	**5/16"** (7,93 mm)
ZPT7X6	**T7**	**.077"**	**6"** (152,4 mm)	**1/8"** (3,18 mm)
ZPT8X6	**T8**	**.090"**	**6"** (152,4 mm)	**1/8"** (3,18 mm)
ZPT9X6	**T9**	**.097"**	**6"** (152,4 mm)	**1/8"** (3,18 mm)
ZPT10X6	**T10**	**.107"**	**6"** (152,4 mm)	**5/32"** (3,97 mm)
ZPT15X6	**T15**	**.128"**	**6"** (152,4 mm)	**5/32"** (3,97 mm)
ZPT20X6	**T20**	**.151"**	**6"** (152,4 mm)	**3/16"** (4,76 mm)
ZPT25X6	**T25**	**.173"**	**6"** (152,4 mm)	**3/16"** (4,76 mm)
ZPT27X6	**T27**	**.195**	**6"** (152,4 mm)	**1/4"** (6,35 mm)
ZPT30X6	**T30**	**.216"**	**6"** (152,4 mm)	**1/4"** (6,35 mm)
ZPT40X6	**T40**	**.260"**	**6"** (152,4 mm)	**5/16"** (7,93 mm)

Andere Abmessungen auf Anfrage / OTHER DIMENSIONS ON REQUEST

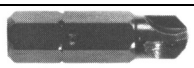

1/4" HEX SHANK

TORQ-SET INSERT BITS

Artikel Nr. PART NO.	Schraubengröße SCREW SIZE	Gesamtlänge OVERALL LENGTH	Körperdurchmesser BODY DIAMETER
TS212-0	0	1" (25,4 mm)	
TS212-1	1	1" (25,4 mm)	
TS212-2	2	1" (25,4 mm)	
TS212-3	3	1" (25,4 mm)	
TS212-4	4	1" (25,4 mm)	
TS212-5	5	1" (25,4 mm)	
TS212-6	6	1" (25,4 mm)	
TS212-8	8	1" (25,4 mm)	
TS212-10	10	1" (25,4 mm)	
TS212-1/4	1/4	1" (25,4 mm)	

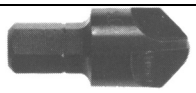

1/4" HEX SHANK

TORQ-SET INSERT BITS
BULLNOSE

Artikel Nr. PART NO.	Schraubengröße SCREW SIZE	Gesamtlänge OVERALL LENGTH	Körperdurchmesser BODY DIAMETER
TS212-1/4B	1/4	1" (25,4 mm)	
TS212-5/16B	5/16	1" (25,4 mm)	



5/16" HEX SHANK

TORQ-SET INSERT BITS

Artikel Nr. PART NO.	Schraubengröße SCREW SIZE	Gesamtlänge OVERALL LENGTH	Körperdurchmesser BODY DIAMETER
TS212-8A	8	1.1/4" (31,8 mm)	
TS212-10A	10	1.1/4" (31,8 mm)	
TS212-1/4A	1/4	1.1/4" (31,8 mm)	
TS212-5/16A	5/16	1.1/4" (31,8 mm)	
TS212-3/8A	3/8	1.1/4" (31,8 mm)	

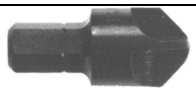

5/16" HEX SHANK

TORQ-SET INSERT BITS
BULLNOSE

Artikel Nr. PART NO.	Schraubengröße SCREW SIZE	Gesamtlänge OVERALL LENGTH	Körperdurchmesser BODY DIAMETER
TS212-5/16AB	5/16	1.1/4" (31,8 mm)	

Andere Abmessungen auf Anfrage / OTHER DIMENSIONS ON REQUEST



1/4" HEX SHANK

ACR - TORQ-SET INSERT BITS
WITH REMOVAL-RIPS

Artikel Nr. PART NO.	**Schraubengröße** SCREW SIZE	**Gesamtlänge** OVERALL LENGTH	**Körperdurchmesser** BODY DIAMETER
TS212-6R	**6**	**1"** (25,4 mm)	
TS212-8R	**8**	**1"** (25,4 mm)	
TS212-10R	**10**	**1"** (25,4 mm)	
TS212-1/4R	**1/4**	**1"** (25,4 mm)	

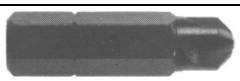

5/16" HEX SHANK

ACR - TORQ-SET INSERT BITS
WITH REMOVAL-RIPS

Artikel Nr. PART NO.	**Schraubengröße** SCREW SIZE	**Gesamtlänge** OVERALL LENGTH	**Körperdurchmesser** BODY DIAMETER
TS212-8AR	**8**	**1.1/4"** (31,8 mm)	
TS212-10AR	**10**	**1.1/4"** (31,8 mm)	
TS212-1/4AR	**1/4**	**1.1/4"** (31,8 mm)	
TS212-5/16AR	**5/16**	**1.1/4"** (31,8 mm)	

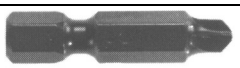

1/4" HEX SHANK

TORQ-SET POWER BITS

Artikel Nr. PART NO.	**Schraubengröße** SCREW SIZE	**Gesamtlänge** OVERALL LENGTH	**Körperdurchmesser** BODY DIAMETER
TS170-0	**0**	**1.1/4"** (31,8 mm)	
TS170-1	**1**	**1.1/4"** (31,8 mm)	
TS170-2	**2**	**1.1/4"** (31,8 mm)	
TS170-3	**3**	**1.1/4"** (31,8 mm)	
TS170-4	**4**	**1.1/4"** (31,8 mm)	
TS170-5	**5**	**1.1/4"** (31,8 mm)	
TS170-6	**6**	**1.1/4"** (31,8 mm)	
TS170-8	**8**	**1.1/4"** (31,8 mm)	
TS170-10	**10**	**1.1/4"** (31,8 mm)	

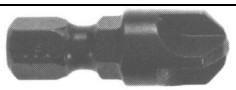

1/4" HEX SHANK

TORQ-SET POWER BITS
BULLNOSE

Artikel Nr. PART NO.	**Schraubengröße** SCREW SIZE	**Gesamtlänge** OVERALL LENGTH	**Körperdurchmesser** BODY DIAMETER
TS170-1/4B	**1/4**	**1.1/4"** (31,8 mm)	
TS170-5/16B	**5/16**	**1.1/4"** (31,8 mm)	
TS170-3/8B	**3/8**	**1.1/4"** (31,8 mm)	

Andere Abmessungen auf Anfrage / OTHER DIMENSIONS ON REQUEST



1/4" HEX SHANK

TORQ-SET POWER BITS

Artikel Nr. PART NO.	**Schraubengröße** SCREW SIZE	**Gesamtlänge** OVERALL LENGTH	**Körperdurchmesser** BODY DIAMETER
TS273-0	**0**	**1.15/16"** (49,2 mm)	**1/8"** (3,18 mm)
TS273-1	**1**	**1.15/16"** (49,2 mm)	**1/8"** (3,18 mm)
TS273-2	**2**	**1.15/16"** (49,2 mm)	**1/8"** (3,18 mm)
TS273-3	**3**	**1.15/16"** (49,2 mm)	**5/32"** (3,97 mm)
TS273-4	**4**	**1.15/16"** (49,2 mm)	**5/32"** (3,97 mm)
TS273-5	**5**	**1.15/16"** (49,2 mm)	**3/16"** (4,76 mm)
TS273-6	**6**	**1.15/16"** (49,2 mm)	**3/16"** (4,76 mm)
TS273-8	**8**	**1.15/16"** (49,2 mm)	**1/4"** (6,35 mm)
TS273-10	**10**	**1.15/16"** (49,2 mm)	**1/4"** (6,35 mm)

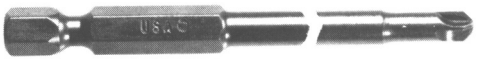

1/4" HEX SHANK

TORQ-SET POWER BITS

Artikel Nr. PART NO.	**Schraubengröße** SCREW SIZE	**Gesamtlänge** OVERALL LENGTH	**Körperdurchmesser** BODY DIAMETER
TS265-0-35	**0**	**3.1/2"** (88,9 mm)	**1/8"** (3,18 mm)
TS265-1-35	**1**	**3.1/2"** (88,9 mm)	**1/8"** (3,18 mm)
TS265-2-35	**2**	**3.1/2"** (88,9 mm)	**1/8"** (3,18 mm)
TS265-3-35	**3**	**3.1/2"** (88,9 mm)	**5/32"** (3,97 mm)
TS265-4-35	**4**	**3.1/2"** (88,9 mm)	**5/32"** (3,97 mm)
TS265-5-35	**5**	**3.1/2"** (88,9 mm)	**3/16"** (4,76 mm)
TS265-6-35	**6**	**3.1/2"** (88,9 mm)	**3/16"** (4,76 mm)
TS265-8-35	**8**	**3.1/2"** (88,9 mm)	**1/4"** (6,35 mm)
TS265-10-35	**10**	**3.1/2"** (88,9 mm)	**1/4"** (6,35 mm)

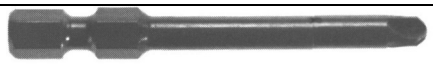

1/4" HEX SHANK

TORQ-SET POWER BITS

Artikel Nr. PART NO.	**Schraubengröße** SCREW SIZE	**Gesamtlänge** OVERALL LENGTH	**Körperdurchmesser** BODY DIAMETER
TS265-0-6	**0**	**6"** (152,4 mm)	**1/8"** (3,18 mm)
TS265-1-6	**1**	**6"** (152,4 mm)	**1/8"** (3,18 mm)
TS265-2-6	**2**	**6"** (152,4 mm)	**1/8"** (3,18 mm)
TS265-3-6	**3**	**6"** (152,4 mm)	**5/32"** (3,97 mm)
TS265-4-6	**4**	**6"** (152,4 mm)	**5/32"** (3,97 mm)
TS265-5-6	**5**	**6"** (152,4 mm)	**3/16"** (4,76 mm)
TS265-6-6	**6**	**6"** (152,4 mm)	**3/16"** (4,76 mm)
TS265-8-6	**8**	**6"** (152,4 mm)	**1/4"** (6,35 mm)
TS265-10-6	**10**	**6"** (152,4 mm)	**1/4"** (6,35 mm)

Andere Abmessungen auf Anfrage / OTHER DIMENSIONS ON REQUEST

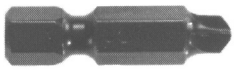

5/16" HEX SHANK

TORQ-SET POWER BITS

Artikel Nr. PART NO.	Schraubengröße SCREW SIZE	Gesamtlänge OVERALL LENGTH	Körperdurchmesser BODY DIAMETER
TS170-8A	8	1.1/4" (31,8 mm)	
TS170-10A	10	1.1/4" (31,8 mm)	



5/16" HEX SHANK

TORQ-SET POWER BITS
BULLNOSE

Artikel Nr. PART NO.	Schraubengröße SCREW SIZE	Gesamtlänge OVERALL LENGTH	Körperdurchmesser BODY DIAMETER
TS170-1/4A	1/4	1.1/4" (31,8 mm)	
TS170-5/16A	5/16	1.1/4" (31,8 mm)	
TS170-3/8A	3/8	1.1/4" (31,8 mm)	
TS170-7/16A	7/16	1.1/4" (31,8 mm)	
TS170-1/2A	1/2	1.1/4" (31,8 mm)	

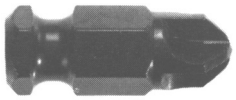

7/16" HEX SHANK

TORQ-SET POWER BITS

Artikel Nr. PART NO.	Schraubengröße SCREW SIZE	Gesamtlänge OVERALL LENGTH	Körperdurchmesser BODY DIAMETER
TS170-1/4	1/4	1.1/4" (31,8 mm)	
TS170-5/16	5/16	1.1/4" (31,8 mm)	
TS170-3/8	3/8	1.1/4" (31,8 mm)	
TS170-7/16	7/16	1.1/4" (31,8 mm)	



7/16" HEX SHANK

TORQ-SET POWER BITS

Artikel Nr. PART NO.	Schraubengröße SCREW SIZE	Gesamtlänge OVERALL LENGTH	Körperdurchmesser BODY DIAMETER
TS273-1/4	1/4	1.15/16" (49,2 mm)	11/32" (8,73 mm)
TS273-5/16	5/16	1.15/16" (49,2 mm)	3/8" (9,53 mm)
TS273-3/8	3/8	1.15/16" (49,2 mm)	7/16" (11,11 mm)
TS273-7/16	7/16	1.15/16" (49,2 mm)	7/16" (11,11 mm)

Andere Abmessungen auf Anfrage / OTHER DIMENSIONS ON REQUEST



7/16" HEX SHANK

TORQ-SET POWER BITS

Artikel Nr. PART NO.	**Schraubengröße** SCREW SIZE	**Gesamtlänge** OVERALL LENGTH	**Körperdurchmesser** BODY DIAMETER
TS265-1/4-35	**1/4**	**3.1/2"** (88,9 mm)	**11/32"** (8,73 mm)
TS265-5/16-35	**5/16**	**3.1/2"** (88,9 mm)	**3/8"** (9,53 mm)
TS265-3/8-35	**3/8**	**3.1/2"** (88,9 mm)	**7/16"** (11,11 mm)
TS265-7/16-35	**7/16**	**3.1/2"** (88,9 mm)	**7/16"** (11,11 mm)



7/16" HEX SHANK

TORQ-SET POWER BITS

Artikel Nr. PART NO.	**Schraubengröße** SCREW SIZE	**Gesamtlänge** OVERALL LENGTH	**Körperdurchmesser** BODY DIAMETER
TS265-1/4-6	**1/4**	**6"** (152,4 mm)	**11/32"** (8,73 mm)
TS265-5/16-6	**5/16**	**6"** (152,4 mm)	**3/8"** (9,53 mm)
TS265-3/8-6	**3/8**	**6"** (152,4 mm)	**7/16"** (11,11 mm)
TS265-7/16-6	**7/16**	**6"** (152,4 mm)	**7/16"** (11,11 mm)

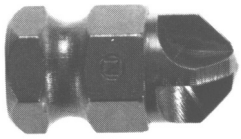

5/8" HEX SHANK

TORQ-SET POWER BITS

Artikel Nr. PART NO.	**Schraubengröße** SCREW SIZE	**Gesamtlänge** OVERALL LENGTH	**Körperdurchmesser** BODY DIAMETER
TS170-1/2	**1/2**	**1.1/4"** (31,8 mm)	
TS170-9/16	**9/16**	**1.1/4"** (31,8 mm)	
TS170-5/8	**5/8**	**1.1/4"** (31,8 mm)	

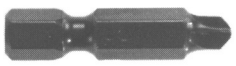

1/4" HEX SHANK

ACR - TORQ-SET POWER BITS
WITH REMOVAL-RIPS

Artikel Nr. PART NO.	**Schraubengröße** SCREW SIZE	**Gesamtlänge** OVERALL LENGTH	**Körperdurchmesser** BODY DIAMETER
TS170-6R	**6**	**1.1/4"** (31,8 mm)	
TS170-8R	**8**	**1.1/4"** (31,8 mm)	
TS170-10R	**10**	**1.1/4"** (31,8 mm)	

Andere Abmessungen auf Anfrage / OTHER DIMENSIONS ON REQUEST



1/4" HEX SHANK

ACR - TORQ-SET POWER BITS
WITH REMOVAL-RIPS

Artikel Nr. PART NO.	**Schraubengröße** SCREW SIZE	**Gesamtlänge** OVERALL LENGTH	**Körperdurchmesser** BODY DIAMETER
TS273-6R	**6**	**1.15/16"** (49,2 mm)	**3/16"** (4,76 mm)
TS273-8R	**8**	**1.15/16"** (49,2 mm)	**1/4"** (6,35 mm)
TS273-10R	**10**	**1.15/16"** (49,2 mm)	**1/4"** (6,35 mm)



1/4" HEX SHANK

ACR - TORQ-SET POWER BITS
WITH REMOVAL-RIPS

Artikel Nr. PART NO.	**Schraubengröße** SCREW SIZE	**Gesamtlänge** OVERALL LENGTH	**Körperdurchmesser** BODY DIAMETER
TS265-6-35R	**6**	**3.1/2"** (88,9 mm)	**3/16"** (4,76 mm)
TS265-8-35R	**8**	**3.1/2"** (88,9 mm)	**1/4"** (6,35 mm)
TS265-10-35R	**10**	**3.1/2"** (88,9 mm)	**1/4"** (6,35 mm)



5/16" HEX SHANK

ACR - TORQ-SET POWER BITS
WITH REMOVAL-RIPS / BULLNOSE

Artikel Nr. PART NO.	**Schraubengröße** SCREW SIZE	**Gesamtlänge** OVERALL LENGTH	**Körperdurchmesser** BODY DIAMETER
TS170-1/4AR	**1/4**	**1.1/4"** (31,8 mm)	
TS170-5/16AR	**5/16**	**1.1/4"** (31,8 mm)	

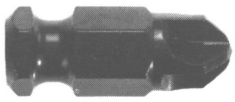

7/16" HEX SHANK

ACR - TORQ-SET POWER BITS
WITH REMOVAL-RIPS

Artikel Nr. PART NO.	**Schraubengröße** SCREW SIZE	**Gesamtlänge** OVERALL LENGTH	**Körperdurchmesser** BODY DIAMETER
TS170-1/4R	**1/4**	**1.1/4"** (31,8 mm)	
TS170-5/16R	**5/16**	**1.1/4"** (31,8 mm)	

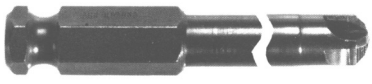

7/16" HEX SHANK

ACR - TORQ-SET POWER BITS
WITH REMOVAL-RIPS

Artikel Nr. PART NO.	**Schraubengröße** SCREW SIZE	**Gesamtlänge** OVERALL LENGTH	**Körperdurchmesser** BODY DIAMETER
TS265-1/4-35R	**1/4**	**3.1/2"** (88,9 mm)	**11/32"** (8,73 mm)
TS265-5/16-35R	**5/16**	**3.1/2"** (88,9 mm)	**3/8"** (9,53 mm)

Andere Abmessungen auf Anfrage / OTHER DIMENSIONS ON REQUEST

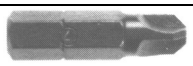

1/4" HEX SHANK

TRI-WING INSERT BITS

Artikel Nr. PART NO.	Größe RECESS NO.	Gesamtlänge OVERALL LENGTH	Schraubengröße / SCREW SIZE	
			TENSION HEAD	SHEAR HEAD
TW-0D	0	1" (25,4 mm)	0-80	-------
TW-1D	1	1" (25,4 mm)	2-56	4-40
TW-2D	2	1" (25,4 mm)	4-40	6-32
TW-3D	3	1" (25,4 mm)	6-32	8-32
TW-4D	4	1" (25,4 mm)	8-32	10-32
TW-5D	5	1" (25,4 mm)	10-32	1/4-28

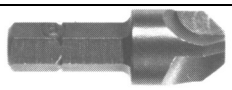

1/4" HEX SHANK

TRI-WING INSERT BITS
BULLNOSE

Artikel Nr. PART NO.	Größe RECESS NO.	Gesamtlänge OVERALL LENGTH	Schraubengröße / SCREW SIZE	
			TENSION HEAD	SHEAR HEAD
TW-6B4D	6	1.1/4" (31,8 mm)	1/4-28	5/16-24
TW-7B4D	7	1.1/4" (31,8 mm)	5/16-24	3/8-24
TW-8B4D	8	1.1/4" (31,8 mm)	3/8-24	7/16-20

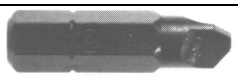

5/16" HEX SHANK

TRI-WING INSERT BITS

Artikel Nr. PART NO.	Größe RECESS NO.	Gesamtlänge OVERALL LENGTH	Schraubengröße / SCREW SIZE	
			TENSION HEAD	SHEAR HEAD
TW-4AD	4	1.1/4" (31,8 mm)	8-32	10-32
TW-5AD	5	1.1/4" (31,8 mm)	10-32	1/4-28
TW-6AD	6	1.1/4" (31,8 mm)	1/4-28	5/16-24

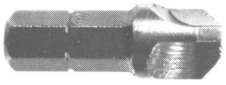

5/16" HEX SHANK

TRI-WING INSERT BITS
BULLNOSE

Artikel Nr. PART NO.	Größe RECESS NO.	Gesamtlänge OVERALL LENGTH	Schraubengröße / SCREW SIZE	
			TENSION HEAD	SHEAR HEAD
TW-6B5D	6	1.1/4" (31,8 mm)	1/4-28	5/16-24
TW-7B5D	7	1.1/4" (31,8 mm)	5/16-24	3/8-24
TW-8B5D	8	1.1/4" (31,8 mm)	3/8-24	7/16-20

Andere Abmessungen auf Anfrage / OTHER DIMENSIONS ON REQUEST

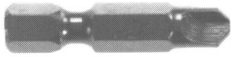

1/4" HEX SHANK

TRI-WING POWER BITS

Artikel Nr. PART NO.	Größe RECESS NO.	Gesamtlänge OVERALL LENGTH	Schraubengröße / SCREW SIZE	
			TENSION HEAD	SHEAR HEAD
TW-0	0	1.1/4" (31,8 mm)	0-80	-------
TW-1	1	1.1/4" (31,8 mm)	2-56	4-40
TW-2	2	1.1/4" (31,8 mm)	4-40	6-32
TW-3	3	1.1/4" (31,8 mm)	6-32	8-32
TW-4	4	1.1/4" (31,8 mm)	8-32	10-32
TW-5	5	1.1/4" (31,8 mm)	10-32	1/4-28



1/4" HEX SHANK

TRI-WING POWER BITS
BULLNOSE

Artikel Nr. PART NO.	Größe RECESS NO.	Gesamtlänge OVERALL LENGTH	Schraubengröße / SCREW SIZE	
			TENSION HEAD	SHEAR HEAD
TW-6B4	6	1.1/4" (31,8 mm)	1/4-28	5/16-24
TW-7B4	7	1.1/4" (31,8 mm)	5/16-24	3/8-24
TW-8B4	8	1.1/4" (31,8 mm)	3/8-24	7/16-20



5/16" HEX SHANK

TRI-WING POWER BITS

Artikel Nr. PART NO.	Größe RECESS NO.	Gesamtlänge OVERALL LENGTH	Schraubengröße / SCREW SIZE	
			TENSION HEAD	SHEAR HEAD
TW-4A	4	1.1/4" (31,8 mm)	8-32	10-32
TW-5A	5	1.1/4" (31,8 mm)	10-32	1/4-28



5/16" HEX SHANK

TRI-WING POWER BITS
BULLNOSE

Artikel Nr. PART NO.	Größe RECESS NO.	Gesamtlänge OVERALL LENGTH	Schraubengröße / SCREW SIZE	
			TENSION HEAD	SHEAR HEAD
TW-6B5	6	1.1/4" (31,8 mm)	1/4-28	5/16-24
TW-7B5	7	1.1/4" (31,8 mm)	5/16-24	3/8-24
TW-8B5	8	1.1/4" (31,8 mm)	3/8-24	7/16-20

Andere Abmessungen auf Anfrage / OTHER DIMENSIONS ON REQUEST

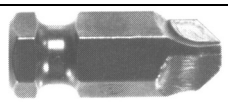

7/16" HEX SHANK

TRI-WING POWER BITS

Artikel Nr. PART NO.	Größe RECESS NO.	Gesamtlänge OVERALL LENGTH	Schraubengröße / SCREW SIZE	
			TENSION HEAD	SHEAR HEAD
TW-6	6	1.1/4" (31,8 mm)	1/4-28	5/16-24
TW-7	7	1.1/4" (31,8 mm)	5/16-24	3/8-24
TW-8	8	1.1/4" (31,8 mm)	3/8-24	7/16-20

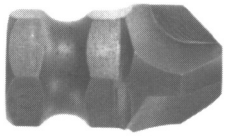

7/16" HEX SHANK

TRI-WING POWER BITS
BULLNOSE

Artikel Nr. PART NO.	Größe RECESS NO.	Gesamtlänge OVERALL LENGTH	Schraubengröße / SCREW SIZE	
			TENSION HEAD	SHEAR HEAD
TW-9B	9	1.1/4" (31,8 mm)	7/16-20	1/2-20

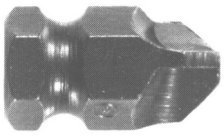

5/8" HEX SHANK

TRI-WING POWER BITS

Artikel Nr. PART NO.	Größe RECESS NO.	Gesamtlänge OVERALL LENGTH	Schraubengröße / SCREW SIZE	
			TENSION HEAD	SHEAR HEAD
TW-9	9	1.1/4" (31,8 mm)	7/16-20	1/2-20
TW-10	10	1.1/4" (31,8 mm)	1/2-20	9/16-18
TW-11	11	1.1/4" (31,8 mm)	9/16-18	5/8-18

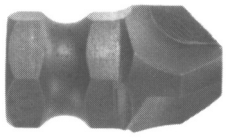

5/8" HEX SHANK

TRI-WING POWER BITS
BULLNOSE

Artikel Nr. PART NO.	Größe RECESS NO.	Gesamtlänge OVERALL LENGTH	Schraubengröße / SCREW SIZE	
			TENSION HEAD	SHEAR HEAD
TW-12B	12	1.1/4" (31,8 mm)	5/8-18	3/4-16
TW-13B	13	2.1/2" (63,5 mm)	3/4-16	7/8-14



3/4" HEX SHANK

TRI-WING POWER BITS
BULLNOSE

Artikel Nr. PART NO.	Größe RECESS NO.	Gesamtlänge OVERALL LENGTH	Schraubengröße / SCREW SIZE	
			TENSION HEAD	SHEAR HEAD
TW-14B	14	3" (76,2 mm)	7/8-14	1-12
TW-15B	15	3" (76,2 mm)	1-12	

Andere Abmessungen auf Anfrage / OTHER DIMENSIONS ON REQUEST

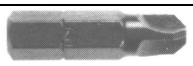

1/4" HEX SHANK

ACR - TRI-WING INSERT BITS
WITH REMOVAL-RIPS

Artikel Nr. PART NO.	Größe RECESS NO.	Gesamtlänge OVERALL LENGTH	Schraubengröße / SCREW SIZE	
			TENSION HEAD	SHEAR HEAD
TW-3DR	3	1" (25,4 mm)	6-32	8-32
TW-4DR	4	1" (25,4 mm)	8-32	10-32
TW-5DR	5	1" (25,4 mm)	10-32	1/4-28

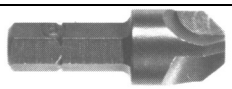

1/4" HEX SHANK

ACR - TRI-WING INSERT BITS
WITH REMOVAL-RIPS / BULLNOSE

Artikel Nr. PART NO.	Größe RECESS NO.	Gesamtlänge OVERALL LENGTH	Schraubengröße / SCREW SIZE	
			TENSION HEAD	SHEAR HEAD
TW-6B4DR	6	1.1/4" (31,8 mm)	1/4-28	5/16-24

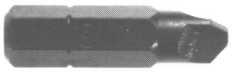

5/16" HEX SHANK

ACR - TRI-WING INSERT BITS
WITH REMOVAL-RIPS

Artikel Nr. PART NO.	Größe RECESS NO.	Gesamtlänge OVERALL LENGTH	Schraubengröße / SCREW SIZE	
			TENSION HEAD	SHEAR HEAD
TW-4ADR	4	1.1/4" (31,8 mm)	8-32	10-32
TW-5ADR	5	1.1/4" (31,8 mm)	10-32	1/4-28
TW-6ADR	6	1.1/4" (31,8 mm)	1/4-28	5/16-24



1/4" HEX SHANK

ACR - TRI-WING POWER BITS
WITH REMOVAL-RIPS

Artikel Nr. PART NO.	Größe RECESS NO.	Gesamtlänge OVERALL LENGTH	Schraubengröße / SCREW SIZE	
			TENSION HEAD	SHEAR HEAD
TW-3R	3	1.1/4" (31,8 mm)	6-32	8-32
TW-4R	4	1.1/4" (31,8 mm)	8-32	10-32
TW-5R	5	1.1/4" (31,8 mm)	10-32	1/4-28



1/4" HEX SHANK

ACR - TRI-WING POWER BITS
WITH REMOVAL-RIPS / BULLNOSE

Artikel Nr. PART NO.	Größe RECESS NO.	Gesamtlänge OVERALL LENGTH	Schraubengröße / SCREW SIZE	
			TENSION HEAD	SHEAR HEAD
TW-6B4R	6	1.1/4" (31,8 mm)	1/4-28	5/16-24

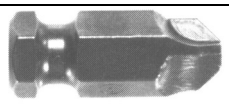

7/16" HEX SHANK

TRI-WING POWER BITS
WITH REMOVAL-RIPS

Artikel Nr. PART NO.	Größe RECESS NO.	Gesamtlänge OVERALL LENGTH	Schraubengröße / SCREW SIZE	
			TENSION HEAD	SHEAR HEAD
TW-6R	6	1.1/4" (31,8 mm)	1/4-28	5/16-24
TW-7R	7	1.1/4" (31,8 mm)	5/16-24	3/8-24

Andere Abmessungen auf Anfrage / OTHER DIMENSIONS ON REQUEST

INSERT BIT HOLDERS
HEX SHANK TO FEMALE HEX

MAGNETIC HOLDER RETAINING RING DETAIL

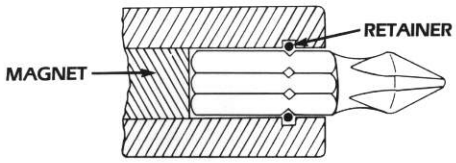

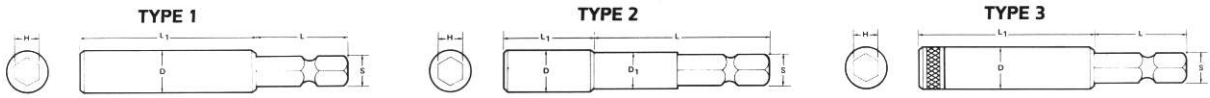

	ZEPHYR PART NO.	S HEX	H	D	D_1	L	L_1
magnetic type 1	ZM10	1/4"	1/4"	7/16"	—	1"	1 7/8"
	ZM18	7/16"	1/4"	1/2"	—	1 1/4"	1 7/8"
	ZM19	5/16"	1/4"	7/16"	—	1 1/8"	1 7/8"
	ZM20	5/16"	5/16"	1/2"	—	1 1/8"	1 31/32"
	ZM28	7/16"	5/16"	9/16"	—	1 5/16"	2 1/16"
	ZM39	1/4"	1/4"	7/16"	—	1"	1 1/4"
	ZM47	1/4"	5/16"	1/2"	—	1 1/16"	2 1/8"
	ZM59	1/4"	1/4"	3/8"	—	1"	1 7/8"
magnetic type 2	ZM10-L 4	1/4"	1/4"	7/16"	5/16"	2 1/8"	1 7/8"
	ZM10-L 6	1/4"	1/4"	7/16"	5/16"	4 1/8"	1 7/8"
	ZM10-L 8	1/4"	1/4"	7/16"	5/16"	6 1/8"	1 7/8"
	ZM10-L 10	1/4"	1/4"	7/16"	5/16"	8 1/8"	1 7/8"
	ZM35	1/4"	1/4"	7/16"	3/8"	1"	1 7/8"
	ZM38	1/4"	1/4"	7/16"	3/8"	1 1/8"	1 7/8"
magnetic type 3	ZM60	1/4"	1/4"	7/16"	—	1"	2 3/32"
	ZM61	1/4"	1/4"	7/16"	3/8"	1"	2 3/32"
	ZM62	1/4"	1/4"	7/16"	—	1"	1 1/4"
non-magnetic type 1	ZNM18	7/16"	1/4"	1/2"	7/16"	1 1/4"	1 1/2"
	ZNM19	5/16"	1/4"	7/16"	—	1 1/8"	3/4"
	ZNM20	5/16"	5/16"	1/2"	—	1 1/8"	1 3/8"
	ZNM28	7/16"	5/16"	9/16"	—	1 1/4"	1 1/2"
non-magnetic type 2	ZNM10	1/4"	1/4"	7/16"	9/32"	1 1/8"	5/8"
	ZNM10L4	1/4"	1/4"	7/16"	5/16"	3"	1"
	ZNM10L6	1/4"	1/4"	7/16"	5/16"	5"	1"

INSERT BIT HOLDERS
THREADED DRIVE TO FEMALE HEX

	ZEPHYR PART NO.	T	H	D	OVERALL LENGTH	TYPE
magnetic	ZM45	3/8-24 R.H.	1/4"	3/8"	1 7/8"	Replaceable Cap
	ZM41	3/8-24 R.H.	1/4"	3/8"	1 7/8"	Solid Body

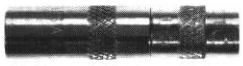

INSERT BIT HOLDERS
FEMALE SQUARE DRIVE TO FEMALE HEX OR SQUARE

TYPE A

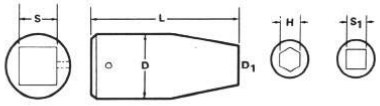

TAPERED

TYPE B

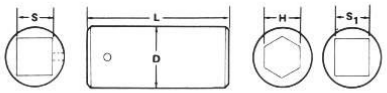

STRAIGHT

TYPE C

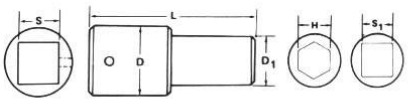

SHOULDER

ZEPHYR PART NO.	DRIVE S	SQUARE S_1	HEX H	D	D_1	L	
ZNM25	3/8" SQ.	—	1/4"	11/16"	—	1 1/4"	**non-magnetic type A**
ZNM26	3/8" SQ.	—	5/16"	11/16"	—	1 1/2"	
ZNM27	1/2" SQ.	—	5/16"	15/16"	—	1 1/2"	
ZNM33	3/8" SQ.	5/16"	—	11/16"	5/8"	1 1/2"	
ZNM34	1/2" SQ.	5/16"	—	1"	5/8"	1 3/4"	
ZNM37	1/2" SQ.	—	1/4"	15/16"	—	1 1/2"	
ZNM23	1/4"	—	1/4"	7/16"	—	7/8"	**non-magnetic type B**
ZM23	1/4" SQ.	—	1/4"	9/16"	7/16"	2 1/16"	**magnetic type C**
ZM25	3/8" SQ.	—	1/4"	11/16"	7/16"	2 1/16"	
ZM26	3/8" SQ.	—	5/16"	11/16"	1/2"	2 3/4"	
ZM37	1/2" SQ.	—	1/4"	15/16"	7/16"	2 3/4"	



INSERT BIT HOLDERS
YANKEE DRIVE TO FEMALE HEX

ZEPHYR PART NO.	S	H	D	L_1	L	
ZM21	9/32"	1/4"	7/16"	1 7/8"	1 1/2"	**magnetic**
ZM22	5/16"	1/4"	7/16"	1 7/8"	1 1/2"	
ZM30	7/32"	1/4"	7/16"	1 7/8"	1 1/2"	



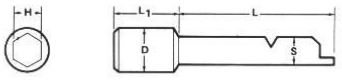

ZNM21	9/32"	1/4"	7/16"	3/4"	1 1/2"	**non-magnetic**
ZNM22	5/16"	1/4"	7/16"	3/4"	1 1/2"	
ZNM30	7/32"	1/4"	7/16"	3/4"	1 1/2"	



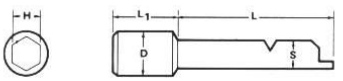

NUT SETTERS
HEX SHANK DRIVE TO FEMALE HEX

TYPE 1

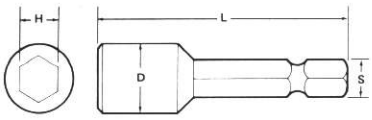

TYPE 2

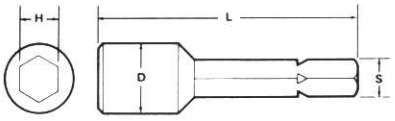

	ZEPHYR PART NO.	S HEX	H	D	L
magnetic type 1 power	Z10MSH-1/4	1/4"	1/4"	7/16"	1 11/16"
	Z10MSH-5/16	1/4"	5/16"	1/2"	1 11/16"
	Z10MSH-3/8	1/4"	3/8"	9/16"	1 11/16"
	Z10MSHL-1/4	1/4"	1/4"	7/16"	2 9/16"
	Z10MSHL-5/16	1/4"	5/16"	1/2"	2 9/16"
	Z10MSHL-3/8	1/4"	3/8"	9/16"	2 9/16"
magnetic type 2 insert	Z10MSHS-1/4	1/4"	1/4"	7/16"	1 1/8"
	Z10MSHS-5/16	1/4"	5/16"	1/2"	1 1/8"
	Z10MSHS-3/8	1/4"	3/8"	1/2"	1 1/8"
non-magnetic type 1 power	Z10SH-1/4	1/4"	1/4"	7/16"	1 11/16"
	Z10SH-5/16	1/4"	5/16"	1/2"	1 11/16"
	Z10SH-3/8	1/4"	3/8"	9/16"	1 11/16"
	Z10SHL-1/4	1/4"	1/4"	7/16"	2 9/16"
	Z10SHL-5/16	1/4"	5/16"	1/2"	2 9/16"
	Z10SHL-3/8	1/4"	3/8"	9/16"	2 9/16"

SQUARE DRIVE SOCKETS
FOR HEX HEAD SCREWS OR NUTS

TYPE A

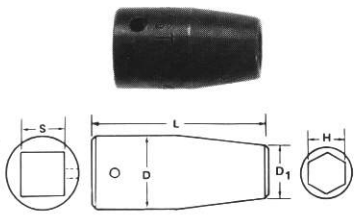

TAPERED

TYPE B

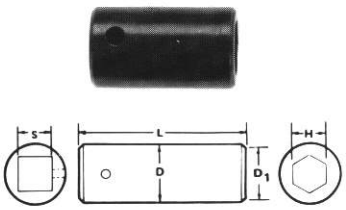

STRAIGHT

TYPE C

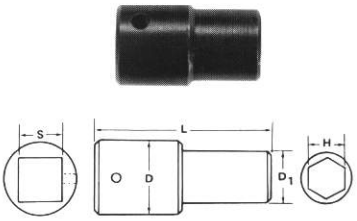

SHOULDER

1/4" SQUARE DRIVE SOCKETS

ZEPHYR PART NO.	H	D	D_1	L	S	TYPE	
Z48MST-1/4	1/4"	1/2"	3/8"	7/8"	1/4"	A	**magnetic**
Z48MS-1/4	1/4"	1/2"	7/16"	7/8"	1/4"	C	
Z48MS-5/16	5/16"	1/2"	1/2"	7/8"	1/4"	B	
Z48MST-5/16	5/16"	1/2"	7/16"	7/8"	1/4"	A	
Z48MS-3/8	3/8"	9/16"	9/16"	1"	1/4"	B	
Z48MS-7/16	7/16"	3/4"	3/4"	1"	1/4"	B	
Z48S-1/4	1/4"	1/2"	7/16"	7/8"	1/4"	C	**non-magnetic**
Z48ST-1/4	1/4"	1/2"	3/8"	7/8"	1/4"	A	
Z48S-5/16	5/16"	1/2"	1/2"	7/8"	1/4"	B	
Z48S-3/8	3/8"	9/16"	9/16"	1"	1/4"	B	
Z48S-7/16	7/16"	3/4"	3/4"	1"	1/4"	B	
Z48STD-1/4	1/4"	1/2"	3/8"	7/8"	1/4"	A	**double hex**

EXTENSIONS
HEX SHANK DRIVE TO MALE SQUARE

1/4" hex to 1/4" square



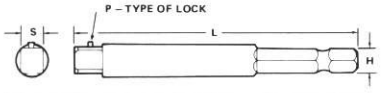

ZEPHYR PART NO.	S	H	L	P
Z10SH- 1 3/8	1/4"	1/4"	1 3/8"	PIN
Z10SH- 2	1/4"	1/4"	2"	PIN
Z10SH- 3	1/4"	1/4"	3"	PIN
Z10SH- 4	1/4"	1/4"	4"	PIN
Z10SH- 5	1/4"	1/4"	5"	PIN
Z10SH- 6	1/4"	1/4"	6"	PIN
Z10SH- 8	1/4"	1/4"	8"	PIN
Z10SH-10	1/4"	1/4"	10"	PIN
Z10SH-12	1/4"	1/4"	12"	PIN

1/4" hex to 3/8" square



Z10SH-3/8-2	3/8"	1/4"	2"	PIN
Z10SH-3/8-3	3/8"	1/4"	3"	PIN
Z10SH-3/8-4	3/8"	1/4"	4"	PIN
Z10SH-3/8-6	3/8"	1/4"	6"	PIN
Z10SH-3/8-8	3/8"	1/4"	8"	PIN

7/16" hex to 3/8" square



Z09SH-3/8	3/8"	7/16"	1 3/4"	PIN
Z09SH-3/8- 2	3/8"	7/16"	2"	PIN
Z09SH-3/8- 3	3/8"	7/16"	3"	PIN
Z09SH-3/8- 4	3/8"	7/16"	4"	PIN
Z09SH-3/8- 5	3/8"	7/16"	5"	PIN
Z09SH-3/8- 6	3/8"	7/16"	6"	PIN
Z09SH-3/8- 8	3/8"	7/16"	8"	PIN
Z09SH-3/8-10	3/8"	7/16"	10"	PIN
Z09SH-3/8-12	3/8"	7/16"	12"	PIN
Z09SH-3/8-15	3/8"	7/16"	15"	PIN

7/16" hex to 1/2" square



Z09SH-1/2	1/2"	7/16"	2 1/8"	PIN
Z09SH-1/2- 3	1/2"	7/16"	3"	PIN
Z09SH-1/2- 4	1/2"	7/16"	4"	PIN
Z09SH-1/2- 5	1/2"	7/16"	5"	PIN
Z09SH-1/2- 6	1/2"	7/16"	6"	PIN
Z09SH-1/2- 8	1/2"	7/16"	8"	PIN

EXTENSIONS
HEX SHANK TO MALE HEX (Reversible Sockets)

1/4" HEX TO 1/4" HEX



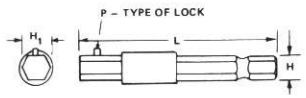

ZEPHYR PART NO.	H	H_1	L	P
Z10SHR-2	1/4"	1/4"	2"	PIN
Z10SHR-3	1/4"	1/4"	3"	PIN
Z10SHR-4	1/4"	1/4"	4"	PIN

HAND BIT HOLDERS
COMBINATION HOLDER WITH BIT STORAGE

BIT SIZE	D	L_1	L_2	SHANK MATERIAL	ZEPHYR PART NO.	
1/4" HEX	3/8"	7 13/16"	3 3/4"	ALUMINUM	H104MA	magnetic
1/4" HEX	3/8"	7 13/16"	3 3/4"	S. STEEL	H104MS	
5/16" HEX	7/16"	7 13/16"	3 3/4"	ALUMINUM	H105MA	
5/16" HEX	7/16"	7 13/16"	3 3/4"	S. STEEL	H105MS	

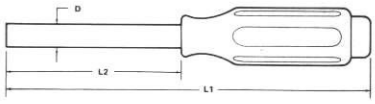

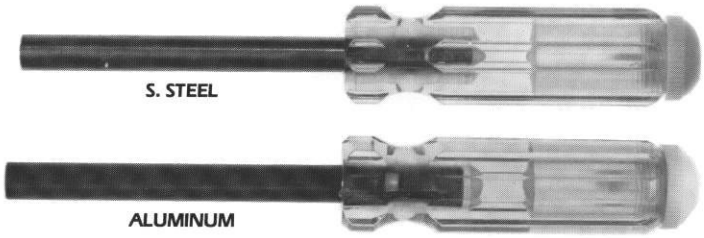

1/4" HEX	7/16"	7 13/16"	3 3/4"	STEEL	H104NM	non-magnetic
5/16" HEX	1/2"	7 13/16"	3 3/4"	STEEL	H105NM	

Note: Bit storage handle will accommodate up to four 1/4" Hex 1" insert bits.

HAND BIT HOLDERS
STUBBY HOLDER WITH SOLID HANDLE

BIT SIZE	D	L_1	L_2	SHANK MATERIAL	ZEPHYR PART NO.	
1/4" HEX	3/8"	3 5/8"	1 5/8"	S. STEEL	SH104M	magnetic

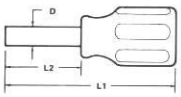



1/4" HEX	7/16"	3 5/8"	1 5/8"	STEEL	SH104NM	non-magnetic

HAND BIT HOLDERS
SOLID HANDLE

BIT SIZE	D	L_1	L_2	SHANK MATERIAL	ZEPHYR PART NO.	
1/4" HEX	3/8"	8 1/4"	3 3/4"	ALUMINUM	H106MA	magnetic
1/4" HEX	3/8"	8 1/4"	3 3/4"	S. STEEL	H106MS	
5/16" HEX	7/16"	8 1/4"	3 3/4"	ALUMINUM	H107MA	
5/16" HEX	7/16"	8 1/4"	3 3/4"	S. STEEL	H107MS	

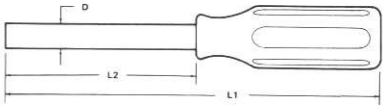

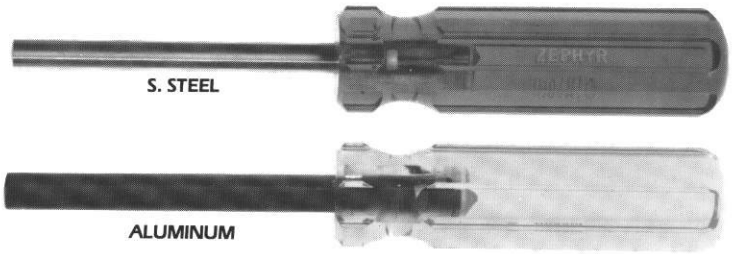

1/4" HEX	7/16"	8 1/4"	3 3/4"	STEEL	H106NM	non-magnetic
5/16" HEX	1/2"	8 1/4"	3 3/4"	STEEL	H107NM	

HAND SCREWDRIVERS
ACR®-PHILLIPS

POINT SIZE	D	L_1	L_2	ZEPHYR PART NO. INSTALLATION	REMOVAL
1	1/4" HEX	7 1/16"	3 1/8"	PL-101-ACR-I	PL-101-ACR-R
2	1/4" HEX	8 1/2"	4"	PL-102-ACR-I	PL-102-ACR-R
3	5/16" HEX	10 1/2"	6"	PL-103-ACR-I	PL-103-ACR-R

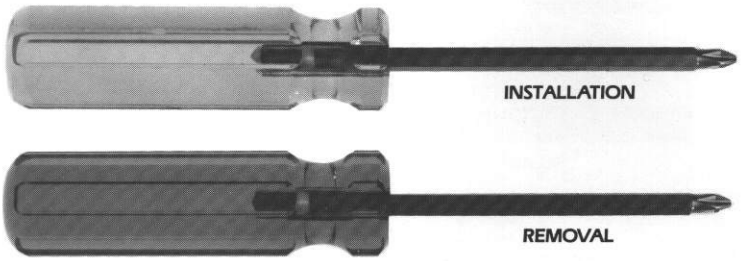

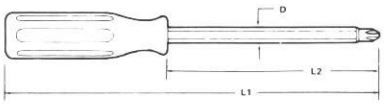

HAND SCREWDRIVERS
TORQ-SET®

POINT SIZE	D	L_1	L_2	ZEPHYR PART NO.
0	1/4" HEX	3"	1-1/4"	TS201P-0
1	1/4" HEX	3"	1-1/4"	TS201P-1
2	1/4" HEX	7 1/16"	3-1/8"	TS201P-2
3	1/4" HEX	7 1/16"	3-1/8"	TS201P-3
4	1/4" HEX	7 1/16"	3-1/8"	TS201P-4
5	1/4" HEX	7 1/16"	3-1/8"	TS201P-5
6	1/4" HEX	7 15/16"	4"	TS201P-6
8	1/4" HEX	7 15/16"	4"	TS201P-8
10	1/4" HEX	7 15/16"	4"	TS201P-10
1/4	5/16" HEX	10 1/2"	6"	TS201P-1/4
5/16	3/8" HEX	12 1/2"	8"	TS201P-5/16
3/8	3/8" HEX	12 1/2"	8"	TS201P-3/8

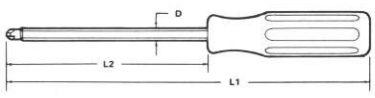



TORQ-SET® is a registered trademark of Phillips Screw Company.

HAND SCREWDRIVERS
TRI-WING®

POINT SIZE	D	L_1	L_2	ZEPHYR PART NO.
0	1/4"	3"	1-1/4"	TW301P-0
1	1/4"	3"	1-1/4"	TW301P-1
2	1/4"	7 1/16"	3-1/8"	TW301P-2
3	1/4"	7 15/16"	4"	TW301P-3
4	1/4"	7 15/16"	4"	TW301P-4
5	1/4"	7 15/16"	4"	TW301P-5
6	3/8"	10 1/2"	6"	TW301P-6
7	3/8"	12 1/2"	8"	TW301P-7

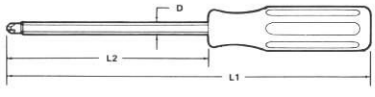

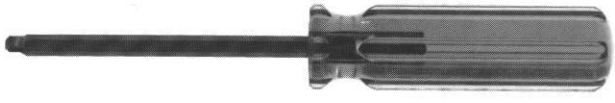

Z-Hex Ball L-WRENCH SET

Helps get to those hard to reach areas and provides
the torque to do the job. The new set includes 12 sizes:

**.050, 1/16", 5/64", 3/32", 7/64", 1/8", 9/64",
5/32", 3/16", 7/32", 1/4" and 5/16"**



ZHBL-1200

Bit-Knarren

BIT-RATCHET

Mit magnetischen Innen-Sechskant-Aufnahmen zum Festhalten der Bits; rechts/links umschaltbar; Knarrenköpfe um 25° abgewinkelt; US-Alloy-Steel, verchromt, poliert:
BIT-RATCHETS WITH MAGNETIC FEMALE-HEX-DRIVE; REVERSIBLE;
25° BENT RATCHET HEADS; US-ALLOY-STEEL, CHROMATED AND POLISHED:

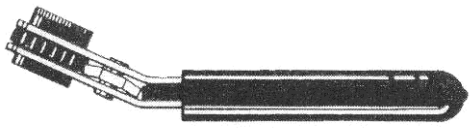

6722-BK

**Mini-Bitknarre, einseitig,
für Bits mit 1/4" Sechskant,
Länge 110 mm, Gewicht 65 g**

MINI-BIT-RATCHET, SINGLE SIDE
FOR BITS WITH 1/4" HEX,
LENGTH 4.3/8", WEIGHT 0.14 LBS.

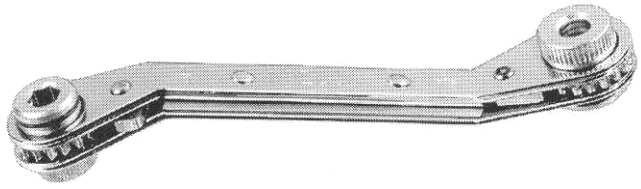

6720

**Combi-Bitknarre,
für Bits mit 1/4" + 5/16" Sechskant
Länge 140 mm, Gewicht 105 g**

COMBI-BIT-RATCHET
FOR BITS WITH 1/4" + 5/16" HEX
LENGTH 5.1/2", WEIGHT 0.23 LBS.

Schrauben-Löser / SCREW REMOVAL TOOL

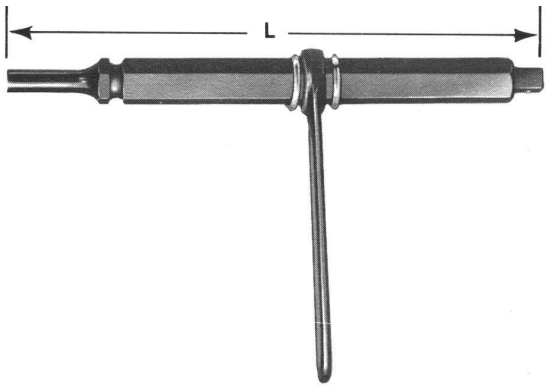

Zum Lösen von Schrauben durch Verwendung mit einem Niethammer

FOR REMOVING SCREWS WITH RIVET HAMMER

Artikel-Nr. PART NO.	**Länge (L)** LENGTH (L)	**Vierkant-Abtrieb** SQUARE DRIVE	**Schaft-Type und Abmessung** SHANK TYPE AND DIAMETER
540	9" **(229 mm)**	3/8" **(9,53 mm)**	PARKER TAPER .401 SHANK **(10,2 mm Standard)**
540S	4.1/2" **(114 mm)**	3/8" **(9,53 mm)**	PARKER TAPER .401 SHANK **(10,2 mm Standard)**

Schraubenausdreher, schwere Ausführung HEAVY DUTY SCREW REMOVAL TOOL

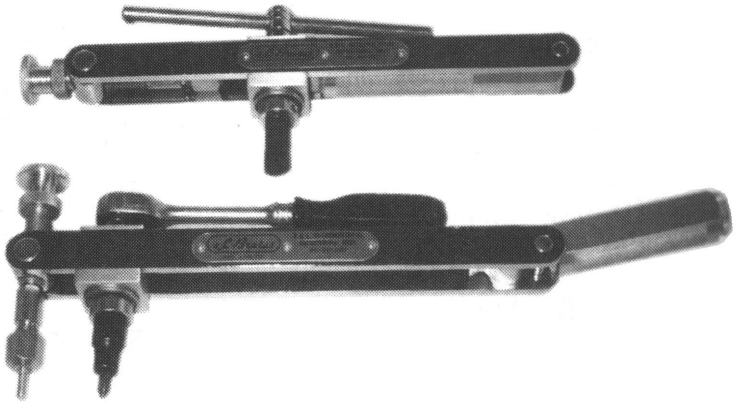

*** T-Griff, Ratsche, Bithalter, Bits & Schraube sind nicht enthalten!**

* T-HANDLE, RATCHET, BITHOLDER BITS & SCREW ARE NOT INCLUDED

Artikel-Nr. / PART NO.	**Beschreibung /** DESCRIPTION
5-2869	**Für Schrauben von 4 mm bis 6,35 mm** FOR SCREWS FROM #8 TO 1/4"
7-2868	**Für Schrauben von 6,35 mm bis 9,53 mm** FOR SCREWS FROM 1/4" TO 3/8"

Schraubenausdreher / SCREW EXTRACTOR



Aus hochwertigem Chrom-Vanadium-Stahl, gehärtet, 54-56 HRc Gewinde gerollt, Schaft geschliffen, zum Entfernen abgebrochener Schrauben, Gewindebolzen und Rohrenden.

Arbeitsweise:
Mit dem Spiralbohrer der empfohlenen Größe zentrisch ein Loch in das zu entfernende Stück bohren, den Schraubenausdreher einsetzen und bis zum Lösen des Reststückes in Linksrichtung drehen.

***1** = maximales Anwenderdrehmoment in Nm bei einem Prüfelement mit einer Material-festigkeit von 1147 N/mm² und einer Härte von 35 HRc. Die Belastung ist stetig steigend, nicht schwingend oder schlagartig, bis zum höchst-zulässigen Drehmoment aufzubringen.

From high-quality chrom vanadium steel, heat treated, 54-56 HRc rolled thread, shank, polished, to remove broken screws, stups and pipes.

Mode of operation:
Drill hole with the recommended twist drill into the stud's center, and turn the extractor into hole counterclockwise until stud removed.

***1** = the maximum torque which should not be exceeded, measured on a screw with a tensile strength of 1147 N/mm² and a hardness of 35 HRc. The torque should be applied with steady pressure and should not be applied suddenly or spasmodic up to the maximum torque.

Art. Nummer Part Number	Schraubengröße Screw Size	Bohrdurchmesser Drilling Diameter	Bohrtiefe Drill Depth	Länge Length	Vierkant Ø Square Ø	***1** Nm
4.501.0	M4	1,8 mm	7 mm	50 mm	2,7 mm	2,2
4.502.0	M5 - M7	3,2 mm	10 mm	57 mm	3,8 mm	10
4.503.0	M8 - M10	4,5 mm	13 mm	64 mm	4,9 mm	23
4.504.0	M11 - M14	6,5 mm	16 mm	71 mm	7,0 mm	70
4.505.0	M16 - M18	8,5 mm	21 mm	79 mm	9,0 mm	150

Reifenprofil-Tiefenmesslehre
TYRE TREAD DEPTH GAUGE

Messbereich / DEPTH RANGE : 0 - 26 mm



TDG16C01

Ventil-Ausdreher
VALVE CORE REMOVAL TOOL





Valve Size: Small

HSL 12344

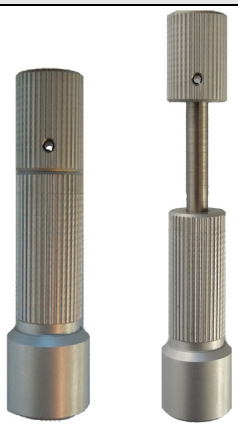



Valve Size: Large

HSL 12345

Aircraft Tyre deflation

Safety is always the prime requirement and with aircraft tyre deflation there are two main risk areas.

Firstly the causing of embolisms and embedding of debris into the skin carried by escaping high pressure gas.

Secondly the subsequent possible damage by the valve being carried away by the exhausting gas and becoming fodder if not found.

Solution: Both problems have been overcome. The exhaust route has been directed away from the operator and secondly the removed valve is retained within the deflator body until the deflator is removed from the valve.

Now that dry nitrogen has replaced air as the inflation medium, ice formation is also no longer a hazard.

Stahl-Lineale - flexibel
STEEL-RULES - FLEXIBLE

verchromt, satiniert / SATIN CHROME FINISH

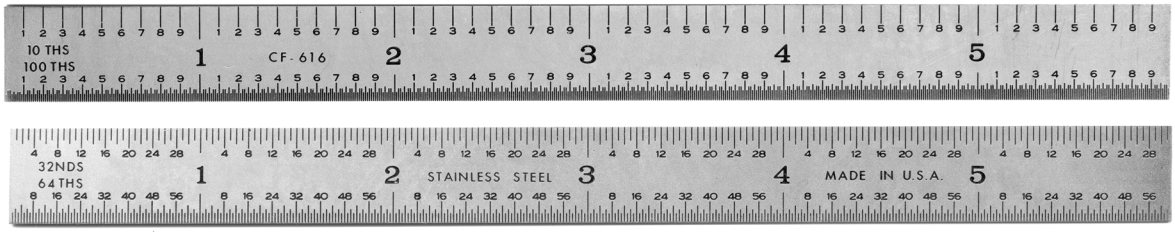

CF-616

Länge	Teilung Seite 1	Teilung Seite 2	Schriftfarbe	Weite
LENGTH	GRADUATION SIDE 1	GRADUATION SIDE 2	LETTER COLOR	Width
6 Zoll	**1/32" + 1/64"**	**1/10" + 1/100"**	**schwarz**	**11,9 mm**
6 INCH	**32nds + 64ths**	**10ths + 100ths**	**black**	**15/32"**

Inspektions-Spiegel / INSPECTION MIRRORS

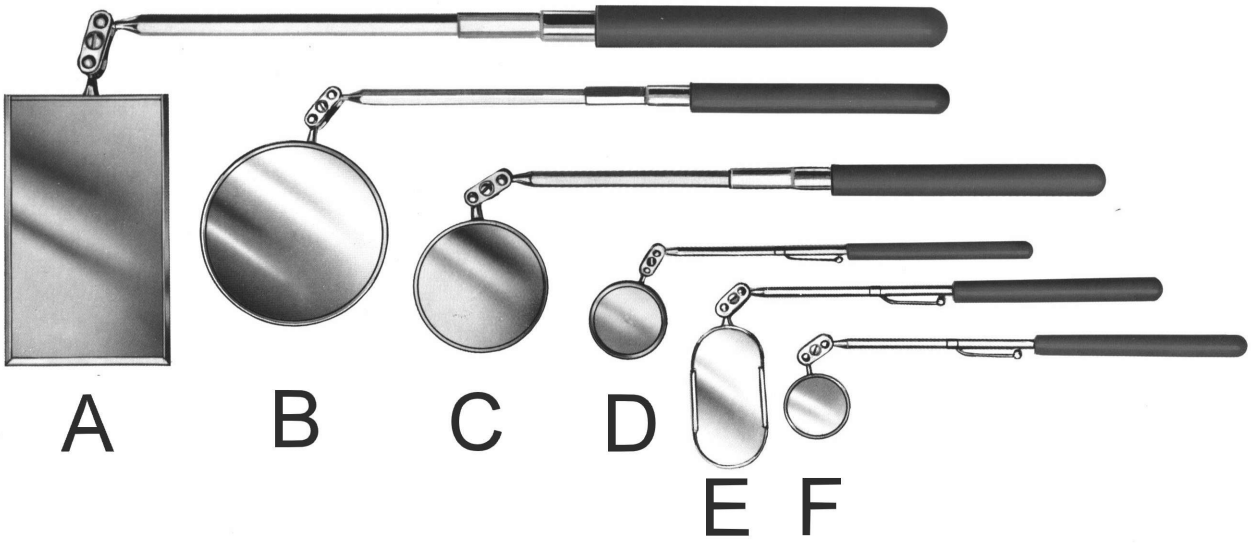

	Artikel-Nr. PART-NO.	**Ausführung** TYPE	**Spiegelgröße** MIRROR SIZE	**Länge** LENGTH	**Ersatz-Spiegelkopf** REPLACEMENT HEAD ASSY
A	**70-929**	**Rechteckig** RECTANGULAR	**54 X 89 mm** 2.1/8" x 3.1/2"	**286 - 394 mm** 11.1/4" x 15.1/2"	**-**
B	**S-2**	**Rund** CIRCULAR	**83 mm** 3.1/4"	**280 - 381 mm** 11" x 15"	**S-2HD**
C	**70-925**	**Rund** CIRCULAR	**57 mm** 2.1/4"	**254 - 356 mm** 10" x 14"	**PO-252**
D	**70-927**	**Rund** CIRCULAR	**32 mm** 1.1/4"	**203 mm** 8"	**PO-253**
E	**70-923**	**Oval** OVAL	**25 X 51 mm** 1" x 2"	**216 mm** 8.1/2"	**S34563**
F	**70-921**	**Rund** CIRCULAR	**22 mm** 7/8"	**191 mm** 7.1/2"	**A-2HD**

Magnet-Heber / MAGNETIC RETRIEVING TOOLS

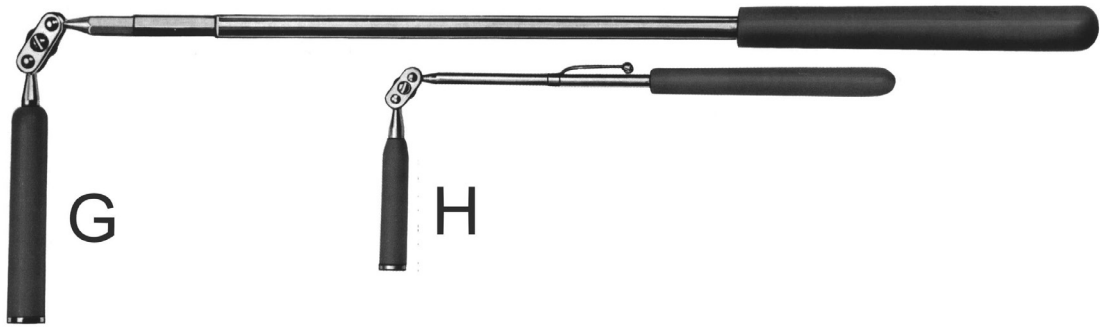

	Artikel-Nr. PART-NO.	**Länge** LENGTH			**Artikel-Nr.** PART-NO.	**Länge** LENGTH
G	**70-933**	**425 - 679 mm** 16.3/4" x 26.3/4"		**H**	**70-935**	**216 mm** 8.1/2"

SAFETY WIRE TWISTER

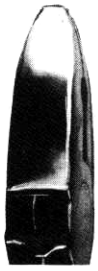
Tapered


Square


Diagonal


Cushion Throat


Deep Reach

Descriptions:

Cushion Throat – Form fit plastic in the jaws holds the cut ends of the wire and prevents them from flying into assembly.

Automatic – Twister mechanism retracts automatically making operation simpler and much faster.

Right Hand Twist – Safetytwist plier rotates clockwise when twister mechanism is pulled.

Left Hand Twist – Safetytwist plier rotates counter clockwise when twister mechanism is pulled.

Deep Reach – Twister mechanism with two extensions attached (overall 19″) provides access to deep safetywiring jobs.

REVERSIBLE - AUTOMATIC RETURN

NEW

TigerWave®
- Unique jaw design eliminates cuts and nicks in wire
- Cushion throat holds clipped wire -- No F.O.D.
- Reversible action for Left and Right twists
- Auto spring return


26W

Model	Description*
25W	6" TigerWave
26W	9" TigerWave
Standard-Jaw Reversible with Diagonal Nose	
45W	6" NSN 5120-01-429-8147
41W	9" NSN 5120-01-429-8146
42W	12" NSN 5120-01-429-8153

AUTOMATIC RETURN


1W393

9WS	6" Tapered Nose
11WS	6" Diagonal Nose
1W393	9" Diagonal Nose (NSN 5120-01-112-5031)
3W6	9" Cushion Throat
5W4	9" Left Hand Twist
2W393	12" Diagonal Nose
6W4	12" Left Hand Twist

MANUAL RETURN


31W

9W	6" Tapered Nose
11W	6" Diagonal Nose (NSN 5120-01-307-5143)
1W	9" Diagonal Nose (NSN 5120-00-305-2306)
31W	9" **AeroTwister® Professional's Choice**
3W5	9" Cushion Throat
5W6	9" Left Hand Twist
1W392	9" With Bearing on Spinner
2W	12" Diagonal Nose (NSN 5120-00-542-4171)
6W6	12" Left Hand Twist

*Models may differ slightly from photographs

SAFETY WIRE TWISTER

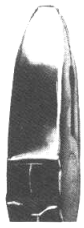
Tapered


Square


Diagonal

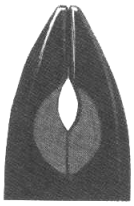
Cushion Throat


Deep Reach

Descriptions:

Cushion Throat – Form fit plastic in the jaws holds the cut ends of the wire and prevents them from flying into assembly.

Automatic – Twister mechanism retracts automatically making operation simpler and much faster.

Right Hand Twist – Safetytwist plier rotates clockwise when twister mechanism is pulled.

Left Hand Twist – Safetytwist plier rotates counter clockwise when twister mechanism is pulled.

Deep Reach – Twister mechanism with two extensions attached (overall 19″) provides access to deep safetywiring jobs.

SPECIALTY TWISTER - For difficult access situations; i.e. deep reach or close quarters.



13W 19" Deep Reach Twister

SAFETY WIRE-STAINLESS STEEL



14WA	.020 Dia. - 234 Ft.	
15WA	.032 Dia. - 91 Ft.	**1/4 Lb. Spools**
16WA	.041 Dia. - 55 Ft.	

Conforms to Govt. Spec. QQW-423, Military Spec. MS-20995-C.



17WA	.020 Dia. - 937 Ft.	
18WA	.025 Dia. - 599 Ft.	
19WA	.032 Dia. - 366 Ft.	**One Pound**
20WA	.041 Dia. - 223 Ft.	**Dispensers**
21WA	.051 Dia. - 144 Ft.	

SAFETY WIRE TWISTER KITS

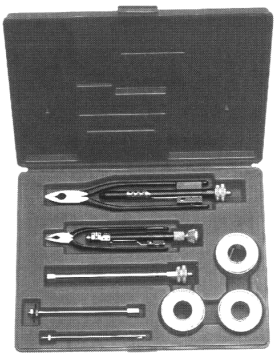

No. 105W

Professional Safety Wiring Kit. Contains three different Twisters to cover almost any application: 9" Automatic, 6" Mini, and a 19" Deep Reach Twister. Includes three 1/4 lb. spools of stainless steel safety wire (.020, .032, .041). Durable plastic storage case.

Weight: 4 lbs.
Length: 13-1/2" Width: 10"
Height: 2-1/16"



No. 109W

Limited Access Safety Wiring Kit. Contains the 6" Mini for general purpose wiring and work in close quarters, and the 19" Deep Reach Twister for special applications. Includes three 1/4 lb. spools of stainless steel safety wire (.020, .032, .041). Durable plastic storage case.

Weight: 2 lbs. 12 oz.
Length: 12-1/4" Width: 8"
Height: 1-3/4"

Model Kits	Description
105W	Professional Kit includes 1W393, 9W, 13W, 14WA, 15WA, 16WA and Case (NSN 5180-90-986-8939)
109W	Deep Reach Kit includes 11W, 13W, 14WA, 15WA, 16WA and Case (NSN 5180-01-337-9841)

Entgrater / EDGE BREAKERS

Zum Entgraten von Blechkanten

REMOVE ANY BURRS AND ROUGHNESS FROM SHEETS



2004

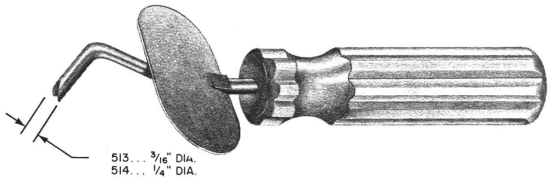

514

Artikel-Nr. PART NO.	**Klingenmaß** BLADE SIZE	**Bemerkung** REMARKS
2004	**15/64"** (6,00 mm)	**Holzgriff /** WOOD HANDLE
514	**1/4"** (6,35 mm)	**Plastikgriff /** PLASTIC SAFETY HANDLE

Spänehaken / CHIP CHASERS

Zum Entfernen von Späne zwischen Blechen nach dem Bohren

REMOVE CHIPS BETWEEN SHEETS AFTER DRILLING OF HOLES

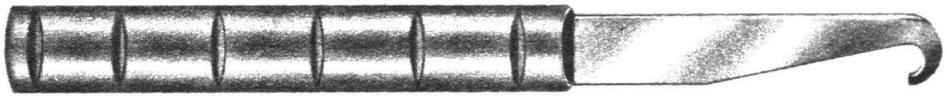

Artikel-Nr. PART NO.	**Klingenlänge** BLADE LENGTH	**Bemerkung** REMARKS
511	**2.3/4"** (70 mm)	**Plastikgriff /** PLASTIC HANDLE
512	**5.7/8"** (150 mm)	**Plastikgriff /** PLASTIC HANDLE

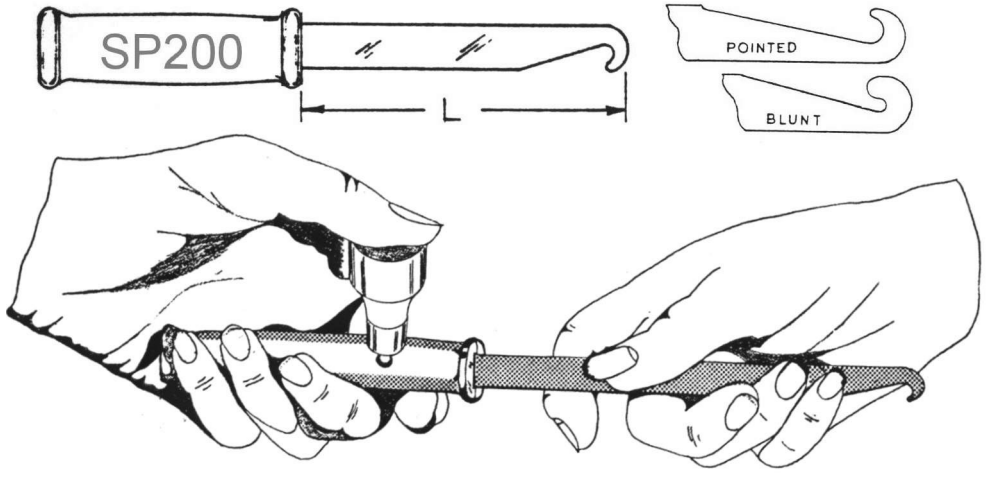

Aluminium-Griff mit auswechselbarer Klinge

ALUMINUM HANDLE WITH REPLACEABLE BLADES

Artikel-Nr. PART NO.	**Klingenlänge** BLADE LENGTH		**Artikel-Nr.** PART NO.	**Artikel-Nr.** PART NO.
Griff mit Klinge Blade with Handle			**Griff einzeln** HANDLE ONLY	**Ersatzklinge** REPLACEMENT BLADES
SP200-1	**5.7/8"** (150 mm)		**SP200**	**SP20002** (POINTED HOOK)
SP200-2	**5.7/8"** (150 mm)		**SP200**	**SP20003** (BLUNT HOOK)
SP200-3	**2.3/4"** (70 mm)		**SP200**	**SP20004** (POINTED HOOK)
SP200-4	**2.3/4"** (70 mm)		**SP200**	**SP20005** (BLUNT HOOK)

Niet-Scheren / RIVET CUTTERS

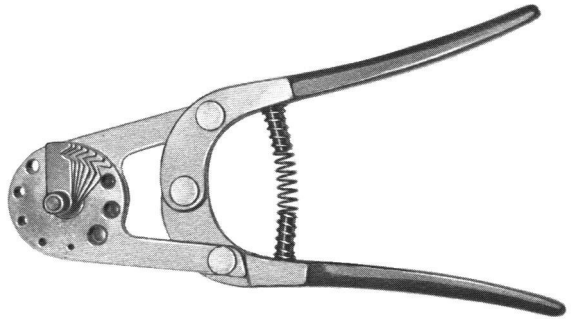

501-R

Artikel-Nr. / Part No.	**501-R**
Nietdurchmesser / Rivet Size	1/16" - 1/4" (1,59 - 6,35 mm)
Nietlängen / Rivet length	1/4" - 3/4" (6,35 - 19,05 mm)
Teilung / Increments	1/16" (1,59 mm)



EH-57

Artikel-Nr. / Part No.	**EH-57**
Länge / Length	7" (180 mm)

The EH-57 side nipper has a flat-ground blade, a curved handle and is ideal for close trimming of aluminum rivet stems on installed self-plugging MS-type rivets.

Der Seitenschneider EH-57 hat leicht gebogene Griffe, flache Schneiden mit sehr kleiner Fase, und ist ideal zum trimmen von Aluminium-Nietstiften bereits installierter selbstsichernder MS-Nieten.

Niet-Schere für den Schraubstock / BENCH TYPE RIVET CUTTER



Artikel-Nr. PART NO.	**Nietdurchmesser** RIVET SIZE	**Nietlängen** RIVET LENGTH	**Teilung** INCREMENTS
	Zoll-Type / INCH-TYPE		
500-Z	**3/32" + 1/8" + 5/32"** **3/16" + 7/32" + 1/4"** (2,38 + 3,18 + 3,97 mm) (4,76 + 5,56 + 6,35 mm)	**.1575 up to .9252** (4,00 mm bis 23,50 mm) **(inkl. 2 Distanzstücken)** (INCL. 2 DISTANCE PIECES)	**.0197** (0,5 mm)
	Metrische-Type / METRIC-TYPE		
500-M	**2,50 + 3,00 + 3,50 mm** **4,00 + 5,00 + 6,00 mm** (.0980 + .1181 + .1378) (.1575 + .1969 + .2362)	**4,00 mm bis 23,50 mm** (.1575 up to .9252) **(inkl. 2 Distanzstücken)** (INCL. 2 DISTANCE PIECES)	**0,5 mm** (.0197)

Gerade Ringschlüssel mit Schnappverschluß für Rohrverschraubungen
STRAIGHT SNAP-TIGHT TUBE FITTING WRENCHES

Artikel-Nr. PART NO.	Schlüsselweite HEX SIZE (in.)	Gesamtlänge OVERALL LENTH (in.)
195-F 05	5/16	5-1/2
195-F 06	3/8	5-1/2
195-F 07	7/16	5-3/8
195-F 08	1/2	5-1/2
195-F 09	9/16	7-1/4
195-F 10	5/8	7-5/32
195-F 11	11/16	7-1/4
195-F 12	3/4	7-5/16
195-F 13	13/16	9-1/8
195-F 14	7/8	9-3/32
195-F 15	15/16	9-1/4
195-F 16	1	9-9/32
195-F 17	1-1/16	13.59
195-F 18	1-1/8	13.59
195-F 19	1-3/16	13.59
195-F 20	1-1/4	13.59
195-F 22	1-3/8	13.84
195-F 24	1-1/2	13.84
195-F 26	1-5/8	13.84
195-F 28	1-3/4	14.21
195-F 30	1-7/8	14.21
195-F 32	2	14.21
195-F 34	2-1/8	14.53
195-F 36	2-1/4	14.53

(1) 5/16“ – 3/4" sizes have two-tone grips as shown.
(2) 13/16” – 1” sizes do not have grips.
(3) 1-1/16” – 2-1/4” sizes have foam grips (not shown).



Artikel-Nr. PART NO.	Schlüsselweite HEX SIZE (mm)	Gesamtlänge OVERALL LENTH (mm)
195-F 07	7	140.72
195-F 08	8	140.72
195-F 09	9	140.72
195-F 10	10	140.72
195-F 11	11	140.72
195-F 12	12	140.72
195-F 13	13	140.72
195-F 14	14	187.45
195-F 15	15	187.45
195-F 16	16	187.45
195-F 17	17	187.45
195-F 18	18	187.45
195-F 19	19	187.45
195-F 21	21	237.50
195-F 22	22	237.50
195-F 23	23	237.50
195-F 24	24	237.50
195-F 27	27	345.19
195-F 30	30	345.19
195-F 32	32	345.19

(1) 7-19 mm sizes have two-tone grips
(2) 21-24 mm sizes do not have grips.
(3) 27-32 mm sizes have foam grips (not shown).



Artikel-Nr. PART NO.	Beschreibung DESCRIPTION	Gewicht Weight (lbs.)
195-4STDS KIT	4-Pc. INCH kit contains 5/8”, 13/16”, 15/16”, and 1-1/16/” wrenches. (Not shown).	2.3
195-5STDM KIT	5-Pc METRIC kit contains 10mm, 11mm, 12mm, 13mm and 14mm wrenches.	2
195-7-STDS KIT	7-Pc INCH kit contains 3/8”, 7/16”, 1/2", 9/16”, 5/8”, 11/16” and 3/4” wrenches.	2.5

Zange zum Lösen von Leichtmetallverschraubungen
(z.B. Cannon Elektrostecker)
ELECTRICAL CONNECTOR PLIER
(CANNON CONNECTORS)

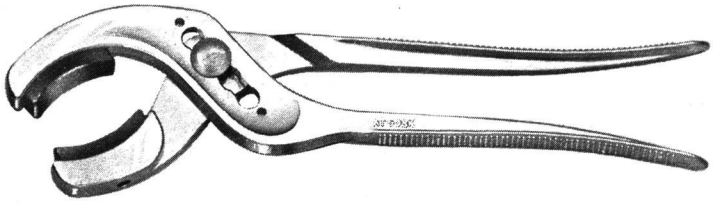

Artikel-Nr. / PART NO.	**Bemerkungen /** REMARKS
508-K	**verstellbar von 19 mm bis 63 mm, mit austauschbaren Kunststoffbacken** ADJUSTABLE FROM 3/4" TO 2.1/2"- REMOVEABLE PLASTIC INSERTS

Paint Cutters



- Reduces excess paint chip during screw removal process.
- Cuts a ring into paint around the screw head.

Part Number	Screw Size	Shank
70420	#4	1/4”-28
70422	#6	
70424	#8	
70426	#10	
70428	1/4"	

Massebürsten / RIVET HOLE BRUSHES

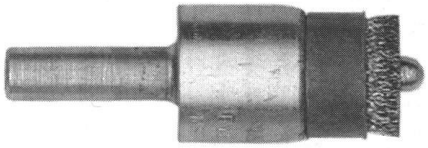

Edelstahl Drahtbesatz
STAINLESS STEEL WIRE
Drahtstärke **0,127 mm**
WIRE DIAMETER .005"
Drehzahl bis max. **8000 UPM**
RATED UP TO 8000 RPM

Artikel-Nr. / PART NO.	**Zapfendurchmesser** PILOT DIAMETER	**Bürstendurchmesser** BRUSH DIAMETER	**Schaftdurchmesser** SHANK DIAMETER
TP-6721	**3/32"** (2,38 mm)	**1/2"** (12,7 mm)	**1/4"** (6,35 mm)
TP-6741	**1/8"** (3,18 mm)	**1/2"** (12,7 mm)	**1/4"** (6,35 mm)
TP-6761	**5/32"** (3,97 mm)	**1/2"** (12,7 mm)	**1/4"** (6,35 mm)
TP-6781	**3/16"** (4,76 mm)	**1/2"** (12,7 mm)	**1/4"** (6,35 mm)
TP-6791	**7/32"** (5,56 mm)	**1/2"** (12,7 mm)	**1/4"** (6,35 mm)
TP-6801	**1/4"** (6,35 mm)	**1/2"** (12,7 mm)	**1/4"** (6,35 mm)

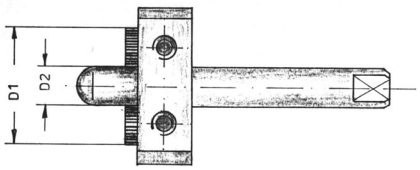

Edelstahl Drahtbesatz
Alle Teile austauschbar

STAINLESS STEEL WIRE
ALL PARTS ARE REPLACEABLE

	Bürste kpl. BRUSH ASSY	**Ersatz-Bürste** **BRUSH ONLY**	**Ersatz-Zapfen** PILOT ONLY	**Ersatz-Schaft** SHANK ONLY	**Ersatzkörper** BODY ONLY	**D1**	**D2**
Artikel-Nr. / PART NO.	**441001**	**441050**	**441056**	**441060**	**441065**	10 mm	3,2 mm
Artikel-Nr. / PART NO.	**441002**	**441050**	**441058**	**441060**	**441065**	10 mm	4,0 mm
Artikel-Nr. / PART NO.	**441010**	**441052**	**441056**	**441060**	**441068**	12 mm	3,2 mm
Artikel-Nr. / PART NO.	**441011**	**441052**	**441058**	**441060**	**441068**	12 mm	4,0 mm
Artikel-Nr. / PART NO.	**441020**	**441052**	**441056**	**441060**	**441070**	14 mm	3,2 mm
Artikel-Nr. / PART NO.	**441021**	**441052**	**441058**	**441060**	**441070**	14 mm	4,0 mm
Artikel-Nr. / PART NO.	**441022**	**441052**	**441059**	**441060**	**441070**	14 mm	4,8 mm

Druckluft-Staubsauger
AIR VACUUM CLEANER

560C

Staubsauger ohne Verlängerungen
CLEANER WITHOUT TUBES
Kunststoffgehäuse / PLASTIC BODY



560CF-18

Zubehör - Ersatzteile
ACCESSORIES – SPARES

Part Number	Material	Hose Length
560R-10	starre Verlängerung RIDGE TUBE	10“
560CF-12	flex. Verlängerung CLEAR FLEX TUBE	12“
560CF-18	flex. Verlängerung CLEAR FLEX TUBE	18“

560A3	Ersatzbeutel / BAG
560A4	Beutelverschluss / CLIP



560A3



560R10

560M

Staubsauger ohne Verlängerungen
CLEANER WITHOUT TUBES
Aluminiumgehäuse / ALUMINUM BODY



560MRE-12

Zubehör - Ersatzteile
ACCESSORIES – SPARES

Part Number	Material	Hose Length
560MRE-12	starre Verlängerung RIDGE TUBE	12“
560MRE-18	starre Verlängerung RIDGE TUBE	18“
560MFE-18	flex. Verlängerung CLEAR FLEX TUBE	18“
560MFE-24	flex. Verlängerung CLEAR FLEX TUBE	24“

560A3	Ersatzbeutel / BAG
560A4	Beutelverschluss / CLIP



560MFE18

560MH

Staubsauger mit flex. Verlängerung (12“)
und Hepa Filter Beutel
CLEANER WITH FLEX. TUBE
AND HEPA FILTER BAG
Aluminiumgehäuse / ALUMINUM BODY



Zubehör - Ersatzteile
ACCESSORIES – SPARES

Part Number	Material	Hose Length
560MRE-12	starre Verlängerung RIDGE TUBE	12“
560MRE-18	starre Verlängerung RIDGE TUBE	18“
560MFE-18	flex. Verlängerung CLEAR FLEX TUBE	18“
560MFE-24	flex. Verlängerung CLEAR FLEX TUBE	24“

70071472602	3M Hepa Filter Beutel / HEPA BAG *
70071472610	3M Filter Bag Adapter *

*** Nur für 560MH verwendbar** / FOR USE WITH 560MH ONLY

Absaugsysteme
DUST CONTROL

CLAYTON
Dustless Made Simple™

Effektive Werkzeuge für das sichere und saubere Arbeiten in der Luft- und Raumfahrt.

Aufnahme der meisten gefährlichen Stoffe durch HEPA Filter und innovative durchdachte Absaugvorrichtungen. Durch das einfache Nachrüsten Ihrer bestehenden Werkzeuge ist das System auch kostengünstig einzusetzen.

Innovative products designed for vacuum extraction in aerospace manufacturing and MRO.

High Efficiency Filtration (HEPA) vacuums and source-capture shrouded tools for dustless sanding, structural repair and composites fabrication. Simply attach to your existing tools.



The ACE-1000 Dustless Sanding System

Everything you need for serious dustless sanding and cleanup!



Weitere Informationen auf Anfrage / MORE INFORMATION ON REQUEST

Absaugsysteme
DUST CONTROL

CLAYTON
Dustless Made Simple™

Shrouded Tools Control Dust & Debris
Ummantelte Werkzeuge gegen Staub und Späne

Sealant Removal







50 mm and 75 mm Cutoff Saws



125 mm & 150 mm Random



Drum Sander



75 mm Random Orbital



Belt Sander



75 mm X 100 mm Orbital



Airbus Abrading Kit



Corner Sander



Drill Shroud
Fits all drills using
3/8-24 drill chuck









Weitere Informationen auf Anfrage / MORE INFORMATION ON REQUEST

Absaugsysteme
DUST CONTROL

CLAYTON
Dustless Made Simple™

Clear Revolution Shrouds



Seat Track Cleaning and Corrosion



Drill Bushing Guides with Extraction



Edge Deburring and Finishing



Clear Revolution Piloted Burnishing



Routers







Weitere Informationen auf Anfrage / MORE INFORMATION ON REQUEST

Nadelfeilen-Satz
NEEDLE FILE SET
ATSK 3519 K



Lieferumfang / CONSISTING OF:

1 St./EA	**Plastiktasche**	PLASTIC POUCH
12 St./EA	**Feilen 160 mm**	GROBET FILES 6.1/4"
1 St./EA	**Halter mit Spannfutter**	COLLET LOCKING HANDLE

Taschenlampen - MAG LITE
FLASHLIGHT - MAG LITE

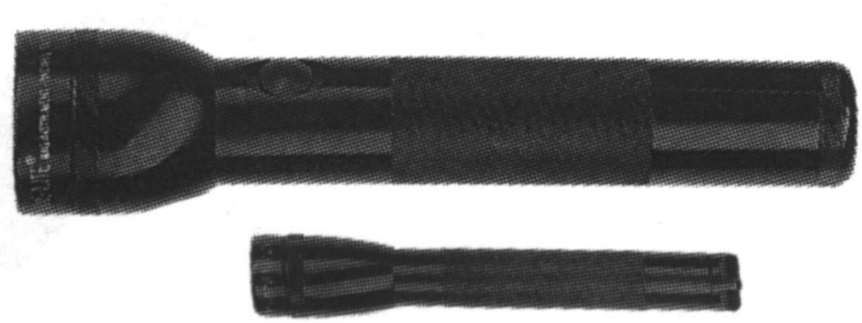

Artikel Nr. PART NO.	**Beschreibung** DESCRIPTION
M2A-016	**Taschenlampe "MINI MAGLITE", Länge ca. 146 mm, inkl. 2 Batterien** 2-CELL AA Flashlight, "MINI MAGLITE", LENGTH 5.3/4", INCL. 2 BATTERIES
S2D-016	**Taschenlampe "MAGLITE", Länge ca. 260 mm, Batterien nicht enthalten !** 2-CELL D FLASHLIGHT, "MAGLITE", LENGTH 10.1/4", BATTERIES NOT INCLUDED

Pneumatische Blechscheren
PNEUMATIC SHEARS

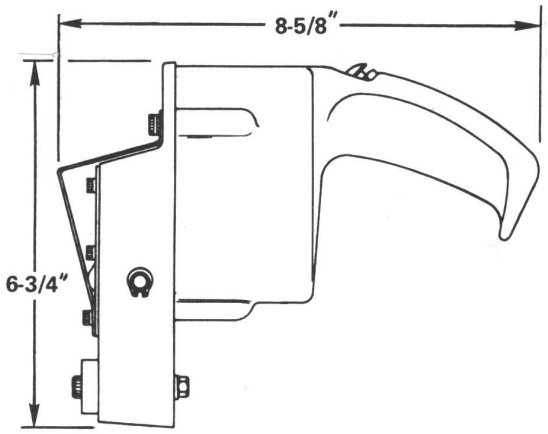

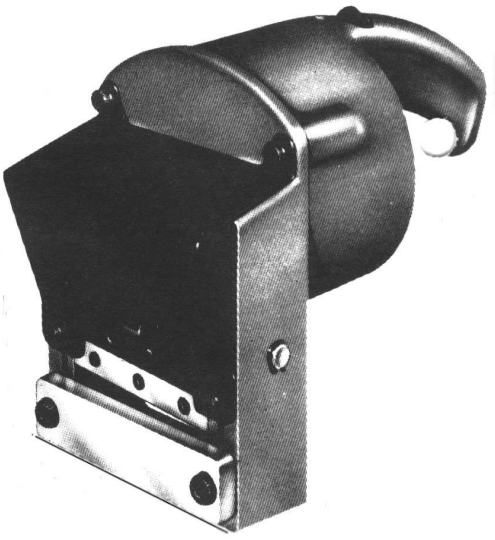

Schlagschere
TAB SHEAR

Artikel-Nr. / PART NO.: **650**

Leistung	**1,6 mm Stahl**	**2,4 mm Aluminium**
CAPACITY	1/16" Steel	3/32" Aluminum
Öffnung	**3,18 mm x 76,2 mm**	
OPENNING	1/8" x 3"	
Gewicht	**ca. 3 kg**	
WEIGHT	APPR. 6.5 LBS.	



Leistung **max. 1,2 mm Stahl**
CAPACITY 18 GAUGE STEEL

Gewicht **1,3 kg**
WEIGHT 2,9 LBS.

Artikel-Nr. / PART NO.: **P-500**



Leistung : max. 1,9 mm Stahl
CAPACITY: 14 GAUGE STEEL

Gewicht: 1,7 kg
WEIGHT: 3,8 LBS.

Artikel-Nr. / PART NO.: **P-540**

PNEUM. ROLLENSCHEREN, UMSCHALTBAR
PNEUM. TRIM SHEARS, REVERSIBLE



EC-7 PR

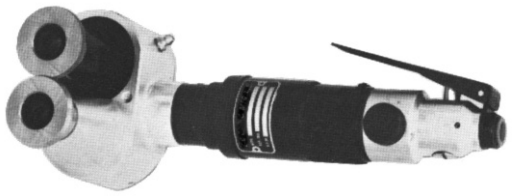

EC-8 LR

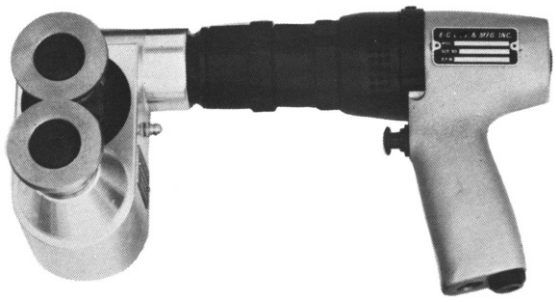

EC-9 PR

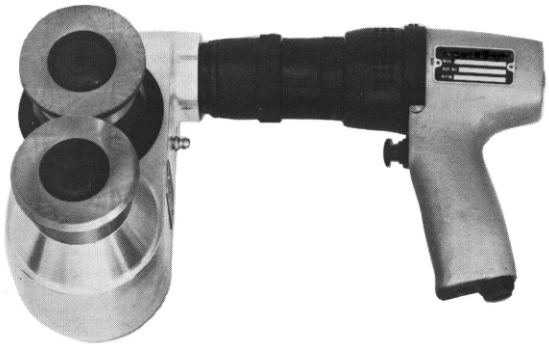

EC-10 PR

Artikel Nr. * PART NO. *	**ca. Leistung/Normal Stahl** APPR. CAP./MILD STEEL		**Schnittweite** THROAT CAP.	**Gewicht** WEIGHT	**Länge** LENGTH	**Höhe** HEIGHT	**Breite** WIDTH	**min. Schlauchweite** MIN. HOSE SIZE
EC-7 LR	**13 Gauge** ca. 2,4 mm	**8 Ft./min** 2,4 m/min	**1.1/4"** 31,75 mm	**4.5 lbs.** 2,1 kg	**10.1/4"** 260 mm	**3.13/16"** 97 mm	**3.1/4"** 83 mm	**5/16"** 8 mm
EC-7 PR	**13 Gauge** ca. 2,4 mm	**8 Ft./min** 2,4 m/min	**1.1/4"** 31,75 mm	**5 lbs.** 2,3 kg	**8.1/4"** 210 mm	**3.13/16"** 97 mm	**3.1/4"** 83 mm	**5/16"** 8 mm
EC-8 LR	**14 Gauge** ca. 2,1 mm	**8 Ft./min** 2,4 m/min	**2.1/4"** 57,15 mm	**5.5 lbs.** 2,5 kg	**10.1/4"** 260 mm	**3.13/16"** 97 mm	**4.1/4"** 108 mm	**5/16"** 8 mm
EC-8 PR	**14 Gauge** ca. 2,1mm	**8 Ft./min** 2,4 m/min	**2.1/4"** 57,15 mm	**5.5 lbs.** 2,5 kg	**8.1/4"** 210 mm	**3.13/16"** 97 mm	**4.1/4"** 108 mm	**5/16"** 8 mm
EC-9 PR	**10 Gauge** ca. 3,4 mm	**4 Ft./min** 1,2 m/min	**2.1/2"** 63,50 mm	**12.5 lbs.** 5,7 kg	**11.5/8"** 295 mm	**5.5/8"** 143 mm	**5"** 127 mm	**3/8"** 9,5 mm
	ca. Leistung/Edelstahl APPR. CAP./INCONEL							
EC-10PR	**Upto .080"** bis 2,00 mm	**3.5 Ft./min** 1,0 m/min	**2."** 50,80 mm	**19 lbs.** 8,6 kg	**12.1/8"** 308 mm	**7.3/8"** 187 mm	**5"** 127 mm	**3/8"** 9,5 mm

*** L = Straight Motor/Gerader Motor P = PistolGrip Motor/Pistolengriff-Motor R = Reversible Motor/Umschaltbarer Motor**

ERSATZROLLEN FÜR ROLLENSCHEREN
REPLACEMENT ROLLS FOR TRIM SHEARS

für Rollenschere Mod. FOR TRIM-SHEAR MOD.	**Artikel-Nr./Zuführschneidrolle** PART-NO./FEED CUTTER	**Artikel-Nr./Schneidrolle** PART-NO./ROLL CUTTER
EC-7	**EC9097**	**EC9098**
EC-8	**EC9097**	**EC9101**
EC-9	**EC9280**	**EC9279**
EC-10	**EC9915**	**EC9914**

PNEUMATIC & HAND NIBBLER

Dotco Pneumatic Nibbler

12-10 Series 0.6 hp (0.45 kW)			
Part Number	**Cap. (steel)**	**Overall Length**	**Weight**
12L2062-96	18 Gauge	8-3/8” (213 mm)	1.1 lbs (0.5 kg)



- Rear exhaust
- Oilless blades optional

Kett Pneumatic Nibbler

1.0 hp (0.75 kW)			
Part Number	**Cap. (steel)**	**Overall Length**	**Weight**
AN2000	14 Gauge	10” (254 mm)	7 lbs (3.2 kg)



- Precise cutting control for light metal cutting needs.
- Also cuts most grades of stainless to 16 gauge.

Kett Pneumatic Nibbler

0.5 hp (0.37 kW)			
Part Number	**Cap. (steel)**	**Overall Length**	**Weight**
PN-1000	18 Gauge	7.3/4” (197 mm)	2.5 lbs (1.1 kg)



Quick-Snip Hand Nibbler

Part Number	Capacity Steel	Capacity Aluminum
04-J1251	18 Gauge	15 Gauge



- Heavy-duty, industrial quality.
- No distorting, burring or curling at edges of cut.

Monodex Hand Nibbler

Part Number	Capacity Steel	Capacity Aluminum
04-J1351	17 Gauge	15 Gauge



- Durable & lightweight plastic.
- No distorting, burring or curling at edges of cut.

Heißlufgebläse
HOT AIR GUN



351052 Case
BHG 360 Li-Ion

PART NO.	**351052 Case**
Dimensions (h x w x d)	240 x 65 x 265 mm
Voltage	36 V, rechargeable li-ion battery
Output	300 W
Temperature	400 °C without nozzle / 500 °C with 7 mm reduction nozzle (included)
Airflow rate	100 l/min.
Run time	15 min.
Charger	LS-36 V
Charging time	2.6 Ah 30 min (75%) 60 min. (100%)
Weight	approx. 1790 g (including rechargeable battery)

Declaration of independence for hot air

STEINEL gives you mobility: With its powerful li-ion rechargeable battery, the cordless version of the practical HG 350 S provides ultimate freedom of movement for hot-air applications – even at places without mains power. The formidable 36-volt li-ion power pack that drives the BHG 360 Li-Ion has a capacitance of 2600 mAh and delivers the energy for 15 minutes of unrestricted hot-air work. It has no memory effect and impresses with minimal self-discharge.
As a result, this hot air tool - which provides the same temperature stages at its mains-powered counterpart - is immediately ready for operation even after a prolonged period out of use.

The charger supplied with the tool recharges the battery to 75% capacity in just 30 min and to full charge in 60 min.

Features

- Lightweight, ergonomically optimised hot air tool
- Integrated LED light
- Integrated ring for hanging the tool
- Soft grip handle
- Thermal cut-out
- ESD-safe: suitable for use at places where there is a risk of electrostatic discharge
- "Thermo-Signal" temperature indicator

Setting capabilities

Three-stage switch for setting OFF/COLD/HOT


Ideal for de-soldering electronic components


With optional reflector nozzle, ideal for shrinking cable sleeves



Conveniently positioned control switch for setting OFF / COLD / HOT


The ergonomically shaped soft grip handle ensures comfortable handling


The LED light always provides bright illumination in the work area and also serves as a telltale lamp


With its hanging ring, the BHG 350 Li-Ion is always in easy reach in extreme work situations

Semco Dosierpistolen
SEMCO SEALANT GUNS

Pneumatic Gun



250A-6 (250065)
*without Air Hose Assembly

Artikel-Nr. PART NO.	Modell MODEL	Kartuschen Kapazität CARTRIDGE CAPACITY
250255	250A-2.5	2.5 Ounce
250065	250A-6	6 Ounce
250125	250A-12	12 Ounce

Manual Gun



850-6 (221830)

Artikel-Nr. PART NO.	Modell MODEL	Kartuschen Kapazität CARTRIDGE CAPACITY
221824	850-2.5	2.5 Ounce
221830	850-6	6 Ounce
221836	850-12	12 Ounce

Druckluftschlauch/Anschluss
Air Hose Assemblies

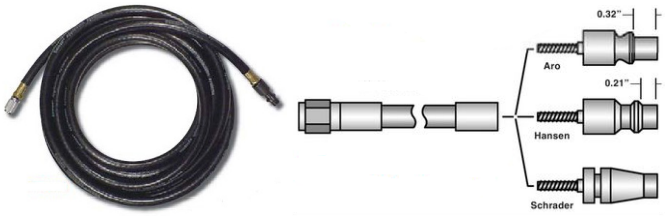

Aro Connect	Hansen Connect	Schrader Connect	Overall Length
280012	280000	280006	5' (1,5m)
280013	280001	280007	10' (3,0m)

Standarddüsen
Standart Nozzles

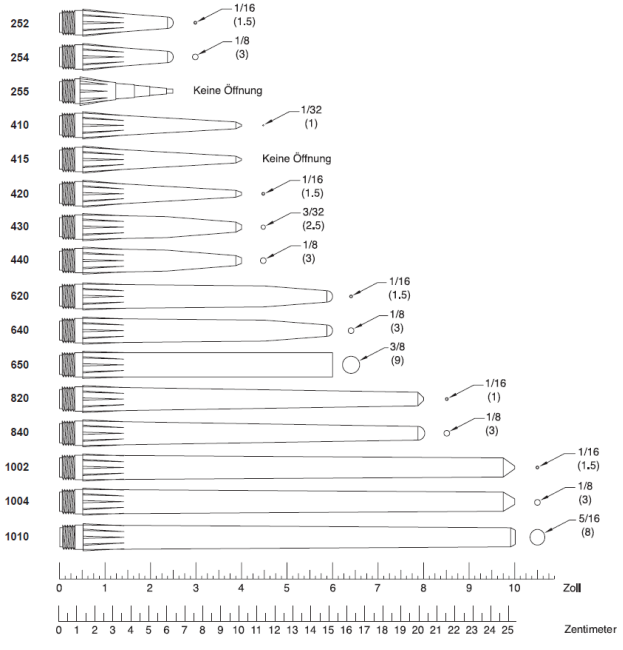

Alle Maße in Zoll. Maßangaben in Klammern in Millimeter.

Kartuschenhalter
Sealant Gun Retainers



*only for Pneumatic Gun

220256	220928	220923
2.5 Ounce	6 Ounce	12 Ounce

Leerkartuschen, Kolben und Dichtungen
DISPOSABLE PLASTIC CARTRIDGES, PLUNGERS & CAPS

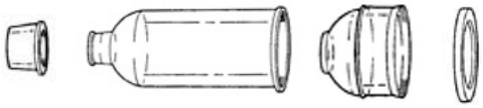

Dichtung Front End Cap | **Kartusche** Cartride | **Kolben** Plunger | **Flanschkappe** Flange End Cap

Kartusche Cartridge	**Kartusche & Kolben** Cartridge & Plunger	**Kapazität** Capacity
220315	**220323**	2.5 Ounce
220318	**220325**	6 Ounce
220321	**220329**	12 Ounce

Artikel-Nr. PART NO.	Beschreibung DESCRIPTION
220252	Plastik Kolben PLASTIC END CAP
220257	Dichtung Front End Cap
220238	Flanschkappe Flange end Cap

APPLICATION / REMOVAL TOOLS & ACCESSORIES

Sealant Mixer



•Securely chucks into your drill for mixing Semkit sealant tubes.

Part Number	Shank
70337	1/4" Hex

Roller Nozzles



Roller Assembly	Replacement Roller	Size
232693	232701	1” (25 mm)
232692	232702	2” (51 mm)

- Apply sealant evenly over a wide area of substrate.
- Ideal for the application of faying surface sealants.
- Use with disposable cartridges.

Nylon Sealant Tape Roller



Part Number	Roller Diameter	Roller Width
70339	1-1/4” (32 mm)	2” (51 mm)

- For Applying Sealant Tape
- Allows maximum pressure for a leak-proof & smooth seal

Sealant Spatulas



7-1/4” Overall length

Available in:
-NGL (MEDIUM)
-UNGL (ULTRA STRONG)
-XNGL (EXTREME)

Part Number	End Widths
226241	0.19” & 0.38”
226242	0.13” & 0.28”
226243	0.48” & 0.38”

Part Number	Description
226244	All Three Spatulas With Plastic Case

Stainless Steel Sealant Spatula Set



Surgical Stainless Steel Construction

Part Number	Description
57-104-2	Complete 4 PC Set

- Four double-end tools with different angles and knife shapes.
- Great for shaping and spreading sealant and other soft materials.

Sealant Smoothing Tool



Fiberglass reinforced plastic for tooling & smoothing sealants.

Part Number	Overall Length
231349	9-1/2” (241 mm)

Solid Brass Sealant Smoothing Tool



Non-Sparking & Reusable, Perfect for Aerospace Work

Part Number	Overall Length
70799	9” (229 mm)

APPLICATION / REMOVAL TOOLS & ACCESSORIES

Masking Tape Cutter



Durable Acrylic Plastic Construction
***Note**: May scratch new sheet metal.

Part Number	Dimensions
70796	8”L (3/16” thick) x 1” Wide

Sealant Spreaders



Part Number	Type	Dimensions
229394	Standard	4.0” x 2.8” (102 x 71 mm)
229395	Comb	3.0” x 3.0” (76 x 76 mm)

- Reinforced Plastic Construction

Scratch Resistant Hand Scrapers



Scratch Resistant Sealant Scraper		
Part Number	**Size**	**Tip Width**
70792	6”L (3/16” thick)	3/4"
70794	9”L (3/16” thick)	3/4” & 1/4"

***Note:** Celcon Plastic, Scratch / Chemical Resistant

Hand Scraper



Specially blended plastic designed for sealants, paint, glues etc.

Part Number	Overall Length
11493	5-7/8” (149 mm)

Specialty Hand Scrapers



Glass Filled Nylon Plastic, Double Angle Tips for Toughness

Hardened Sealant Scraper		
Part Number	**Size**	**Tip Width**
70784	8”L (3/16” thick)	2” & 3/4"



Glass Filled Nylon Plastic, Double Angle Tips for Toughness

Hardened Sealant Scraper		
Part Number	**Size**	**Tip Width**
70780	9”L (3/16” thick)	3/4” & 1/4"



Glass Filled Nylon Plastic, Double Angle Tips for Toughness

Hardened Sealant & Seat Track Scraper		
Part Number	**Size**	**Tip Width**
70782	9”L (3/16” thick)	3/4” & 1/4"



Acrylic Plastic, Long Angled Edge, Single End with Rounded Handle

Soft Sealant Scraper		
Part Number	**Size**	**Tip Width**
70786	6” (3/16” thick)	3/4”



Acrylic Plastic, Long Angled Edge

Soft & Wet Sealant Scraper		
Part Number	**Size**	**Tip Width**
70788	9”L (3/16” thick)	3/4" & 1/4"



Acrylic Plastic, Double Angle Tips for Toughness
Note: May scratch new sheet metal.

Soft Sealant Scraper		
Part Number	**Size**	**Tip Width**
70790	9”L (3/16” thick)	1” & 1/4"

APPLICATION / REMOVAL TOOLS & ACCESSORIES

Sealant Removal Cutters



Part Number	Diameter	Thread	Recommended RPM	Max RPM
96933	.40”	1/4-28	950	3,200
96935	.83”	1/4-28	950	3,200

- Bottom & side cutting plastic blades.
- Aggressively removes sealant without damaging substrate.
- Internal cavity on 96935 for use over standard fasteners & rivets.

Sealant Removal Bristle Disks



Bristle Disc Arbor & Tow Holding Caps	
Part Number	**Capacity**
96458	1/8” to 1/4" & 3/8” to 1/2"

Bristle Discs			
Part Number	**Diameter**	**Recommended RPM**	**Max RPM**
96937	2”	12,000	20,000
96939	3”	12,000	20,000

- Abrasive, particle filled discs remove up 1/16” of sealant
- Bristles remove sealant without damaging underlying surface.

Sioux Sealant Removal Tool Kit 45° & 90°



Part Number	Description
1AM1141/51K	Complete 14 PC Kit

- Perfect For Limited Access Areas
- Remove aircraft sealants quickly & safely with minimal effect on paint, primer or aircraft metal.
- 800 RPM drill includes both 45° & 90° angle head assemblies.
- Eliminates the need to use chemical solvents for better worker health & safety, as well as easier cleanup

Includes:
800 RPM Drill Motor
45° & 90° Angle Head Assemblies, Thread 1/4-28
Five 96933 Cutters
Five 96935 Cutters
Fitted Carrying Case

Sealant Removal Angle Drill



* shows 1AM1141

Part Number	Angle Head	Free RPM	O.A.L.	Weight
1AM1151	90°	800	11,5” (292 mm)	1.8 lbs (0,8 kg)
1AM1141	45°	800	11,5” (292 mm)	1.8 lbs (0,8 kg)

Sealant Applicators and Smoothing Tools

TOOLS ON THE FOLLOWING PAGES ARE AVAILABLE IN MATERIALS LISTED BELOW.
MATERIAL CODE/USAGE FOR PART NUMBER COMPLETION:

-PP	High density polypropylene is our softest material and suited to removal or spreading of softer sealants and coatings. Is the material of choice for application of films such as tint/security film on glass surfaces.
-ACRYL/PC	Harder materials which are 'pure' plastics without glass reinforcement. Correctly used,these are best for working on polished surfaces, where polypropylene is too soft. Less likely to pick up surface grit or contamination than polypropylene and with less abrasive potential than glass filled materials.
-CEL	Aerospace certified material without any glass reinforcement. Suited to removal of relatively soft (or chemically softened) coatings.
-NGL	Glass-filled Nylon (15%) holds a better edge than PP but still has some resilience. The glass reinforcement has some potential for surface marring but used with lubricants or chemicals this is unlikely even on relatively soft surfaces.
-UNGL	Glass-filled Nylon (30%) has less resilience and is best 'general purpose' material as it can still tackle removal/application processes on softer surfaces when used with care, but is also suited to tougher removal operations. Holds a very good edge which can be resharpened.
-XNGL	Glass-filled Nylon (50%) is the hardest and strongest of all our tool plastics and holds a very sharp and hard edge. Glass content gives inherently abrasive properties suited to very tough material removal operations. Still far less likely to mar surfaces than metal tools and is particularly suited to re-sharpening. Extreme resistance to chemicals and solvents and minimal degradation of strength over time.

Sealant Application Tools / Spreading

ITH-40-NGL

Handle for Tips below



* only available in -NGL

RT-41-S Bead Tip	**RT-42-S** Scoop Tip	**RT-43-S** Squeegee Tip
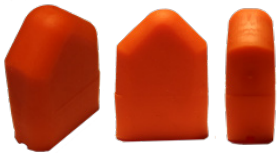	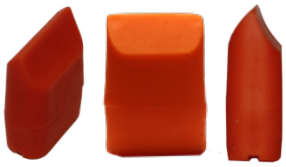	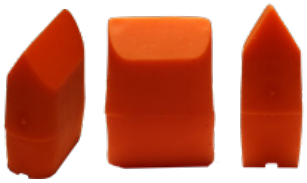

Extended Reach Tool Systems



Scraper Tools

4 Piece Kit

Kit Includes:
ATH-8-( )*
ATH-9-( )*
ATH-10-( )*
ATH-11-( )*

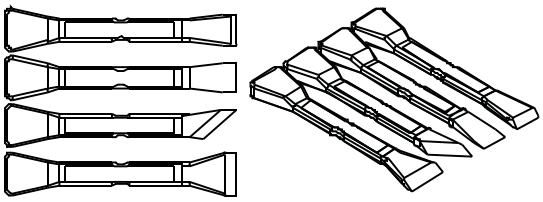

(P/N ATH-S-(____)*)

11 Piece Micro Scraper Kits

Kit Includes:
MSH-1-UNGL
10 X S-1-XNGL

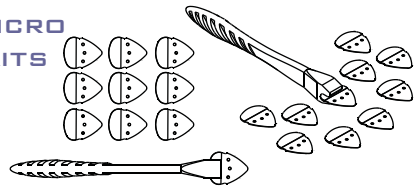

(P/N MSH-K-XNGL)

5 Piece Kit

Kit Includes:
ATH-11-XNGL
ATH-10-XNGL
ATH-8-XNGL
ATH-15-XNGL
ATH-17-XNGL

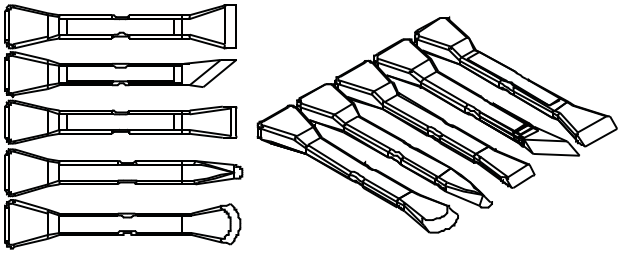

(P/N ATH-SUK2X-XNGL)

5 Piece Kit & Pouch

Kit Includes:
ATH-11-XNGL
ATH-10-XNGL
ATH-8-XNGL
ATH-15-XNGL
ATH-17-XNGL
TR-5-R



(P/N ATH-SUK2-XNGL)

5 Piece Kit

Kit Includes:
ATH-8-XNGL
ATH-10-XNGL
ATH-14-XNGL
ATH-23-XNGL
ATH-24-XNGL

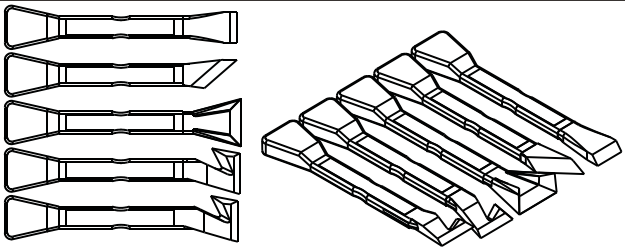

(P/N ATH-SUK3X-XNGL)

5 Piece Kit & Pouch

Kit Includes:
ATH-8-XNGL
ATH-10-XNGL
ATH-14-XNGL
ATH-23-XNGL
ATH-24-XNGL
TR-5-R



(P/N ATH-SUK3-XNGL)

10 Piece Kit

Kit Includes:

ATH-8-( )*	ATH-15-( )*
ATH-9-( )*	ATH-16-( )*
ATH-10-( )*	ATH-17-( )*
ATH-11-( )*	ATH-18-( )*
ATH-13-( )*	ATH-14-( )*

Greatly Reduces The Likelihood of Damage To The Base Material!

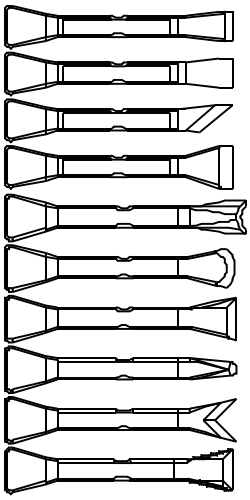

Touch Enough To Scrape

But Not Hard Enough to Damage!

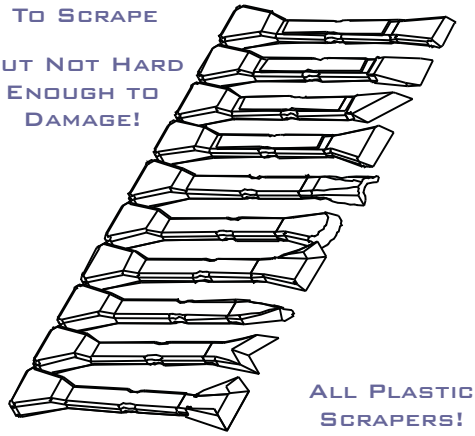

All Plastic Scrapers!

(P/N ATH-DS2-UNGL)



For Use in Sensitive Scraping Applications!

10 Piece Kit & Pouch

Kit Includes:
ATH-DS2-UNGL
TR-10-R



(P/N ATH-DSG2-UNGL)

2 Piece Push/Pull Scraper Kit

Kit Includes:
ATH-23-XNGL
ATH-24-XNGL

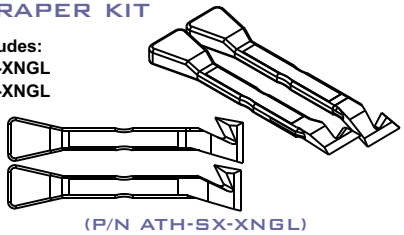

(P/N ATH-SX-XNGL)

Scrapers can be purchased separately / Auch einzeln lieferbar

Pry Tools

4 Piece Kit

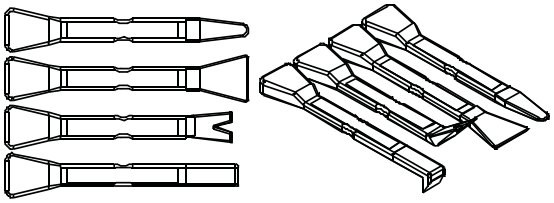

Kit Includes:
ATH-1-( )*
ATH-2-( )*
ATH-3-( )*
ATH-4-( )*

(P/N ATH-K-(____)*)

2 Piece Narrow Pry Tool Kit

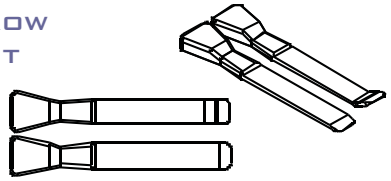

Kit Includes:
ATH-20-XNGL
ATH-21--XNGL

(P/N ATH-KX-XNGL)

5 Piece Kit

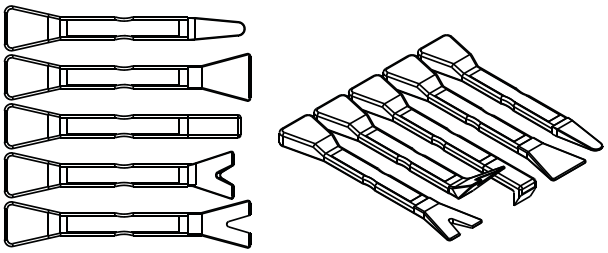

Kit Includes:
ATH-1-(___)*
ATH-2-(___)*
ATH-4-(___)*
ATH-5-(___)*
ATH-7-(___)*

(P/N ATH-KUK-(_____)*)

5 Piece Pry Kit & Pouch



Kit Includes:
ATH-1-(___)*
ATH-2-(___)*
ATH-4-(___)*
ATH-5-(___)*
ATH-7-(___)*
TR-5-R

(P/N ATH-SUK2-XNGL)

7 Piece Pry Kit

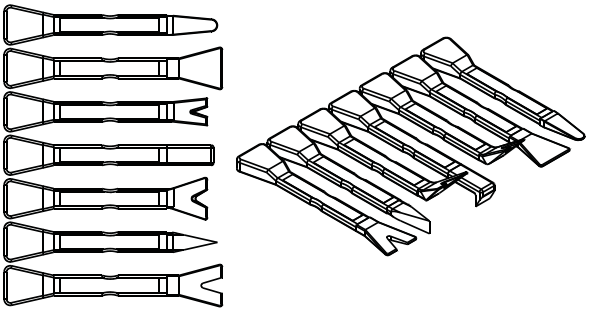

Kit Includes:
ATH-1-(___)*
ATH-2-(___)*
ATH-3-(___)*
ATH-4-(___)*
ATH-5-(___)*
ATH-6-(___)*
ATH-7-(___)*

(P/N ATH-M-(___)*)

5 Piece Window Tint Kit & Pouch



Kit Includes:
ATH-1-PP
ATH-2-PP
ATH-23-PP
ATH-24-PP
ATH-29-PP
TR-5-R

(P/N ATH-SUK2-XNGL)

10 Piece Mixed Pry Kit & Pouch



Kit Includes:
ATH-1-NGL ATH-6-NGL
ATH-2-NGL ATH-7-NGL
ATH-3-NGL ATH-1-PP
ATH-4-NGL ATH-5-PP
ATH-5-NGL
GTR-M-PMMA-BK

(P/N ATH-MG-NGL)

8 Piece Panel Adjustment Kit & Pouch



Kit Includes:
LTF-1-N ATH-20-XNGL
ATH-5-UNGL ATH-21-XNGL
ATH-19-UNGL LTF-2-N
ATH-19R406-UNGL
GTR-M-PMMA-BK

10 Piece Pry/Scraper Kit & Pouch



Kit Includes:
ATH-1-NGL ATH-8-UNGL
ATH-2-NGL ATH-9-UNGL
ATH-4-NGL ATH-10-UNGL
ATH-5-NGL ATH-11-UNGL
ATH-6-NGL
ATH-7-NGL

(P/N ATH-MUK-NGL)

10 Piece Mixed Pry/Scraper Kit & Pouch



Kit Includes:
ATH-1-NGL ATH-6-NGL
ATH-2-NGL ATH-7-NGL
ATH-3-NGL ATH-1-PP
ATH-4-NGL ATH-5-PP
ATH-5-NGL
GTR-M-PMMA-BK
ATH-8-UNGL
ATH-9-UNGL
ATH-10-UNGL
ATH-11-UNGL

(P/N ATH-MP-NGL)

2 Piece Large Pry Tool Kits

Kit Includes:
LTF-1-N
LTF-2-N

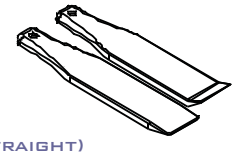

(Straight)
(P/N LTF-K-N)

Kit Includes:
LTF-3-UNGL
LTF-4-UNGL

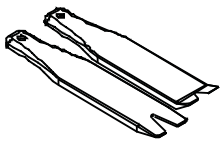

(Forked)
(P/N LTF-K3-UNGL)

Touch Enough To Pry But Not Hard Enough to Damage!

All Plastic Pry Tools!

Greatly Reduces The Likelihood of Damage To The Base Material!

For Use in Sensitive Prying Applications!

Scrapers can be purchased separately / Auch einzeln lieferbar

APPLICATION/REMOVAL TOOLS & ACCESSORIES

Air Chisel Quick Disconnect Scraper

Schaft 10,2 x 30 / 40,3 mm SHANK .401 x 1.164 / 1.11/16”	**Artikel-Nr. PART NO.**	**Größe SIZE**
	**AHSQD-8-XNGL**	21 mm
	**AHSQD-9-XNGL**	21 mm
	**AHSQD-27-XNGL**	13 mm
	**AHSQD-17-XNGL**	6-10 mm
	**AHSQD-6-XNGL**	12 mm
	**AHSQD-29-XNGL**	50 mm
	**AHSQD-15-XNGL**	29 mm
	**AHSQD-62-XNGL**	6 mm

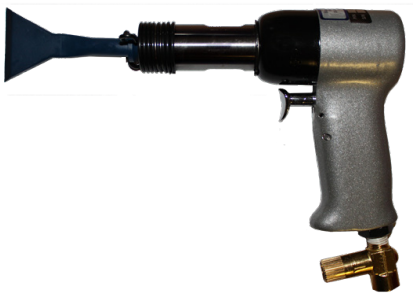



SP-12-NGL
Extended Reach Pole System 12” (30,5cm)

RECOMMENDED USE WITH OUR RIVET HAMMER 2-X (WITH QUICK CHANGE RETAINER SPRING 114C-3)

Andere Abmessungen/Formen auf Anfrage / OTHER DIMENSIONS/SHAPES ON REQUEST

Vakuumsauger
VACUUM CUP



TL3TH

3" Concave Vacuum Cup with T-Handle

Used to detect damage in honeycomb core sandwich structures by applying vacuum.

Features:

Compact size for accurate positioning of small items.

Attaches to flat or curved smooth, nonporous surfaces.

Alternates as vacuum mounting cup with 1/4-20 threaded stud when handle is removed.

Red-line indicator warns user of any vacuum loss.
Check valve allows repumping without loss of remaining vacuum.
Lift tabs on vacuum pad edges permit instant release.
Supplied with vacuum pad protector.

Specifications:

Vacuum Pad: Concave, 3" [8 cm] diameter (model TL3)

Minimum Radius for Curved Load: 4" [102 mm]
Load Capacity: 15 lbs [7 kg] per vacuum cup

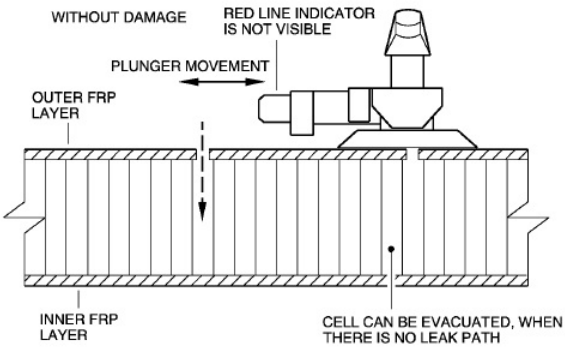

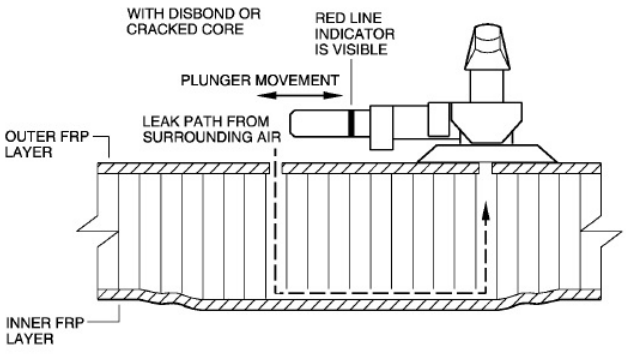

HI-LOK SECHSKANT-STIFTSCHLÜSSEL
HI-LOK HEX KEYS

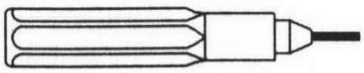

607

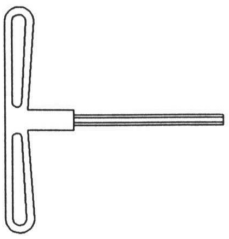

EH609

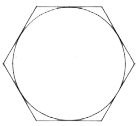

Artikel Nr. PART NO.	Stift-Größe HEX KEY SIZE		Sechskantstifte, grade REPLACEMENT STRAIGHT BITS
607-028	**.028**	0,71 mm	57900
607-035	**.035**	0,89 mm	57902
607-050	**.050**	1,27 mm	57904
607-1/16"	**1/16"**	1,59 mm	57906
607-5/64"	**5/64"**	1,98 mm	57910
607-3/32"	**3/32"**	2,38 mm	57914
607-1/8"	**1/8"**	3,18 mm	57926

Artikel Nr. PART NO.	Stift-Größe HEX KEY SIZE	
EH609-3/32"	**3/32"**	2,38 mm
EH609-1/8"	**1/8"**	3,18 mm
EH609-5/32"	**5/32"**	3,97 mm
EH609-3/16"	**3/16"**	4,76 mm
EH609-7/32"	**7/32"**	5,56 mm
EH609-1/4"	**1/4"**	6,35 mm
EH609-5/16"	**5/16"**	7,94 mm

Sechskant Winkelschlüssel
HEX L-Wrench

KURZ INCH / SHORT INCH



Artikel Nr. PART NO.	Größe SIZE	Inch	mm	Inch	mm
57002	**.028**	1.2	31	0.22	6
57004	**.035**	1.2	31	0.34	9
57006	**.050**	1.6	42	0.53	13
57008	**1/16**	1.8	45	0.56	14
57010	**5/64**	1.9	48	0.61	15
57012	**3/32**	2.0	51	0.65	16
57013	**7/64**	2.1	54	0.70	18
57014	**1/8**	2.3	58	0.75	19
57018	**9/64**	2.4	61	0.80	20
57020	**5/32**	2.5	64	0.84	21
57022	**3/16**	2.8	70	0.94	24
57024	**7/32**	3.0	77	1.03	26
57026	**1/4**	3.3	83	1.13	29
57028	**5/16**	3.8	96	1.25	32

LANG INCH / LONG INCH



Artikel Nr. PART NO.	Größe SIZE	Inch	mm	Inch	mm
-	-	-	-	**-**	-
58007	**.035**	2.7	68	0.34	9
58003	**.050**	2.8	72	0.53	13
58001	**1/16**	3.0	76	0.56	14
58002	**5/64**	3.2	81	0.61	15
58004	**3/32**	3.4	86	0.65	16
58005	**7/64**	3.6	90	0.70	18
58006	**1/8**	3.8	95	0.75	19
58010	**9/64**	4.0	101	0.80	20
58012	**5/32**	4.2	107	0.84	21
58014	**3/16**	4.5	114	0.94	24
58016	**7/32**	4.9	124	1.03	26
58018	**1/4**	5.3	133	1.13	29
58020	**5/16**	6.0	152	1.25	32

Stiftschlüssel, ASTER-Recess (5LOP)



Winkelschlüssel / Angle Wrench

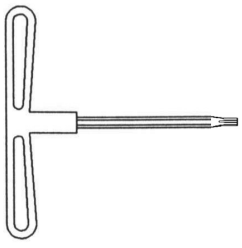

T-Griff
T-Handle



Aster® Recess Shape

Artikel Nr. PART NO.	SIZE	DESC.	SCREW DIA.
EHW-A5L-05	**5/32**	A5L-05	2
EHW-A5L-06	**3/16**	A5L-06	3
EHW-A5L-07	**7/32**	A5L-07	3A
EHW-A5L-08	**1/4**	A5L-08	4

Artikel Nr. PART NO.	SIZE	DESC.	SCREW DIA.
EHT-A5L-05	**5/32**	A5L-05	2
EHT-A5L-06	**3/16**	A5L-06	3
EHT-A5L-07	**7/32**	A5L-07	3A
EHT-A5L-08	**1/4**	A5L-08	4

HI-LOK LEHREN
HI-LOK SCALES

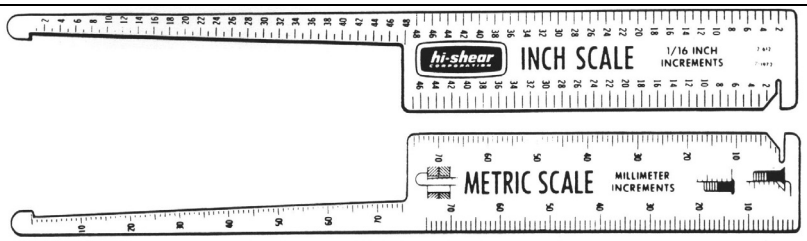

2-612

Klemmlängenlehre, 1 mm Teilung bis 75 mm Klemmlänge
zum Messen der Bohrlochtiefe und Klemmlänge des Nietes
GRIP SCALE, 1/16 INCREMENTS TO 3"
FOR MEASURING DEPTH OF HOLE AND GRIP LENGTH OF FASTENERS

Pin Protrusion Gauges

Lehrensatz (min./max.) zum Überprüfen der richtigen Klemmlänge nach dem Einbau des Hi-Lok/Hi-Lite
PIN PROTRUSION GAGE FOR INSPECTION OF PINS FOR CORRECT GRIP LENGTH

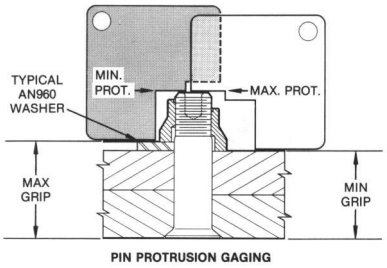

PIN PROTRUSION GAGING

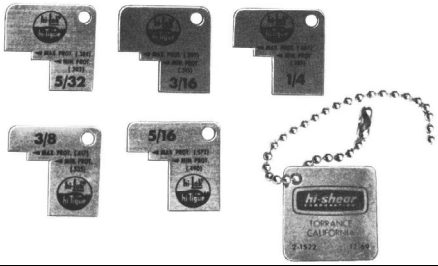

Artikel Nr. PART NO.	**Beschreibung** DESCRIPTION		**Pin Durchmesser** PIN DIAMETERS
2-1522	Hi-Lok/Hi-Tigue	**(Inches)**	5/32”, 3/16” 1/4”, 5/16” and 3/8”
2-1522-2	Hi-Lok/Hi-Tigue	**(Inches)**	7/16“, 1/2“, 9/16“, 5/8“ and 3/4"
2-1522HLM	Hi-Lok/Hi-Tigue	**(Metric)**	4, 5, 6, 8, 10 and 12mm
2-1522HST	Hi-Lite	**(Inches)**	5/32”, 3/16”, 1/4”, 5/16” and 3/8”
2-1522HSTM	Hi-Lite	**(Metric)**	4, 5, 6, 8, 10 and 12mm

Tight Squeeze Hand Tool

The unique "Tight-Squeeze" is a full function hand tool for Hi-Lok fastener installation. This amazing tool does just what the name implies. It gets into tight places, and allows one-handed Hi-Lok installation.

- **Single-Handed operation**
- **Zero backlash or "toothless" ratchet**
- **Cost-effective**



Artikel Nr. PART NO.	**SOCKET SIZE**	**SOCKET PART NUMBER**	**HEX KEY SIZE**	**HEX KEY PART NUBER**
TSQ25-218-062	**7/32**	**ATHS218**	**1/16**	**TSQ-062**
TSQ25-250-062	**1/4**	**ATHS250**	**1/16**	**TSQ-062**
TSQ25-281-062	**9/32**	**ATHS281**	**1/16**	**TSQ-062**
TSQ25-312-062	**5/16**	**ATHS312**	**1/16**	**TSQ-062**
TSQ25-281-079	**9/32**	**ATHS281**	**5/64**	**TSQ-079**
TSQ25-312-079	**5/16**	**ATHS312**	**5/64**	**TSQ-079**
TSQ25-343-079	**11/32**	**ATHS343**	**5/64**	**TSQ-079**
TSQ25-437-079	**7/16**	**ATHS437A**	**5/64**	**TSQ-079**
TSQ25-312-094	**5/16**	**ATHS312**	**3/32**	**TSQ-094**
TSQ25-343-094	**11/32**	**ATHS343**	**3/32**	**TSQ-094**
TSQ25-437-094	**7/16**	**ATHS437A**	**3/32**	**TSQ-094**

Hi-Lok Hand-Einbauwerkzeuge
HI-LOK HAND INSTALLATION TOOLS

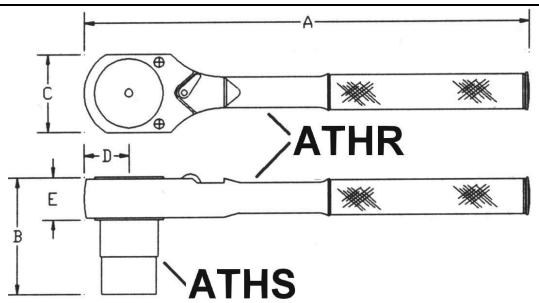

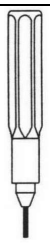

607

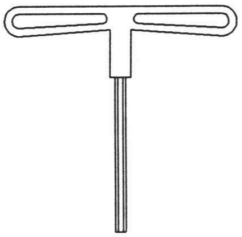

609

kompl. Werkzeug COMPLETE ASSEMBLY	**Nuß-Größe** SOCKET HEX (ATHS)	**Stift-Größe** HEX KEY SIZE (607 & 609)	**A**	**B**	**C**	**D**	**E**	**Ratsche** RATCHET	**Nuß** SOCKET	**Stift-schlüssel** HEX-KEY
ATHA-1	**3/16"** 4,76 mm	**1/16** 1,59 mm	**5"** 127 mm	**1.1/4"** 32 mm	**15/16"** 24 mm	**7/16"** 11 mm	**3/8"** 10 mm	**ATHR250**	**ATHS187**	**607-1/16"**
ATHA-2	**7/32"** 5,56 mm	**1/16** 1,59 mm	**5"** 127 mm	**1.1/4"** 32 mm	**15/16"** 24 mm	**7/16"** 11 mm	**3/8"** 10 mm	**ATHR250**	**ATHS218**	**607-1/16"**
ATHA-3	**1/4"** 6,35 mm	**1/16** 1,59 mm	**5"** 127 mm	**1.1/4"** 32 mm	**15/16"** 24 mm	**7/16"** 11 mm	**3/8"** 10 mm	**ATHR250**	**ATHS250**	**607-1/16"**
ATHA-4	**9/32"** 7,14 mm	**1/16** 1,59 mm	**5"** 127 mm	**1.1/4"** 32 mm	**15/16"** 24 mm	**7/16"** 11 mm	**3/8"** 10 mm	**ATHR250**	**ATHS281**	**607-1/16"**
ATHA-5	**5/16"** 7,94 mm	**1/16** 1,59 mm	**5"** 127 mm	**1.1/4"** 32 mm	**15/16"** 24 mm	**7/16"** 11 mm	**3/8"** 10 mm	**ATHR250**	**ATHS312**	**607-1/16"**
ATHA-6	**11/32"** 8,73 mm	**1/16** 1,59 mm	**5"** 127 mm	**1.1/4"** 32 mm	**15/16"** 24 mm	**7/16"** 11 mm	**3/8"** 10 mm	**ATHR250**	**ATHS343**	**607-1/16"**
ATHA-7	**7/32"** 5,56 mm	**5/64"** 1,98 mm	**5"** 127 mm	**1.1/4"** 32 mm	**15/16"** 24 mm	**7/16"** 11 mm	**3/8"** 10 mm	**ATHR250**	**ATHS218**	**607-5/64"**
ATHA-8	**1/4"** 6,35 mm	**5/64"** 1,98 mm	**5"** 127 mm	**1.1/4"** 32 mm	**15/16"** 24 mm	**7/16"** 11 mm	**3/8"** 10 mm	**ATHR250**	**ATHS250**	**607-5/64"**
ATHA-9	**9/32"** 7,14 mm	**5/64"** 1,98 mm	**5"** 127 mm	**1.1/4"** 32 mm	**15/16"** 24 mm	**7/16"** 11 mm	**3/8"** 10 mm	**ATHR250**	**ATHS281**	**607-5/64"**
ATHA-10	**5/16"** 7,94 mm	**5/64"** 1,98 mm	**5"** 127 mm	**1.1/4"** 32 mm	**15/16"** 24 mm	**7/16"** 11 mm	**3/8"** 10 mm	**ATHR250**	**ATHS312**	**607-5/64"**
ATHA-11	**11/32"** 8,73 mm	**5/64"** 1,98 mm	**5"** 127 mm	**1.1/4"** 32 mm	**15/16"** 24 mm	**7/16"** 11 mm	**3/8"** 10 mm	**ATHR250**	**ATHS343**	**607-5/64"**
ATHA-12A	**3/8"** 9,53 mm	**5/64"** 1,98 mm	**5"** 127 mm	**1.1/4"** 32 mm	**15/16"** 24 mm	**7/16"** 11 mm	**3/8"** 10 mm	**ATHR250**	**ATHS375A**	**607-5/64"**
ATHA-12	**3/8"** 9,53 mm	**5/64"** 1,98 mm	**7"** 178 mm	**1.1/2"** 38 mm	**1.1/4"** 32 mm	**5/8"** 16 mm	**1/2"** 13 mm	**ATHR375**	**ATHS375**	**607-5/64"**
ATHA-13	**5/16"** 7,94 mm	**3/32"** 2,38 mm	**5"** 127 mm	**1.1/4"** 32 mm	**15/16"** 24 mm	**7/16"** 11 mm	**3/8"** 10 mm	**ATHR250**	**ATHS312**	**EH609-3/32"**
ATHA-14	**11/32"** 8,73 mm	**3/32"** 2,38 mm	**5"** 127 mm	**1.1/4"** 32 mm	**15/16"** 24 mm	**7/16"** 11 mm	**3/8"** 10 mm	**ATHR250**	**ATHS343**	**EH609-3/32"**
ATHA-15A	**3/8"** 9,53 mm	**3/32"** 2,38 mm	**5"** 127 mm	**1.1/4"** 32 mm	**15/16"** 24 mm	**7/16"** 11 mm	**3/8"** 10 mm	**ATHR250**	**ATHS375A**	**EH609-3/32"**
ATHA-15	**3/8"** 9,53 mm	**3/32"** 2,38 mm	**7"** 178 mm	**1.1/2"** 38 mm	**1.1/4"** 32 mm	**5/8"** 16 mm	**1/2"** 13 mm	**ATHR375**	**ATHS375**	**EH609-3/32"**
ATHA-16	**7/16"** 11,11 mm	**3/32"** 2,38 mm	**7"** 178 mm	**1.1/2"** 38 mm	**1.1/4"** 32 mm	**5/8"** 16 mm	**1/2"** 13 mm	**ATHR375**	**ATHS437**	**EH609-3/32"**
ATHA-21	**1/2"** 12,7 mm	**3/32"** 2,38 mm	**7"** 178 mm	**1.1/2"** 38 mm	**1.1/4"** 32 mm	**5/8"** 16 mm	**1/2"** 13 mm	**ATHR375**	**ATHS500**	**EH609-3/32"**
ATHA-17	**3/8"** 9,53 mm	**1/8"** 3,18 mm	**7"** 178 mm	**1.1/2"** 38 mm	**1.1/4"** 32 mm	**5/8"** 16 mm	**1/2"** 13 mm	**ATHR375**	**ATHS375**	**EH609-1/8"**
ATHA-18	**7/16"** 11,11 mm	**1/8"** 3,18 mm	**7"** 178 mm	**1.1/2"** 38 mm	**1.1/4"** 32 mm	**5/8"** 16 mm	**1/2"** 13 mm	**ATHR375**	**ATHS437**	**EH609-1/8"**
ATHA-22	**1/2"** 12,7 mm	**1/8"** 3,18 mm	**7"** 178 mm	**1.1/2"** 38 mm	**1.1/4"** 32 mm	**5/8"** 16 mm	**1/2"** 13 mm	**ATHR375**	**ATHS500**	**EH609-1/8"**
ATHA-19	**7/16"** 11,11 mm	**5/32"** 3,97 mm	**7"** 178 mm	**1.1/2"** 38 mm	**1.1/4"** 32 mm	**5/8"** 16 mm	**1/2"** 13 mm	**ATHR375**	**ATHS437**	**EH609-5/32"**
ATHA-20	**1/2"** 12,7 mm	**5/32"** 3,97 mm	**7"** 178 mm	**1.1/2"** 38 mm	**1.1/4"** 32 mm	**5/8"** 16 mm	**1/2"** 13 mm	**ATHR375**	**ATHS500**	**EH609-5/32"**
ATHA-23	**3/8"** 9,53 mm	**5/64"** 1,98 mm	**7"** 178 mm	**1.437"** 37 mm	**1.375"** 35 mm	**0.687"** 18 mm	**0,5"** 13 mm	**ATHR375**	**ATHS375**	**607-5/64"**
ATHA-24	**1/2"** 12,70 mm	**3/32"** 2,38 mm	**7"** 178 mm	**1.5"** 38 mm	**1.375"** 35 mm	**0.687"** 18 mm	**0,5"** 13 mm	**ATHR375**	**ATHS500**	**EH609-3/32"**
ATHA-25	**1/2"** 12,70 mm	**1/8"** 3,18 mm	**7"** 178 mm	**1.5"** 38 mm	**1.375"** 35 mm	**0.687"** 18 mm	**0,5"** 13 mm	**ATHR375**	**ATHS500**	**EH609-1/8"**

Hi-Lok Hand-Einbauwerkzeuge
für große Collar
HI-LOK HAND INSTALLATION TOOLS
FOR LARGE SIZE COLLAR

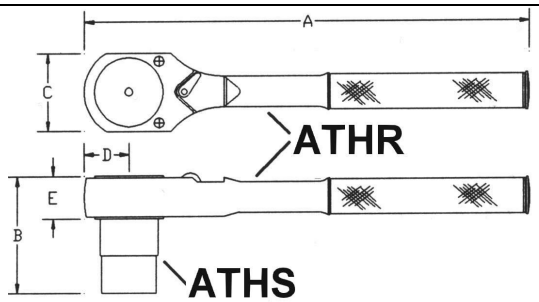

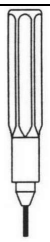

607

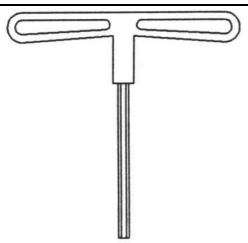

609

kompl. Werkzeug COMPLETE ASSEMBLY	**Nuß-Größe** SOCKET HEX (ATHS)	**Stift-Größe** HEX KEY SIZE (607 & 609)	**A**	**B**	**C**	**D**	**E**	**Ratsche** RATCHET	**Nuß** SOCKET	**Stift-schlüssel** HEX-KEY
ATHA-26	**9/16"** 14,29 mm	**1/8"** 3,18 mm	**10"** 254 mm	**2.187"** 56 mm	**1.75"** 45 mm	**1.75"** 45 mm	**0.687"** 18 mm	**ATHR500**	**ATHS562**	**EH6091/8"**
ATHA-27	**9/16"** 14,29 mm	**5/32"** 3,97 mm	**10"** 254 mm	**2.187** 56 mm	**1.75"** 45 mm	**1.75"** 45 mm	**0.687"** 18 mm	**ATHR500**	**ATHS562**	**EH6095/32"**
ATHA-28	**9/16"** 14,29 mm	**3/16"** 4,76 mm	**10"** 254 mm	**2.187"** 56 mm	**1.75"** 45 mm	**1.75"** 45 mm	**0.687"** 18 mm	**ATHR500**	**ATHS562**	**EH6093/16"**
ATHA-29	**5/8"** 15,88 mm	**5/32"** 3,97 mm	**10"** 254 mm	**2.187"** 56 mm	**1.75"** 45 mm	**1.75"** 45 mm	**0.687"** 18 mm	**ATHR500**	**ATHS625**	**EH6095/32"**
ATHA-30	**11/16"** 17,46 mm	**5/32"** 3,97 mm	**10"** 254 mm	**2.25"** 57 mm	**1.75"** 45 mm	**1.75"** 45 mm	**0.687"** 18 mm	**ATHR500**	**ATHS687**	**EH6095/32"**
ATHA-31	**11/16"** 17,46 mm	**7/32"** 5,56 mm	**10"** 254 mm	**2,25"** 57 mm	**1.75"** 45 mm	**1.75"** 45 mm	**0.687"** 18 mm	**ATHR500**	**ATHS687**	**EH6097/32"**
ATHA-32	**3/4"** 19,05 mm	**3/16"** 4,76 mm	**10"** 254 mm	**2.25"** 57 mm	**1.75"** 45 mm	**1.75"** 45 mm	**0.687"** 18 mm	**ATHR500**	**ATHS750**	**EH6093/16"**
ATHA-33	**7/8"** 22,23 mm	**7/32"** 5,56 mm	**10"** 254 mm	**2.437"** 62 mm	**1.75"** 45 mm	**1.75"** 45 mm	**0.687"** 18 mm	**ATHR500**	**ATHS875**	**EH6097/32"**
ATHA-34	**15/16"** 23,81 mm	**1/4"** 6,35 mm	**20"** 508 mm	**3.125"** 79 mm	**2.625"** 67 mm	**2.625"** 67 mm	**1.125"** 29 mm	**ATHR750**	**ATHS937**	**EH6091/4"**
ATHA-35	**1"** 25,40 mm	**1/4"** 6,35 mm	**20"** 508 mm	**3.125"** 79 mm	**2.625"** 67 mm	**2.625"** 67 mm	**1.125"** 29 mm	**ATHR750**	**ATHS1000**	**EH6091/4"**
ATHA-36	**1.1/8"** 28,58 mm	**5/16"** 7,94 mm	**20"** 508 mm	**3.437"** 87 mm	**2.625"** 67 mm	**2.625"** 67 mm	**1.125"** 29 mm	**ATHR750**	**ATHS1125**	**EH6095/16"**

Nüsse mit Öffnung zum Auswerfen des Sechskants
HEX EJECTING SOCKET

Artikel-Nr. PART NO.	**Größe SIZE**	**Vierkantaufnahme SQUARE DRIVE**	**Gesamtlänge OAL**
CES5/16	5/16“	1/4“	2“ (51mm)
CES11/32	11/32“	1/4“	2“ (51mm)



Hi-Lok Handeinbauwerkzeug
HI-LOK HAND INSTALLATION TOOL
Roller Drive Wrench Assembly



ZRDA80-31



ZRDW80S-250

The Roller Drive Wrench Assemblies are ideal for the installation of any frangible hex collar fastener system such as Hi-Lok, Hi-Lite, Hi-Tigue, Veri-Lite and C-Lok and the removal of any hex nut or hex collar in the most difficult close quarter applications.

Features

- One piece hot forged handle construction for maximum strength.
- Bright yellow knurled handle for easy visibility reducing chance of FOD.
- Minimum edge and height clearance plus a minimum handle swing angle allows easy access to the most restricted close quarter applications.
- The 1/4" square drive spindle and all ZRDS sockets feature a through hole for those applications that require the use of a hex keys.
- The ZRDW roller drive wrench also accepts all standard 1/4" square drive sockets.

All components listed below are completely interchangeable and can be ordered separately or as an assembly.

How To select a tool: To order a complete assembly select the roller drive wrench 6.0" or 3.0" length from the parts list to the rigth. Then select the aappropriate ZRDS socket hex that match the collar or nut hex. Example:

ZRDA80-31 Includes:

- ZRDW80 Roller Drive Wrench 6.0" OAL
- ZRDS-31 5/16" Drive Hex Socket

To order the Roller Drive Wrench equipped with a 1/4" square drive the part numbers are:

ZRDW80S-250 3.0" Handle
ZRDW80-250 6.0" Handle

Socket Hex Size	Complete Tool Part-Number	Roller Drive Wrench Part Number	Socket Part Number
3/16	ZRDA80-18S		ZRDS-18
7/32	ZRDA80-22S	ZRDW80S	ZRDS-22
1/4	ZRDA80-25S		ZRDS-25
9/32	ZRDA80-28S	80 in lbs	ZRDS-28
5/16	ZRDA80-31S		ZRDS-31
11/32	ZRDA80-34S	3" OAL	ZRDS-34
3/8	ZRDA80-37S		ZRDS-37
7/16	ZRDA80-43S		ZRDS-43
3/16	ZRDA80-18		ZRDS-18
7/32	ZRDA80-22	ZRDW80	ZRDS-22
1/4	ZRDA80-25		ZRDS-25
9/32	ZRDA80-28	80 in lbs	ZRDS-28
5/16	ZRDA80-31		ZRDS-31
11/32	ZRDA80-34	6" OAL	ZRDS-34
3/8	ZRDA80-37		ZRDS-37
7/16	ZRDA80-43		ZRDS-43

Torque Wrenches with Thru-Hole for Hi-Lok / Hi-Lite Collar & K-Fast Nuts



Pre-Set Click-Type Torque Wrench Handles with Roller Ratchet® Heads!

This unique torque wrench is great for hard to reach fasteners.

The Roller Ratchet® incorporates a toothless clutch that engages with virtually zero-backlash. Thus the head is effective where very limited handle movement is possible. Wrenches are small & light-weight and are available with 1/4'' square drives for 10 to 250 in-lbs applications, or with 3/8'' square drive for applications between 15 and 300 in-lbs torque.

The square drive is equipped with a thru-hole to accommodate Hex Keys. Various aircraft fastening systems require a hex-key to hold the 'Fastener Pin' while the nut is tightened with the wrench.

These wrenches have been designed to withstand the abuse of modern high production lines and at the same time deliver hundreds of thousands of accurate cycles, each one the same as the one before. These wrenches are made from high alloy steel and scientifically heat treated to deliver the results that are demanded of them. Absolute quality control is exercised during the manufacturing process, assembly process and final test and calibration operations.

Part Number	Min Torque	Max Torque	Square Drive	Description
OMR2T1	10 in./lbs	24 in./lbs	¼”	Pre-set click type torque wrench with Roller Ratchet Head
OMR5T1	15 in./lbs	60 in./lbs	¼”	
OMR5T2	15 in./lbs	60 in./lbs	3/8”	
OMR10T1	36 in./lbs	108 in./lbs	¼”	
OMR10T2	36 in./lbs	108 in./lbs	3/8”	
OMR10ST1	84 in./lbs	250 in./lbs	¼”	
OMR10ST2	84 in./lbs	300 in./lbs	3/8”	

Hi-Lok Ratschen-Ringschlüssel
HI-LOK BOX RATCHET WRENCH

Gerade Ausführung
STRAIGHT TYPE

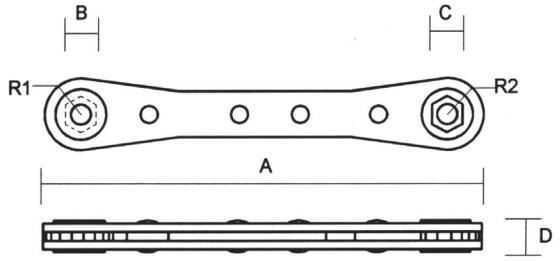

ATBR

nicht umschaltbar / non-reversible

25° abgewinkelte Ausführung
25° OFFSET TYPE

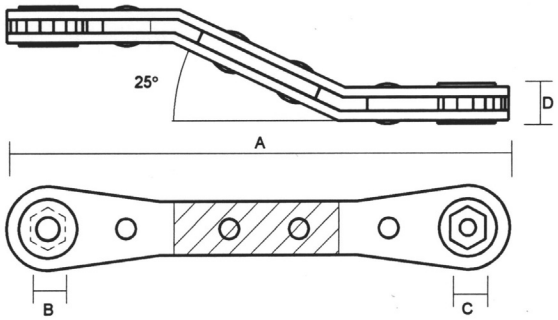

ATBRO

umschaltbar / reversible

Artikel-Nr. PART NO.	A	B	C	D	R1	R2
ATBR-2125	**4.1/4"** 108 mm	**7/32"** 5,56 mm	**1/4"** 6,35 mm	**3/8"** 9,53 mm	**19/64"** 7,54 mm	**21/64"** 8,33 mm
ATBR-2528	**4.1/4"** 108 mm	**1/4"** 6,35 mm	**9/32"** 7,14 mm	**3/8"** 9,53 mm	**19/64"** 7,54 mm	**21/64"** 8,33 mm
ATBR-2531	**4.1/4"** 108 mm	**1/4"** 6,35 mm	**5/16"** 7,94 mm	**3/8"** 9,53 mm	**19/64"** 7,54 mm	**21/64"** 8,33 mm
ATBR-3134	**4.1/4"** 108 mm	**5/16"** 7,94 mm	**11/32"** 8,73 mm	**3/8"** 9,53 mm	**19/64"** 7,54 mm	**21/64"** 8,33 mm
ATBR-3137	**5.1/2"** 140 mm	**5/16"** 7,94 mm	**3/8"** 9,53 mm	**3/8"** 9,53 mm	**25/64"** 9,92 mm	**29/64"** 11,51 mm
ATBR-4350	**5.1/2"** 140 mm	**7/16"** 11,11 mm	**1/2"** 12,7 mm	**3/8"** 9,53 mm	**25/64"** 9,92 mm	**29/64"** 11,51 mm
ATBRO-2125	**4.3/32"** 104 mm	**7/32"** 5,56 mm	**1/4"** 6,35 mm	**3/8"** 9,53 mm	**19/64"** 7,54 mm	**21/64"** 8,33 mm
ATBRO-2528	**4.3/32"** 104 mm	**1/4"** 6,35 mm	**9/32"** 7,14 mm	**3/8"** 9,53 mm	**19/64"** 7,54 mm	**21/64"** 8,33 mm
ATBRO-3134	**4.3/32"** 104 mm	**5/16"** 7,94 mm	**11/32"** 8,73 mm	**3/8"** 9,53 mm	**19/64"** 7,54 mm	**21/64"** 8,33 mm
ATBRO-3137	**5.7/32"** 133 mm	**5/16"** 7,94 mm	**3/8"** 9,53 mm	**3/8"** 9,53 mm	**25/64"** 9,92 mm	**29/64"** 11,51 mm
ATBRO-4350	**5.7/32"** 133 mm	**7/16"** 11,11 mm	**1/2"** 12,7 mm	**3/8"** 9,53 mm	**25/64"** 9,92 mm	**29/64"** 11,51 mm

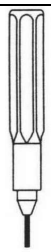

607

Artikel Nr. PART NO.	**Stift-Größe** HEX KEY SIZE
607-1/16"	**1/16"** 1,59 mm
607-5/64"	**5/64"** 1,98 mm
607-3/32"	**3/32"** 2,38 mm

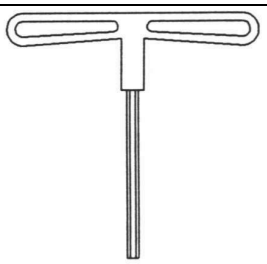

609

Artikel Nr. PART NO.	**Stift-Größe** HEX KEY SIZE
EH609-3/32"	**3/32"** 2,38 mm
EH609-1/8"	**1/8"** 3,18 mm
EH609-5/32"	**5/32"** 3,97 mm
EH609-3/16"	**3/16"** 4,76 mm

Hi-Lok Ratschen-Ringschlüssel mit Auswerfer
HI-LOK BOX RATCHET WRENCH WITH EJECTOR

Gerade Ausführung
STRAIGHT TYPE

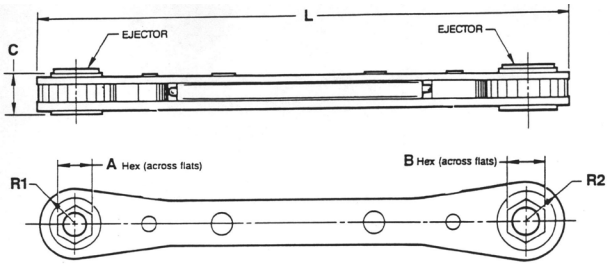

ATBR-( )E

nicht umschaltbar / non-reversible

25° abgewinkelte Ausführung
25° OFFSET TYPE

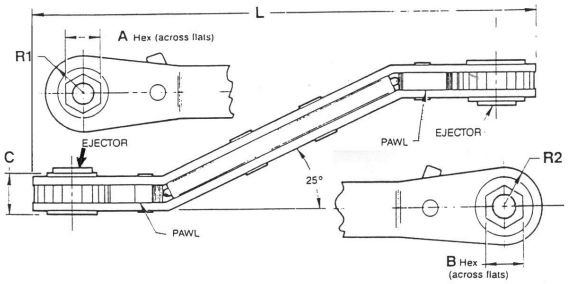

ATBRO-( )E

umschaltbar / reversible

Artikel-Nr. PART NO.	A	B	C	L	R1	R2
ATBR-2125E	**7/32"** 5,56 mm	**1/4"** 6,35 mm	**5/16"** 7,94 mm	**4.3/32"** 104 mm	**19/64"** 7,54 mm	**21/64"** 8,33 mm
ATBR-2528E	**1/4"** 6,35 mm	**9/32"** 7,14 mm	**3/8"** 9,53 mm	**4.3/32"** 104 mm	**19/64"** 7,54 mm	**21/64"** 8,33 mm
ATBR-3134E	**5/16"** 7,94 mm	**11/32"** 8,73 mm	**3/8"** 9,53 mm	**4.3/32"** 104 mm	**19/64"** 7,54 mm	**21/64"** 8,33 mm
ATBR-3137E	**5/16"** 7,94 mm	**3/8"** 9,53 mm	**3/8"** 9,53 mm	**5.7/32"** 133 mm	**25/64"** 9,92 mm	**29/64"** 11,51 mm
ATBR-4350E	**7/16"** 11,11 mm	**1/2"** 12,7 mm	**3/8"** 9,53 mm	**5.7/32"** 133 mm	**25/64"** 9,92 mm	**29/64"** 11,51 mm
ATBRO-2125E	**7/32"** 5,56 mm	**1/4"** 6,35 mm	**5/16"** 7,94 mm	**4.3/32"** 104 mm	**19/64"** 7,54 mm	**21/64"** 8,33 mm
ATBRO-2528E	**1/4"** 6,35 mm	**9/32"** 7,14 mm	**3/8"** 9,53 mm	**4.3/32"** 104 mm	**19/64"** 7,54 mm	**21/64"** 8,33 mm
ATBRO-3134E	**5/16"** 7,94 mm	**11/32"** 8,73 mm	**3/8"** 9,53 mm	**4.3/32"** 104 mm	**19/64"** 7,54 mm	**21/64"** 8,33 mm
ATBRO-3137E	**5/16"** 7,94 mm	**3/8"** 9,53 mm	**3/8"** 9,53 mm	**5.7/32"** 133 mm	**25/64"** 9,92 mm	**29/64"** 11,51 mm
ATBRO-4350E	**7/16"** 11,11 mm	**1/2"** 12,7 mm	**3/8"** 9,53 mm	**5.7/32"** 133 mm	**25/64"** 9,92 mm	**29/64"** 11,51 mm

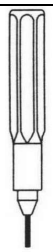

607

Artikel Nr. PART NO.	**Stift-Größe** HEX KEY SIZE
607-1/16"	**1/16"** 1,59 mm
607-5/64"	**5/64"** 1,98 mm
607-3/32"	**3/32"** 2,38 mm

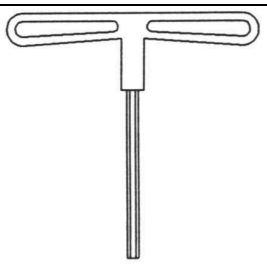

609

Artikel Nr. PART NO.	**Stift-Größe** HEX KEY SIZE
EH609-3/32"	**3/32"** 2,38 mm
EH609-1/8"	**1/8"** 3,18 mm
EH609-5/32"	**5/32"** 3,97 mm
EH609-3/16"	**3/16"** 4,76 mm

Hi-Lok Schnellwechsel-Handeinbauwerkzeug
HI-LOK QUICK CHANGE INSTALLATION HAND ASSEMBLY

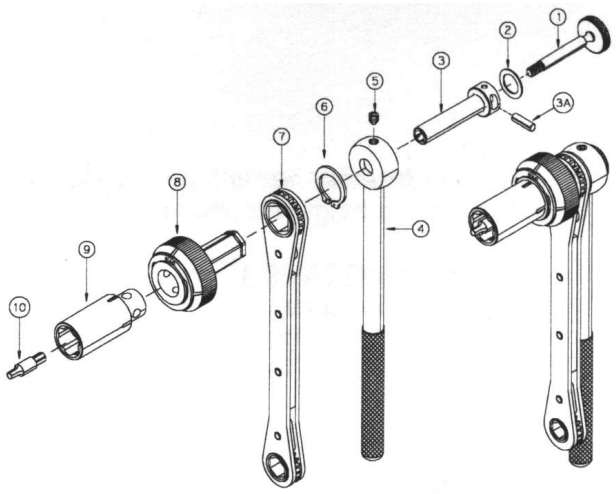

1	= Retention Shaft	QRS-(**E**)
2	= Nylon Washer	HNW100
3	= Holder	QRH-(**E**)
3A	= For use only in hand installation	Keeper Pin
4	= Handle	HLH350
5	= Set Screw	HW103
6	= Retaining Clip	HRC100
7	= Ratchet Wrench	HLR-7
8	= Quick Change Recepticle	QCR-281
9	= Quick Change Installation Socket	QCHS (**xxx**)-(**E**)
10	= Hex Key	QRK-(**H**)

kpl. Einbau-Steckschlüsselsatz CPL. INSTALLATION SOCKET ASSEMBLY	**Steckschlüssel, einzeln** SOCKET ONLY	**Steckschlüssel-Größe** SOCKET HEX SIZE
Pos. / ITEM 1-10	**Pos. / ITEM 9**	**(xxx)**
QCHA 218-(E)-(H)	**QCHS 218-(E)**	**7/32"** (.218) 5,56 mm
QCHA 250-(E)-(H)	**QCHS 250-(E)**	**1/4"** (.250) 6,35 mm
QCHA 281-(E)-(H)	**QCHS 281-(E)**	**9/32"** (.281) 7,14 mm
QCHA 312-(E)-(H)	**QCHS 312-(E)**	**5/16"** (.312) 7,94 mm
QCHA 343-(E)-(H)	**QCHS 343-(E)**	**11/32"** (.343) 8,73 mm
QCHA 375-(E)-(H)	**QCHS 375-(E)**	**3/8"** (.375) 9,53 mm
QCHA 437-(E)-(H)	**QCHS 437-(E)**	**7/16"** (.437) 11,11 mm

(E) = Bitte Kennzahl für Steckschlüssellänge lt. Tabelle angeben (Standard Länge ist 25,4 mm)
(E) = PLEASE SPECIFY DASH # FOR SOCKET LENGTH AS PER TABLE (STANDARD LENGTH IS 1")

(H) = Bitte Kennzahl für Stiftschlüssel-Größe lt. Tabelle angeben
(H) = PLEASE SPECIFY DASH # FOR HEX KEY SIZE AS PER TABLE

(E) **Steckschlüssellänge** SOCKET LENGTH **Kennzahl** / DASH #	**Steckschlüssellänge** SOCKET LENGTH (**Pos.** / ITEM 9)
10	**1.0"** 25,40 mm
20	**2.0"** 50,80 mm
30	**3.0"** 76,20 mm

Artikel-Nr. PART NO. (**Pos.** / ITEM 10)	**(H)** **Kennzahl** DASH #	**Stiftschlüsselgröße** HEX KEY SIZE
QRK-5	**5**	**1/16"** (.062) 1,59 mm
QRK-6	**6**	**5/64"** (.078) 1,98 mm
QRK-8	**8**	**3/32"** (.094) 2,38 mm
QRK-10	**10**	**1/8"** (.125) 3,18 mm

Hi-Lok Schnellwechsel-Steckschlüssel
für den Einbau von Hi-Loks
HI-LOK QUICK CHANGE SOCKET INSTALLATION ASSEMBLY

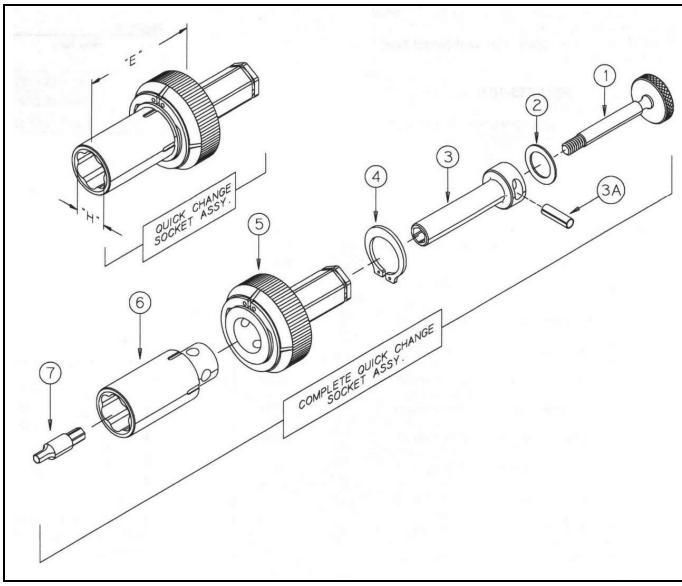

1 =	Retention Shaft	QRS-(**E**)
2 =	Nylon Washer	HNW100
3 =	Holder	QRH-(**E**)
3A =	For use only in hand installation	Keeper Pin
4 =	Retaining Clip	HRC-100
5 =	Quick Change Recepticle	QCR-281
6 =	Quick Change Installation Socket	QCHS(**xxx**)-(**E**)
7 =	Hex Key	QRK-(**H**)

kpl. Einbau-Steckschlüsselsatz CPL. INSTALLATION SOCKET ASSEMBLY	**Steckschlüssel, einzeln** SOCKET ONLY	**Steckschlüssel-Größe** SOCKET HEX SIZE
Pos. / ITEM 1-7	**Pos. / ITEM 6**	**(xxx)**
QCA 218-(E)-(H)	**QCHS 218-(E)**	**7/32"** (.218) 5,56 mm
QCA 250-(E)-(H)	**QCHS 250-(E)**	**1/4"** (.250) 6,35 mm
QCA 281-(E)-(H)	**QCHS 281-(E)**	**9/32"** (.281) 7,14 mm
QCA 312-(E)-(H)	**QCHS 312-(E)**	**5/16"** (.312) 7,94 mm
QCA 343-(E)-(H)	**QCHS 343-(E)**	**11/32"** (.343) 8,73 mm
QCA 375-(E)-(H)	**QCHS 375-(E)**	**3/8"** (.375) 9,53 mm
QCA 437-(E)-(H)	**QCHS 437-(E)**	**7/16"** (.437) 11,11 mm

(E) = Bitte Kennzahl für Steckschlüssellänge lt. Tabelle angeben (Standard Länge ist 25,4 mm)
(E) = PLEASE SPECIFY DASH # FOR SOCKET LENGTH AS PER TABLE (STANDARD LENGTH IS 1")

(H) = Bitte Kennzahl für Stiftschlüssel-Größe lt. Tabelle angeben
(H) = PLEASE SPECIFY DASH # FOR HEX KEY SIZE AS PER TABLE

(E) **Steckschlüssellänge** SOCKET LENGTH **Kennzahl** / DASH #	**Steckschlüssellänge** SOCKET LENGTH (**Pos.** / ITEM 6)
10	**1.0"** 25,40 mm
20	**2.0"** 50,80 mm
30	**3.0"** 76,20 mm

Artikel-Nr. PART NO. (**Pos.** / ITEM 10)	**(H)** **Kennzahl** DASH #	**Stiftschlüsselgröße** HEX KEY SIZE
QRK-5	**5**	**1/16"** (.062) 1,59 mm
QRK-6	**6**	**5/64"** (.078) 1,98 mm
QRK-8	**8**	**3/32"** (.094) 2,38 mm
QRK-10	**10**	**1/8"** (.125) 3,18 mm

Hi-Lok Schnellwechsel-Handausbauwerkzeug
HI-LOK QUICK CHANGE REMOVAL HAND ASSEMBLY

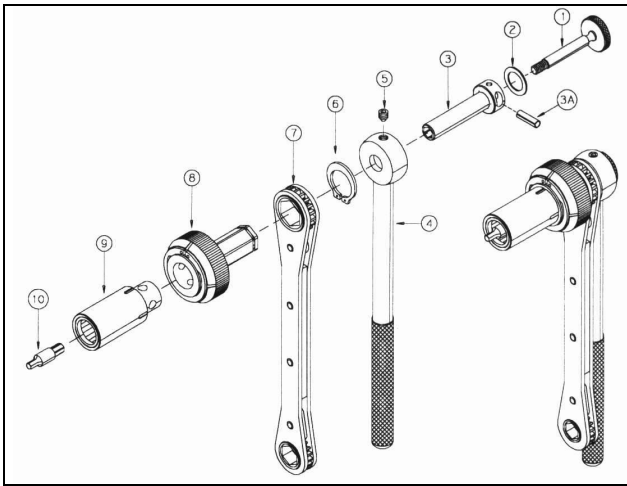

1	= Retention Shaft	QRS-10
2	= Nylon Washer	HNW100
3	= Holder	QRH-10
3A	= For use only in hand installation	Keeper Pin
4	= Handle	HLH350
5	= Set Screw	HW103
6	= Retaining Clip	HRC100
7	= Ratchet Wrench	HLR-7
8	= Quick Change Recepticle	QCR-281
9	= Quick Change Removal Socket	QCHR **(xxx)**-10
10	= Hex Key	QRK**-(H)**

kpl. Ausbau-Steckschlüsselsatz CPL. REMOVAL SOCKET ASSEMBLY	**Steckschlüssel einzeln** SOCKET ONLY	**Klemmbereich des Steckschlüssel** GRIP RANGE OF SOCKET	
Artikel-Nr. / PART NO. **Pos. / ITEM 1-10**	**Artikel-Nr.** / PART NO. **Pos. / ITEM 9**	**Inch**	**mm**
QCHRA 235-10-(H)	**QCHR 235-10**	0.235-0.255	5,97-6,48
QCHRA 245-10-(H)	**QCHR 245-10**	0.245-0.265	6,22-6,73
QCHRA 255-10-(H)	**QCHR 255-10**	0.255-0.275	6,48-6,99
QCHRA 265-10-(H)	**QCHR 265-10**	0.265-0.285	6,73-7,24
QCHRA 275-10-(H)	**QCHR 275-10**	0.275-0.295	6,99-7,49
QCHRA 285-10-(H)	**QCHR 285-10**	0.285-0.305	7,24-7,75
QCHRA 295-10-(H)	**QCHR 295-10**	0.295-0.315	7,49-8,00
QCHRA 305-10-(H)	**QCHR 305-10**	0.305-0.325	7,75-8,26
QCHRA 315-10-(H)	**QCHR 315-10**	0.315-0.335	8,00-8,51
QCHRA 325-10-(H)	**QCHR 325-10**	0.325-0.345	8,26-8,76
QCHRA 335-10-(H)	**QCHR 335-10**	0.335-0.355	8,51-9,02
QCHRA 355-10-(H)	**QCHR 355-10**	0.355-0.375	9,02-9,53
QCHRA 375-10-(H)	**QCHR 375-10**	0.375-0.395	9,53-10,03
QCHRA 395-10-(H)	**QCHR 395-10**	0.395-0.415	10,03-10,54

Standard-Länge (-10) ist 25,4 mm - Sonderlängen nur auf Anfrage
STANDARD LENGTH (-10) IS 1" - SPECIAL LENGTH ONLY ON REQUEST

(H) = Bitte Kennzahl für Stiftschlüssel-Größe lt. Tabelle angeben
(H) = PLEASE SPECIFY DASH # FOR HEX KEY SIZE AS PER TABLE

Artikel-Nr. / PART NO. (**Pos.** / ITEM 10)	**(H)** **Kennzahl** / DASH #	**Stiftschlüsselgröße** HEX KEY SIZE
QRK-5	**5**	**1/16"** (.062) 1,59 mm
QRK-6	**6**	**5/64"** (.078) 1,98 mm
QRK-8	**8**	**3/32"** (.094) 2,38 mm
QRK-10	**10**	**1/8"** (.125) 3,18 mm

Hi-Lok-Collar Schnellwechsel-Steckschlüssel Ausbau-System
HI-LOK-COLLAR QUICK CHANGE SOCKET REMOVAL SYSTEM

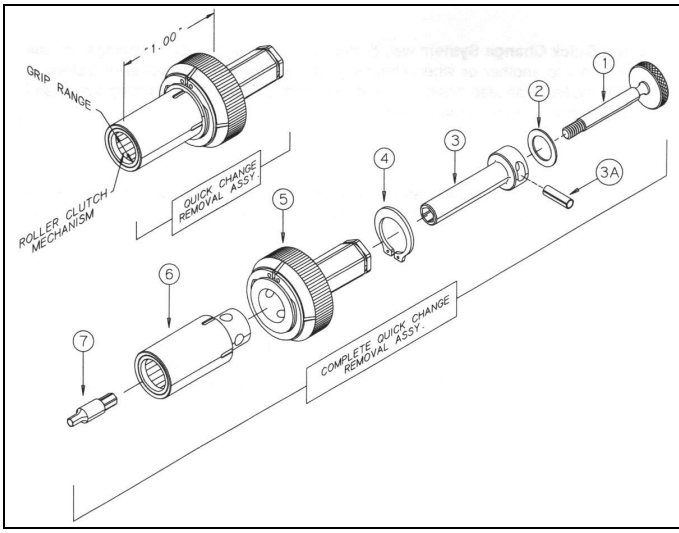

1	= Retention Shaft	QRS-10
2	= Nylon Washer	HNW100
3	= Holder	QRH-10
3A	= For use only in hand installation	Keeper Pin
4	= Retaining Clip	HRC-100
5	= Quick Change Recepticle	QCR-281
6	= Quick Change Removal Socket	QCHRS(**xxx**)-10
7	= Hex Key	QRK-(**H**)

kpl. Ausbau-Steckschlüssel CPL. REMOVAL SOCKET ASSEMBLY	**Steckschlüssel einzeln** SOCKET ONLY	**Klemmbereich des Steckschlüssel** GRIP RANGE OF SOCKET	
Pos. / ITEM 1-7	**Pos. / ITEM 6**	**Inch**	**mm**
QCRA 235-10-(H)	**QCHR 235-10**	0.235-0.255	5,97-6,48
QCRA 245-10-(H)	**QCHR 245-10**	0.245-0.265	6,22-6,73
QCRA 255-10-(H)	**QCHR 255-10**	0.255-0.275	6,48-6,99
QCRA 265-10-(H)	**QCHR 265-10**	0.265-0.285	6,73-7,24
QCRA 275-10-(H)	**QCHR 275-10**	0.275-0.295	6,99-7,49
QCRA 285-10-(H)	**QCHR 285-10**	0.285-0.305	7,24-7,75
QCRA 295-10-(H)	**QCHR 295-10**	0.295-0.315	7,49-8,00
QCRA 305-10-(H)	**QCHR 305-10**	0.305-0.325	7,75-8,26
QCRA 315-10-(H)	**QCHR 315-10**	0.315-0.335	8,00-8,51
QCRA 325-10-(H)	**QCHR 325-10**	0.325-0.345	8,26-8,76
QCRA 335-10-(H)	**QCHR 335-10**	0.335-0.355	8,51-9,02
QCRA 355-10-(H)	**QCHR 355-10**	0.355-0.375	9,02-9,53
QCRA 375-10-(H)	**QCHR 375-10**	0.375-0.395	9,53-10,03
QCRA 395-10-(H)	**QCHR 395-10**	0.395-0.415	10,03-10,54

Standard-Länge ist 25,4 mm - Sonderlängen nur auf Anfrage
STANDARD LENGTH IS 1" - SPECIAL LENGTH ONLY ON REQUEST

(H) = Bitte Kennnzahl für Stiftschlüssel-Größe lt. Tabelle angeben
(H) = PLEASE SPECIFY DASH # FOR HEX KEY SIZE AS PER TABLE

Artikel-Nr. / PART NO. (**Pos.** / ITEM 7)	**(H)** **Kennzahl** / DASH #	**Stiftschlüsselgröße** HEX KEY SIZE
QRK-5	**5**	**1/16"** (.062) 1,59 mm
QRK-6	**6**	**5/64"** (.078) 1,98 mm
QRK-8	**8**	**3/32"** (.094) 2,38 mm
QRK-10	**10**	**1/8"** (.125) 3,18 mm

Hi-Lok Einbau-Werkzeugsatz
HI-LOK INSTALLATION TOOL KIT

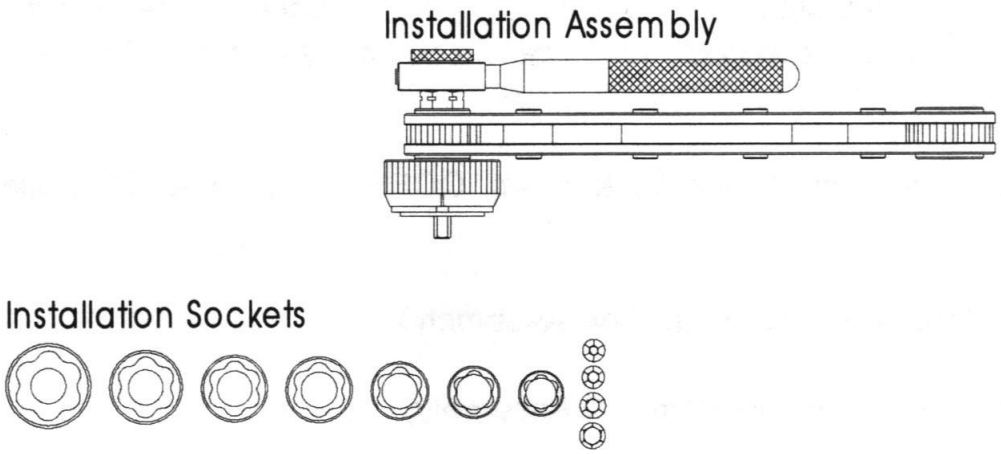

QCK-4050

Inhalt / CONTENTS:	**Artikel-Nr.** PART NO.
Aufbewahrungskasten / CASE	**---**
Hand-Einbauwerkzeug mit Adapter für Steckschlüssel HAND-INSTALLATION TOOL WITH RECEPTICLE FOR SOCKETS	**QCHA932**
Einbau-Steckschlüsselsatz (7 tlg.) inkl. 4 QRK-Stiftschlüssel Installation Socket Set (7 pcs.) incl. 4 QRK Hex-Keys	**QCSS22-43-10**

QCSS 22-43-10 **bestehend aus/**EXIST OF: **Einbau-Steckschlüssel** INSTALLATION SOCKET	**Größe** HEX SIZE				**Stiftschlüssel** HEX KEY
QCHS 218-10	**7/32"**	(.218)	5,56 mm		**QRK-5** (1/16")
QCHS 250-10	**1/4"**	(.250)	6,35 mm		**QRK-6** (5/64")
QCHS 281-10	**9/32"**	(.281)	7,14 mm		**QRK-8** (3/32")
QCHS 312-10	**5/16"**	(.312)	7,94 mm		**QRK-10** (1/8")
QCHS 343-10	**11/32"**	(.343)	8,73 mm		
QCHS 375-10	**3/8"**	(.375)	9,53 mm		
QCHS 437-10	**7/16"**	(.437)	11,11 mm		

Standard Steckschlüssellänge ist 25,4 mm - STANDARD SOCKET LENGTH IS 1"

Hi-Lok Ausbau-Werkzeugsatz
HI-LOK REMOVAL TOOL KIT

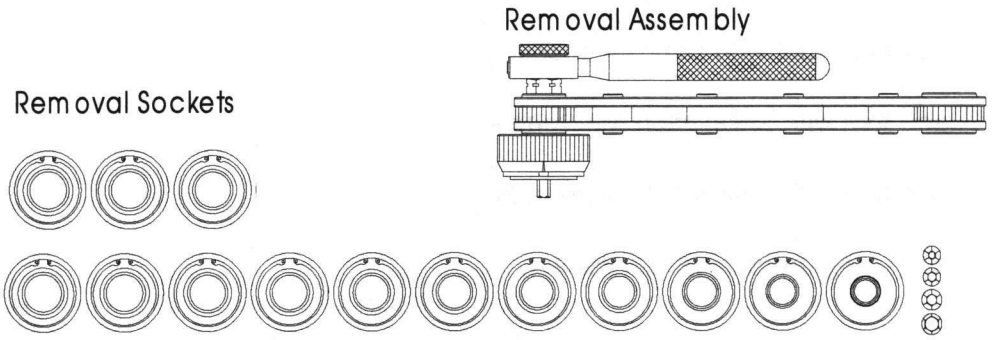

QCK-4060

Inhalt / CONTENTS:	**Artikel-Nr.** PART NO.
Aufbewahrungskasten / CASE	**---**
Hand-Ausbauwerkzeug mit Adapter für Steckschlüssel HAND-REMOVAL TOOL WITH RECEPTICLE FOR SOCKETS	**QCHRA932**
Ausbau-Steckschlüsselsatz (14 tlg.) inkl. 4 QRK-Stiftschlüssel Removal Socket Set (14 pcs.) incl. 4 QRK Hex-Keys	**QCRSS23-43**

QCRSS 23-43 **bestehend aus/**EXIST OF: **Ausbau-Steckschlüssel** REMOVAL SOCKET	**Klemmbereich des Steckschlüssel** GRIP RANGE OF SOCKET **Inch**	**mm**	**Stiftschlüssel** HEX KEY
QCHR 235-10	0.235-0.255	5,97-6,48	
QCHR 245-10	0.245-0.265	6,22-6,73	**QRK-5** (1/16")
QCHR 255-10	0.255-0.275	6,48-6,99	**QRK-6** (5/64")
QCHR 265-10	0.265-0.285	6,73-7,24	**QRK-8** (3/32")
QCHR 275-10	0.275-0.295	6,99-7,49	**QRK-10** (1/8")
QCHR 285-10	0.285-0.305	7,24-7,75	
QCHR 295-10	0.295-0.315	7,49-8,00	
QCHR 305-10	0.305-0.325	7,75-8,26	
QCHR 315-10	0.315-0.335	8,00-8,51	
QCHR 325-10	0.325-0.345	8,26-8,76	
QCHR 335-10	0.335-0.355	8,51-9,02	
QCHR 355-10	0.355-0.375	9,02-9,53	
QCHR 375-10	0.375-0.395	9,53-10,03	
QCHR 395-10	0.395-0.415	10,03-10,54	

Standard Steckschlüssellänge ist 25,4 mm - STANDARD SOCKET LENGTH IS 1"

Hi-Lok Ein- und Ausbau-Werkzeugsatz
HI-LOK INSTALLATION & REMOVAL TOOL KIT

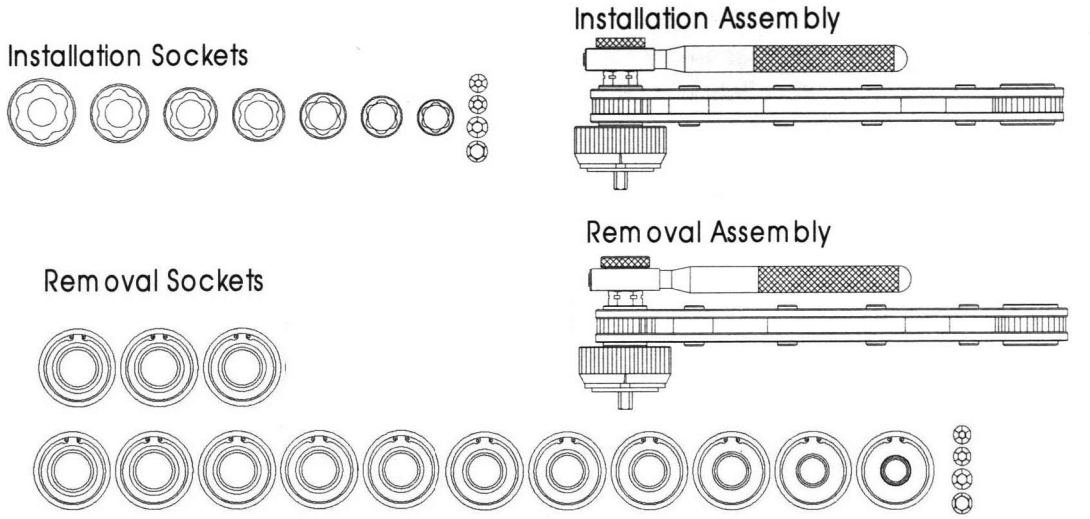

QCK-4040

Inhalt / CONTENTS:	
Hand-Einbauwerkzeug mit Adapter für Steckschlüssel HAND-INSTALLATION TOOL WITH RECEPTICLE FOR SOCKETS	**QCHA932**
Hand-Ausbauwerkzeug mit Adapter für Steckschlüssel HAND-REMOVAL TOOL WITH RECEPTICLE FOR SOCKETS	**QCHRA932**
Einbau-Steckschlüsselsatz (7 tlg.) inkl. 4 QRK-Stiftschlüssel Installation Socket Set (7 pcs.) incl. 4 QRK Hex-Keys	**QCSS22-43-10**
Ausbau-Steckschlüsselsatz (14 tlg.) inkl. 4 QRK-Stiftschlüssel Removal Socket Set (14 pcs.) incl. 4 QRK Hex-Keys	**QCRSS23-43**

QCSS 22-43-10 **bestehend aus/**EXIST OF: **Einbau-Steckschlüssel** INSTALLATION SOCKET	**Größe** HEX SIZE
QCHS 218-10	**7/32"** (.218) 5,56 mm
QCHS 250-10	**1/4"** (.250) 6,35 mm
QCHS 281-10	**9/32"** (.281) 7,14 mm
QCHS 312-10	**5/16"** (.312) 7,94 mm
QCHS 343-10	**11/32"** (.343) 8,73 mm
QCHS 375-10	**3/8"** (.375) 9,53 mm
QCHS 437-10	**7/16"** (.437) 11,11 mm

Stiftschlüssel / HEX KEY	**Größe** / HEX SIZE
QRK-5	1/16"
QRK-6	5/64"
QRK-8	3/32"
QRK-10	1/8"

QCRSS 23-43 **bestehend aus/**EXIST OF: **Ausbau-Steckschlüssel** REMOVAL SOCKET	**Klemmbereich des Steckschlüssel** GRIP RANGE OF SOCKET **Inch**	**mm**
QCHR 235-10	0.235-0.255	5,97-6,48
QCHR 245-10	0.245-0.265	6,22-6,73
QCHR 255-10	0.255-0.275	6,48-6,99
QCHR 265-10	0.265-0.285	6,73-7,24
QCHR 275-10	0.275-0.295	6,99-7,49
QCHR 285-10	0.285-0.305	7,24-7,75
QCHR 295-10	0.295-0.315	7,49-8,00
QCHR 305-10	0.305-0.325	7,75-8,26
QCHR 315-10	0.315-0.335	8,00-8,51
QCHR 325-10	0.325-0.345	8,26-8,76
QCHR 335-10	0.335-0.355	8,51-9,02
QCHR 355-10	0.355-0.375	9,02-9,53
QCHR 375-10	0.375-0.395	9,53-10,03
QCHR 395-10	0.395-0.415	10,03-10,54

Standard Steckschlüssellänge ist 25,4 mm - STANDARD SOCKET LENGTH IS 1"

Hi-Lok Collar Ausbau-Werkzeuge
HI-LOK COLLAR REMOVAL TOOLS

SAVI SOCKET





SAVI-568-RED

Hi-Lok® 6-piece Set (¼" Sq. Dr.)

This is a "Starter Set" that contains Savi-Sockets for 75-85% of the Hi-Lok® collars typically encountered in routine aircraft maintenance, including the most frequently encountered collars: the HL70, and the HL79 series "red" collars. This set will remove a number of other collars, but is not as comprehensive as the set below.

SAVI-568-HL

Hi-Lok® and Hi-Lite® 12-piece Set (¼" Sq. Dr.)

This is the comprehensive set of Savi-Sockets, providing sizes for the majority of Hi-Lok® and Hi-Lite® collars.

SAVI-568-RED (6-piece set)	SAVI-568-HL (12 piece set)	Nominal Collar Size	Collar "Dash" Number	Square Drive Size	Top of Collar Diamter	
					MM	INCH
	SAVI-24	5/32, 3/16"EB	5 & 6 EB	1/4"	6,2 mm	0.24
SAVI-25	SAVI-25	5/32"	5	1/4"	6,5 mm	0.25
SAVI-26	SAVI-26	5/32 & 3/16	5, 6	1/4"	6,7 mm	0.26
SAVI-27	SAVI-27	5/32 & 3/17	5, 6	1/4"	7,0 mm	0.27
	SAVI-28	3/16"	6	1/4"	7,2 mm	0.28
SAVI-29	SAVI-29	3/16"	6	1/4"	7,5 mm	0.29
	SAVI-32	1/4", 1/4EB	8 & 8 EB	1/4"	8,2 mm	0.32
	SAVI-33	1/4"	8	1/4"	8,5 mm	0.33
	SAVI-34	1/4"	8	1/4"	8,7 mm	0.34
	SAVI-35	1/4"	8	1/4"	9,0 mm	0.35
SAVI-36	SAVI-36	1/4"	8	1/4"	9,2 mm	0.36
SAVI-37	SAVI-37	1/4"	8	1/4"	9,5 mm	0.37



Hi-Lok Collar Ausbau-Werkzeuge
HI-LOK COLLAR REMOVAL TOOLS

Mit Innenvierkant-Aufnahme 9,53 mm / WITH 3/8" INSIDE SQUARE DRIVE

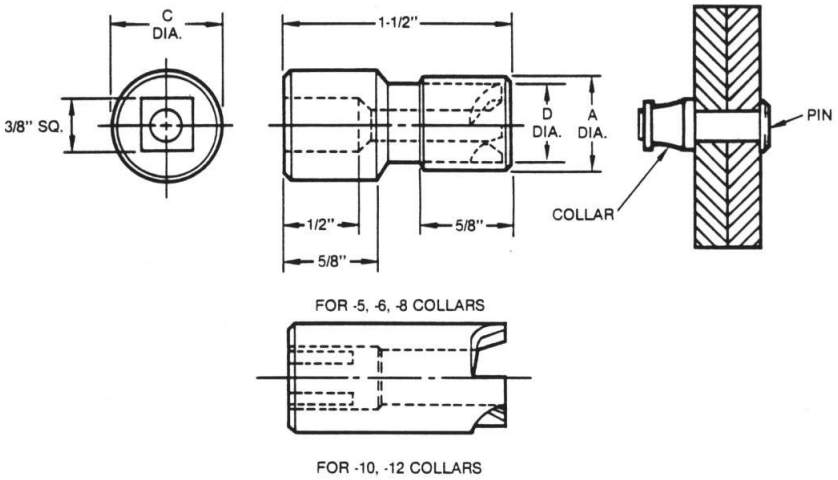

HLC1

Artikel-Nr. PART NO.	**Größen-Nr.** DASH NO.	**Nenngröße** PIN NOM. DIA.	**A**		**C**		**D**	
HLC1-5	**-5**	**5/32"** (4,0 mm)	**5/8"**	15,88 mm	**3/4"**	19,05 mm	**1/2"**	12,70 mm
HLC1-6	**-6**	**3/16"** (4,8 mm)	**5/8"**	15,88 mm	**3/4"**	19,05 mm	**1/2"**	12,70 mm
HLC1-8	**-8**	**1/4"** (6,4 mm)	**13/16"**	20,64 mm	**3/4"**	19,05 mm	**11/16"**	17,46 mm
HLC1-10	**-10**	**5/16"** (8,0 mm)		---	**3/4"**	19,05 mm	**3/4"**	19,05 mm
HLC1-12	**-12**	**3/8"** (9,5 mm)		---	**7/8"**	22,23 mm	**7/8"**	22,23 mm

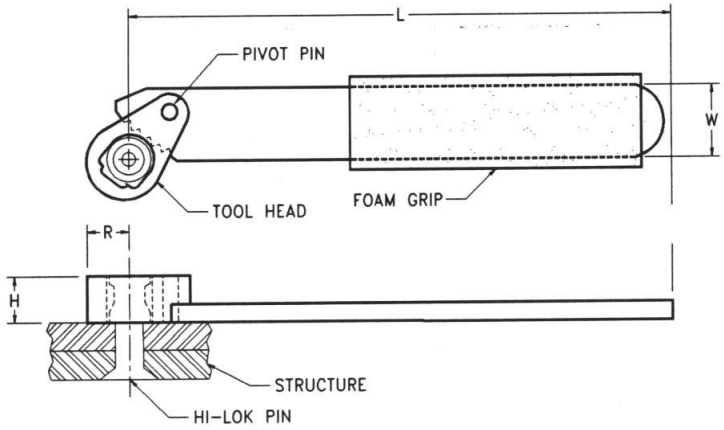

REM100

Artikel-Nr. PART NO.	**Größen-Nr.** DASH NO.	**Nenngröße** PIN NOM. DIA.	**H**		**R**		**L**		**W**	
REM100-56T	**-5**	**5/32"** (4,0 mm)	**0.25**	6,35 mm	**0.28**	7,11 mm	**5.60**	142,2 mm	**0.42**	10,67 mm
REM100-56T	**-6**	**3/16"** (4,8 mm)	**0.25**	6,35 mm	**0.28**	7,11 mm	**5.60**	142,2 mm	**0.42**	10,67 mm
REM100-8T	**-8**	**1/4"** (6,4 mm)	**0.31**	7,87 mm	**0.35**	8,89 mm	**5.80**	147,3 mm	**0.55**	13,97 mm
REM100-10T	**-10**	**5/16"** (8,0 mm)	**0.38**	9,65 mm	**0.43**	10,92 mm	**6.90**	175,3 mm	**0.67**	17,02 mm
REM100-12T	**-12**	**3/8"** (9,5 mm)	**0.38**	9,65 mm	**0.55**	14,03 mm	**7.90**	200,7 mm	**0.75**	19,05 mm
REM100-14T	**-14**	**7/16"** (11,0 mm)	**0.50**	12,70 mm	**0.61**	15,49 mm	**9.90**	251,5 mm	**0.95**	24,13 mm

Hi-Lok Collar Ausbau-Zangen
HI-LOK COLLAR REMOVAL PLIERS



2979D-180

Gesamtlänge ca. 180 mm OVERALL LENGTH APPR. 7.1/4 INCH **Für Collar ab 4,0 mm Außendurchmesser** **FOR COLLAR WITH MIN. 5/32" OUTSIDE DIAMETER**	**Nur für weiche Werkstoffe wie** **Aluminium und weicher Stahl** ONLY FOR SOFT MATERIALS SUCH AS ALUMINIUM AND MILD STEEL



EH-3579 (ZHP-100)

Gesamtlänge ca. 180 mm OVERALL LENGTH APPR. 7.1/4 INCH **Für Collar ab 6,3 mm Außendurchmesser** FOR COLLAR WITH MIN. 1/4" OUTSIDE DIAMETER	**Alle weichen und harten Werkstoffe wie** **Aluminium, Titan und Edelstahl** ALL MATERIALS SUCH AS ALUMINIUM, TITANIUM AND STAINLESS STEEL



ZHP-200

Gesamtlänge ca. 225 mm OVERALL LENGTH APPR. 8.27/32 INCH **Für Collar ab 12,5 mm Außendurchmesser** FOR COLLAR WITH MIN. 1/2" OUTSIDE DIAMETER	**Alle weichen und harten Werkstoffe wie** **Aluminium, Titan und Edelstahl** ALL MATERIALS SUCH AS ALUMINIUM, TITANIUM AND STAINLESS STEEL

Hi-Lok / Hi-Lite Handeinbauwerkzeuge mit Drehmomentsteuerung
HI-LOK / HI-LITE INSTALLATION TOOLS WITH TORQUE CONTROL

Tools Configurations:
The Lok-Fast Torque Control Tools come in several configurations allowing for the operator to choose the tool best designed for his needs.

Versatility:
All the heads are designed to be 360 degree indexable and give a consitant torque at any angle.

Ease of Use:
The QRS® Sockets allow for the quick and easy installation and removal of the hex tip with out the need for any other tooling. This eliminates excess down time and keeps the tool on the job longer.

Indexing Feature:
The tools are fully indexable (360°). No extra tooling is required to utilize the indexing mechanism, allowing for quick adjustments and increased versatility.

LTC12, LTC13 & LTC14 Series*



LTC22, LTC23 & LTC24 Series*



LTC300 Series*



LTC42, LTC43 & LTC44 Series*



LTC52, LTC53 & LTC54 Series*



LTC600 Series*



Cordless Electric Tooling Systems

New Cordless Electric tools with Torque Control Fastening bring to you the following benefits:

- Ergonomic
- Convenience
- Accuracy
- Wide range of process monitoring at real time capabilities
- Different Tool Brands as Makita, Atlas Copco, Ingersoll-Rand and Bosch

LTCB Series



Torque Rating:
T2 = 15 to 25
T3 = 26 to 55
T4 = 40 to 80
T5 = 80 to 120

Quick Release System
For use with **LTC600** Series
(Right Angle)



H	Head Offset
3	0.95"
5	2.10"
7	3.44"
9	4.78"

T	Torque Range
T2	15 to 25 in - lbs
T3	26 to 55 in - lbs
T4	40 to 80 in - lbs
T5	80 to 120 in - lbs

Hex Tip	Socket Hex
1/16	7/32 1/4 9/32 5/16 11/32
5/64	7/32 1/4 9/32 5/16 11/32 3/8
3/32	5/16 11/32 3/8 7/16

X	Socket Length
-	flush
B	0.5"
D	1.0"
F	1.5"
H	2.0"
L	3.0"
P	4.0"

Ordering example:
1. Select Basic Tool
2. Select the Head Offset required (H) **
3. Select Nut Setting Torque (T)
4. Select the Socket Hex Size
5. Select the Socket Length required (x)
6. Select the Hex Tip required
7. Combine Part Numbers as Shown Below

LTC125T2-25B5
(Example Extended socket)
1. **LTC12** - Basic Tool
2. **5** - 2.10" Offset **
3. **T2** - 15 to 25 in-lbs. Torque Range
4. **25** - 1/4" Socket Hex
5. **B** - 1/2" Long Extended Socket
6. **5** - 1/16" Hex Tip

Available also with Aster Key

*** Head Offset, Torque Range and Socket Length are different for each series. Please request complete series datasheet before ordering!**

**** Tools with Head Offset only**

Weitere Informationen auf Anfrage
MORE INFORMATION ON REQUEST

Hi-Lok Einbau-Werkzeugsatz
HI-LOK INSTALLATION TOOL KIT

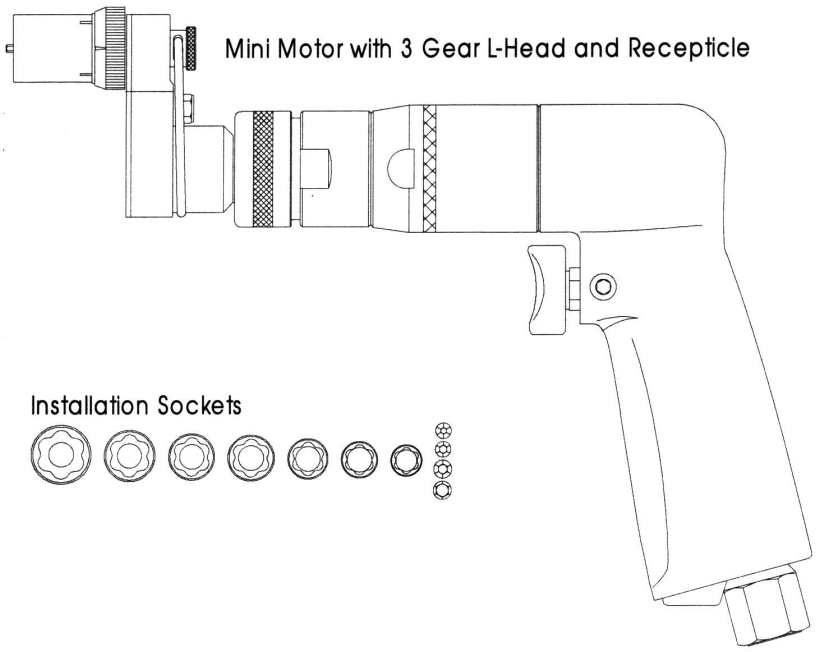

QCK-4020

Inhalt / CONTENTS:	**Artikel-Nr.** PART NO.
Aufbewahrungskasten / CASE	**---**
Pneum. Mini Schrauber mit kleinem Winkelkopf und Adapter für Steckschlüssel PNEUM. MINI MOTOR WITH 3 GEAR L-HEAD AND RECEPTICLE FOR SOCKETS	**MQCLA43S-10**
Einbau-Steckschlüsselsatz (7 tlg.) inkl. 4 QRK-Stiftschlüssel Installation Socket Set (7 pcs.) incl. 4 QRK Hex-Keys	**QCSS22-43-10**

QCSS 22-43-10 **bestehend aus/**EXIST OF: **Einbau-Steckschlüssel** INSTALLATION SOCKET	**Größe** HEX SIZE	**Stiftschlüssel** HEX KEY
QCHS 218-10	**7/32"** (.218) 5,56 mm	**QRK-5** (1/16")
QCHS 250-10	**1/4"** (.250) 6,35 mm	**QRK-6** (5/64")
QCHS 281-10	**9/32"** (.281) 7,14 mm	**QRK-8** (3/32")
QCHS 312-10	**5/16"** (.312) 7,94 mm	**QRK-10** (1/8")
QCHS 343-10	**11/32"** (.343) 8,73 mm	
QCHS 375-10	**3/8"** (.375) 9,53 mm	
QCHS 437-10	**7/16"** (.437) 11,11 mm	

Standard Steckschlüssellänge ist 25,4 mm STANDARD SOCKET LENGTH IS 1"

Hi-Lok Ausbau-Werkzeugsatz
HI-LOK REMOVAL TOOL KIT

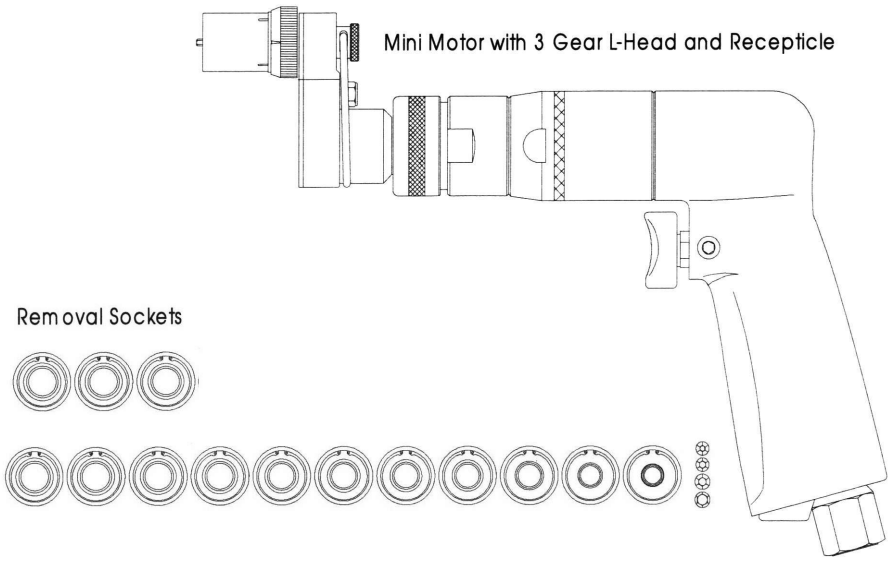

QCK-4030

Inhalt / CONTENTS:	**Artikel-Nr.** PART NO.
Aufbewahrungskasten / CASE	**---**
Pneum. Mini Schrauber mit kleinem Winkelkopf und Adapter für Steckschlüssel PNEUM. MINI MOTOR WITH 3 GEAR L-HEAD AND RECEPTICLE FOR SOCKETS	**MQCLA43S-10**
Ausbau-Steckschlüsselsatz (14 tlg.) inkl. 4 QRK-Stiftschlüssel Removal Socket Set (14 pcs.) incl. 4 QRK Hex-Keys	**QCRSS23-43**

QCRSS 23-43 **bestehend aus/**EXIST OF: **Ausbau-Steckschlüssel** REMOVAL SOCKET	**Klemmbereich des Steckschlüssel** GRIP RANGE OF SOCKET			**Stiftschlüssel** HEX KEY
	Inch	**mm**		
QCHR 235-10	0.235-0.255	5,97-6,48		
QCHR 245-10	0.245-0.265	6,22-6,73		**QRK-5** (1/16")
QCHR 255-10	0.255-0.275	6,48-6,99		**QRK-6** (5/64")
QCHR 265-10	0.265-0.285	6,73-7,24		**QRK-8** (3/32")
QCHR 275-10	0.275-0.295	6,99-7,49		**QRK-10** (1/8")
QCHR 285-10	0.285-0.305	7,24-7,75		
QCHR 295-10	0.295-0.315	7,49-8,00		
QCHR 305-10	0.305-0.325	7,75-8,26		
QCHR 315-10	0.315-0.335	8,00-8,51		
QCHR 325-10	0.325-0.345	8,26-8,76		
QCHR 335-10	0.335-0.355	8,51-9,02		
QCHR 355-10	0.355-0.375	9,02-9,53		
QCHR 375-10	0.375-0.395	9,53-10,03		
QCHR 395-10	0.395-0.415	10,03-10,54		

Standard Steckschlüssellänge ist 25,4 mm - STANDARD SOCKET LENGTH IS 1"

Hi-Lok Ein- und Ausbau-Werkzeugsatz
HI-LOK INSTALLATION & REMOVAL TOOL KIT

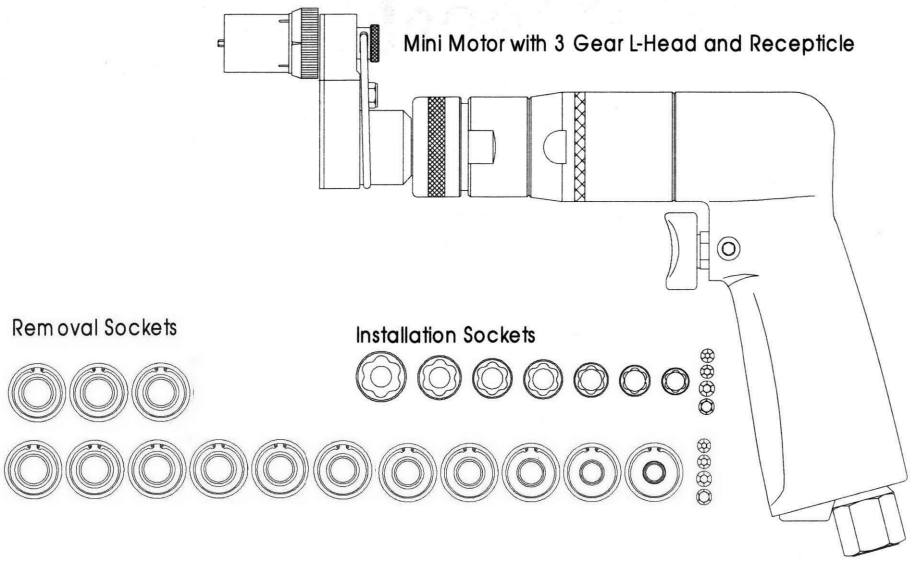

QCK-4010

Inhalt / CONTENTS:	**Artikel-Nr.** PART NO.
Aufbewahrungskasten / CASE	**---**
Pneum. Mini Schrauber mit kleinem Winkelkopf und Adapter für Steckschlüssel PNEUM. MINI MOTOR WITH 3 GEAR L-HEAD AND RECEPTICLE FOR SOCKETS	**MQCLA43S-10**
Einbau-Steckschlüsselsatz (7 tlg.) inkl. 4 QRK-Stiftschlüssel Installation Socket Set (7 pcs.) incl. 4 QRK Hex-Keys	**QCSS22-43-10**
Ausbau-Steckschlüsselsatz (14 tlg.) inkl. 4 QRK-Stiftschlüssel Removal Socket Set (14 pcs.) incl. 4 QRK Hex-Keys	**QCRSS23-43**

QCSS 22-43-10 **bestehend aus/**EXIST OF: **Einbau-Steckschlüssel** INSTALLATION SOCKET	**Größe** HEX SIZE
QCHS 218-10	**7/32"** (.218) 5,56 mm
QCHS 250-10	**1/4"** (.250) 6,35 mm
QCHS 281-10	**9/32"** (.281) 7,14 mm
QCHS 312-10	**5/16"** (.312) 7,94 mm
QCHS 343-10	**11/32"** (.343) 8,73 mm
QCHS 375-10	**3/8"** (.375) 9,53 mm
QCHS 437-10	**7/16"** (.437) 11,11 mm

Stiftschlüssel / HEX KEY	**Größe** / HEX SIZE
QRK-5	1/16"
QRK-6	5/64"
QRK-8	3/32"
QRK-10	1/8"

QCRSS 23-43 **bestehend aus/**EXIST OF: **Ausbau-Steckschlüssel** REMOVAL SOCKET	**Klemmbereich des Steckschlüssel** GRIP RANGE OF SOCKET **Inch**	**mm**
QCHR 235-10	0.235-0.255	5,97-6,48
QCHR 245-10	0.245-0.265	6,22-6,73
QCHR 255-10	0.255-0.275	6,48-6,99
QCHR 265-10	0.265-0.285	6,73-7,24
QCHR 275-10	0.275-0.295	6,99-7,49
QCHR 285-10	0.285-0.305	7,24-7,75
QCHR 295-10	0.295-0.315	7,49-8,00
QCHR 305-10	0.305-0.325	7,75-8,26
QCHR 315-10	0.315-0.335	8,00-8,51
QCHR 325-10	0.325-0.345	8,26-8,76
QCHR 335-10	0.335-0.355	8,51-9,02
QCHR 355-10	0.355-0.375	9,02-9,53
QCHR 375-10	0.375-0.395	9,53-10,03
QCHR 395-10	0.395-0.415	10,03-10,54

Standard Steckschlüssellänge ist 25,4 mm - STANDARD SOCKET LENGTH IS 1"

Hi-Lok Ein- und Ausbau-Werkzeugsatz
HI-LOK INSTALLATION & REMOVAL TOOL KIT

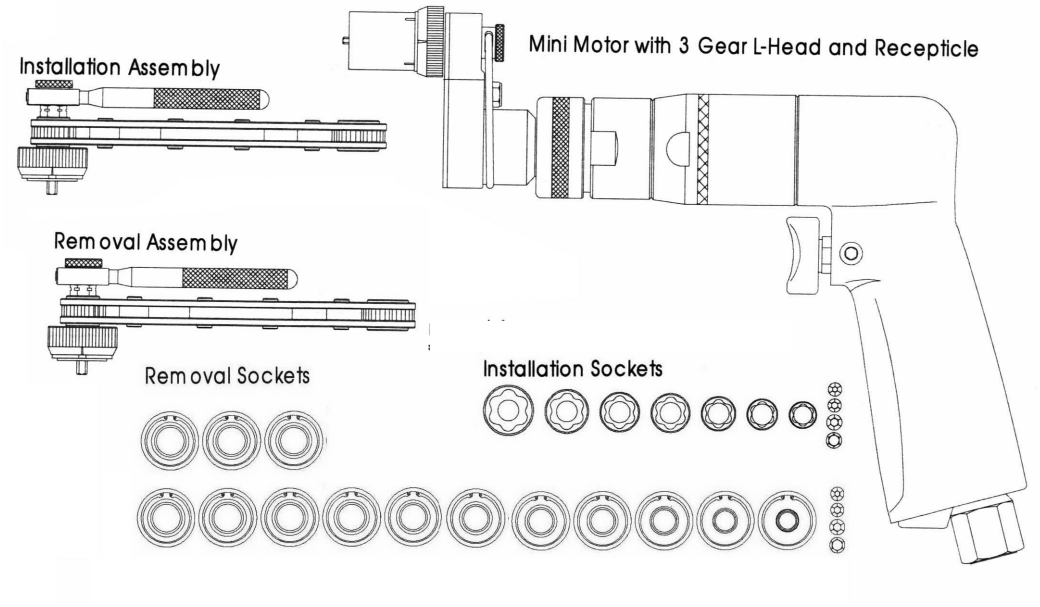

QCK-4000

Inhalt / CONTENTS:	**Artikel-Nr.** PART NO.
Aufbewahrungskasten / CASE	**---**
Pneum. Mini Schrauber mit kleinem Winkelkopf und Adapter für Steckschlüssel PNEUM. MINI MOTOR WITH 3 GEAR L-HEAD AND RECEPTICLE FOR SOCKETS	**MQCLA43S-10**
Hand-Einbauwerkzeug mit Adapter für Steckschlüssel HAND-INSTALLATION TOOL WITH RECEPTICLE FOR SOCKETS	**QCHA932**
Hand-Ausbauwerkzeug mit Adapter für Steckschlüssel HAND-REMOVAL TOOL WITH RECEPTICLE FOR SOCKETS	**QCHRA932**
Einbau-Steckschlüsselsatz (7 tlg.) inkl. 4 QRK-Stiftschlüssel Installation Socket Set (7 pcs.) incl. 4 QRK Hex-Keys	**QCSS22-43-10**
Ausbau-Steckschlüsselsatz (14 tlg.) inkl. 4 QRK-Stiftschlüssel Removal Socket Set (14 pcs.) incl. 4 QRK Hex-Keys	**QCRSS23-43**

QCSS 22-43-10 **bestehend aus/**EXIST OF: **Einbau-Steckschlüssel** INSTALLATION SOCKET	**Größe** HEX SIZE
QCHS 218-10	**7/32"** (.218) 5,56 mm
QCHS 250-10	**1/4"** (.250) 6,35 mm
QCHS 281-10	**9/32"** (.281) 7,14 mm
QCHS 312-10	**5/16"** (.312) 7,94 mm
QCHS 343-10	**11/32"** (.343) 8,73 mm
QCHS 375-10	**3/8"** (.375) 9,53 mm
QCHS 437-10	**7/16"** (.437) 11,11 mm

Stiftschlüssel / HEX KEY	**Größe** / HEX SIZE
QRK-5	1/16"
QRK-6	5/64"
QRK-8	3/32"
QRK-10	1/8"

QCRSS 23-43 **bestehend aus/**EXIST OF: **Ausbau-Steckschlüssel** REMOVAL SOCKET	**Klemmbereich des Steckschlüssel** GRIP RANGE OF SOCKET **Inch**	**mm**
QCHR 235-10	0.235-0.255	5,97-6,48
QCHR 245-10	0.245-0.265	6,22-6,73
QCHR 255-10	0.255-0.275	6,48-6,99
QCHR 265-10	0.265-0.285	6,73-7,24
QCHR 275-10	0.275-0.295	6,99-7,49
QCHR 285-10	0.285-0.305	7,24-7,75
QCHR 295-10	0.295-0.315	7,49-8,00
QCHR 305-10	0.305-0.325	7,75-8,26
QCHR 315-10	0.315-0.335	8,00-8,51
QCHR 325-10	0.325-0.345	8,26-8,76
QCHR 335-10	0.335-0.355	8,51-9,02
QCHR 355-10	0.355-0.375	9,02-9,53
QCHR 375-10	0.375-0.395	9,53-10,03
QCHR 395-10	0.395-0.415	10,03-10,54

Standard Steckschlüssellänge ist 25,4 mm - STANDARD SOCKET LENGTH IS 1"

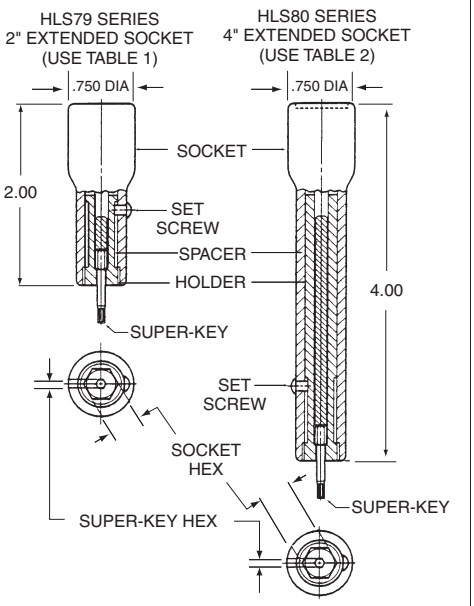

INSTALLATION TOOLING

SUPER HLA1051

Straight Driver Assembly with Extended Socket and Super-Key™ (T-Series)

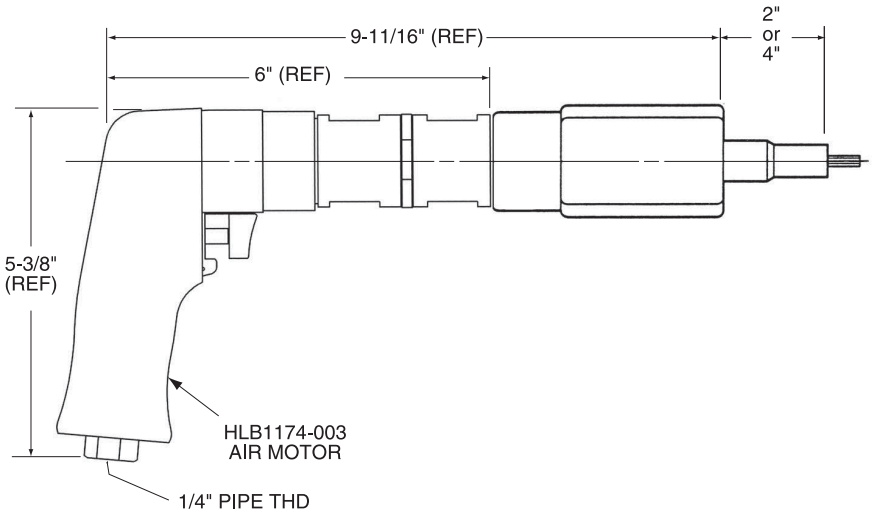

DRIVER BASIC PART NO. — SOCKET HEX REF. TABLE 1 OR 2 — SOCKET LENGTH: X = 4.0", NO LETTER = 2.0" — SUPER-KEY HEX REF. TABLE 1 OR 2. — SUPER-KEY (T-SERIES)

HLA1051 - 312 (X) - 078 -T

Example: complete driver assy. part no.

ORDERING INFORMATION

1. Match pin and collar hexes with Super-Key Hex and Socket Hex.
2. See tables 1 & 2 for corresponding complete driver assy part no.

TECHNICAL DATA

Operating Pressure ..... 90 PSIA	Horsepower Rating 0.70
MAX. TORQUE RATING ..... 300 in. lb (Motor) @90 PSIA	Air Consumption ..... 22 SCFM
Socket Speed ..... 250 RPM	Weight ..... 3.8 lb

TABLE 1

COLLAR DRIVING HEX (Matches Socket Hex)	PIN RECESS HEX (Matches Super-Key Hex)	COMPLETE DRIVER ASSY. PART NO. w/ HLS79 Series 2" Extended Socket
3/16	1/16	HLA1051-187-062T
7/32		HLA1051-218-062T
1/4		HLA1051-250-062T
9/32		HLA1051-281-062T
5/16		HLA1051-312-062T
11/32		HLA1051-343-062T
7/32		HLA1051-218-078T
1/4	5/64	HLA1051-250-078T
9/32		HLA1051-281-078T
5/16		HLA1051-312-078T
11/32		HLA1051-343-078T
3/8		HLA1051-375-078T
5/16	3/32	HLA1051-312-094T
11/32		HLA1051-343-094T
3/8		HLA1051-375-094T
7/16		HLA1051-437-094T

TABLE 2

COLLAR DRIVING HEX (Matches Socket Hex)	PIN RECESS HEX (Matches Super-Key Hex)	COMPLETE DRIVER ASSY. PART NO. w/ HLS80 Series 4" Extended Socket
3/16	1/16	HLA1051-187X-062T
7/32		HLA1051-218X-062T
1/4		HLA1051-250X-062T
9/32		HLA1051-281X-062T
5/16		HLA1051-312X-062T
11/32		HLA1051-343X-062T
7/32		HLA1051-218X-078T
1/4	5/64	HLA1051-250X-078T
9/32		HLA1051-281X-078T
5/16		HLA1051-312X-078T
11/32		HLA1051-343X-078T
3/8		HLA1051-375X-078T
5/16	3/32	HLA1051-312X-094T
11/32		HLA1051-343X-094T
3/8		HLA1051-375X-094T
7/16		HLA1051-437X-094T

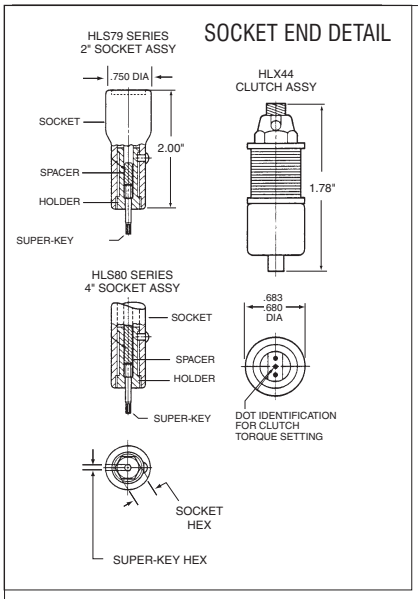

INSTALLATION TOOLING

SUPER HLA1066

Offset Driver Assembly
with Clutch, Extended Socket
and Super-Key™ (T-Series)

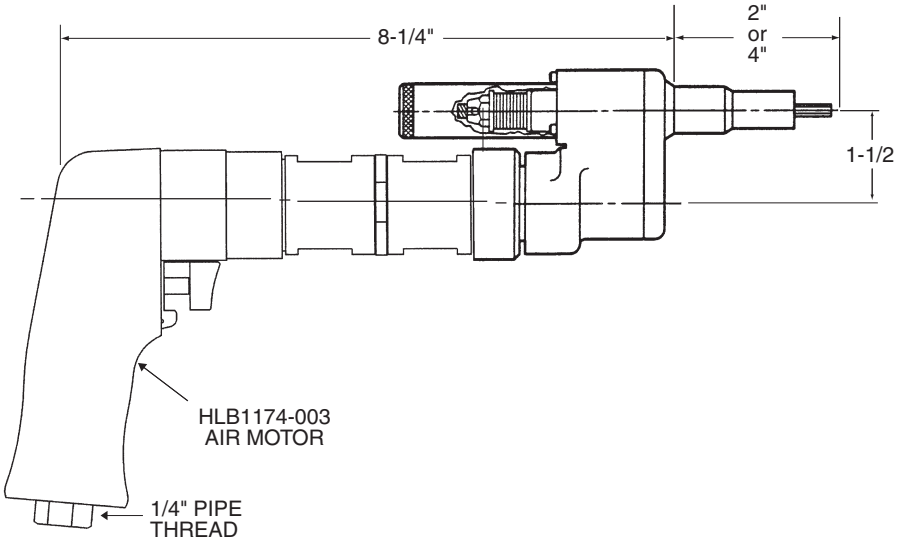

DRIVER BASIC PART NO. — SOCKET HEX REF. TABLE 1 — SOCKET LENGTH: X = 4.0", NO LETTER = 2.0" — SUPER-KEY HEX REF. TABLE 1. — SUPER-KEY (T-SERIES)

HLA1066-312(X)-078 T

Example: complete driver assy. part no.

ORDERING INFORMATION

1. Match pin and collar hexes with Super-Key Hex and Socket Hex.
2. See table 1 for corresponding complete driver assy part no.

TECHNICAL DATA

Operating Pressure ..... 90 PSIA	Horsepower Rating 0.70
MAX. TORQUE RATING ..... 300 in. lb (Motor) @90 PSIA	Air Consumption ..... 22 SCFM
Socket Speed ..... 250 RPM	Weight ..... 3.8 lb

TABLE 1

COLLAR DRIVING HEX (Matches Socket Hex)	PIN RECESS HEX (Matches Super-Key Hex)	COMPLETE DRIVER ASSY. PART NO. WITH HLS79 SERIES 2" EXTENDED SOCKET	COMPLETE DRIVER ASSY. PART NO. WITH HLS80 SERIES 4" EXTENDED SOCKET	B DIA.	HLAX4 CLUTCH ASSEMBLIES PART NO.	HLAX4 CLUTCH ASSEMBLIES DOT IDENTIFICATION	HLAX4 CLUTCH ASSEMBLIES TORQUE SETTING
1/4	1/16	HLA1066-250-062T	HLA1066-250X-062T	0.468	HLXA4-5	•	8-10 IN. LB
9/32		HLA1066-281-062T	HLA1066-281X-062T	0.468			
5/16		HLA1066-312-062T	HLA1066-312X-062T	0.500			
11/32		HLA1066-343-062T	HLA1066-343X-062T	0.500			
1/4	5/64	HLA1066-250-078T	HLA1066-250X-078T	0.468	HLXA4-6	• •	18-20 IN. LB
9/32		HLA1066-281-078T	HLA1066-281X-078T	0.468			
5/16		HLA1066-312-078T	HLA1066-312X-078T	0.500			
11/32		HLA1066-343-078T	HLA1066-343X-078T	0.500			
3/8		HLA1066-375-078T	HLA1066-375X-078T	0.550			
5/16	3/32	HLA1066-312-094T	HLA1066-312X-094T	0.500	HLXA4-8	• • •	30-32 IN. LB
11/32		HLA1066-343-094T	HLA1066-343X-094T	0.500			
3/8		HLA1066-375-094T	HLA1066-375X-094T	0.550			
7/16		HLA1066-437-094T	HLA1066-437X-094T	0.625			

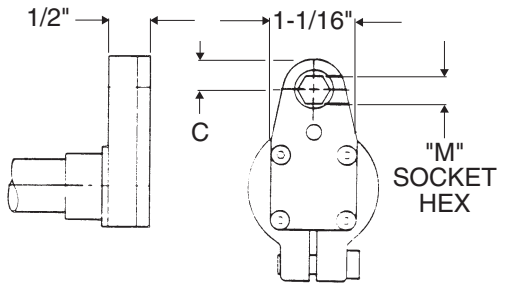

HLG115H OFFSET ADAPTOR ASSY W/THRU-HEX SOCKET
(Finder pin & leaf spring not included)

INSTALLATION TOOLING

SUPER HLA1071

Offset Driver Assembly
with Interference Fit Flush Socket

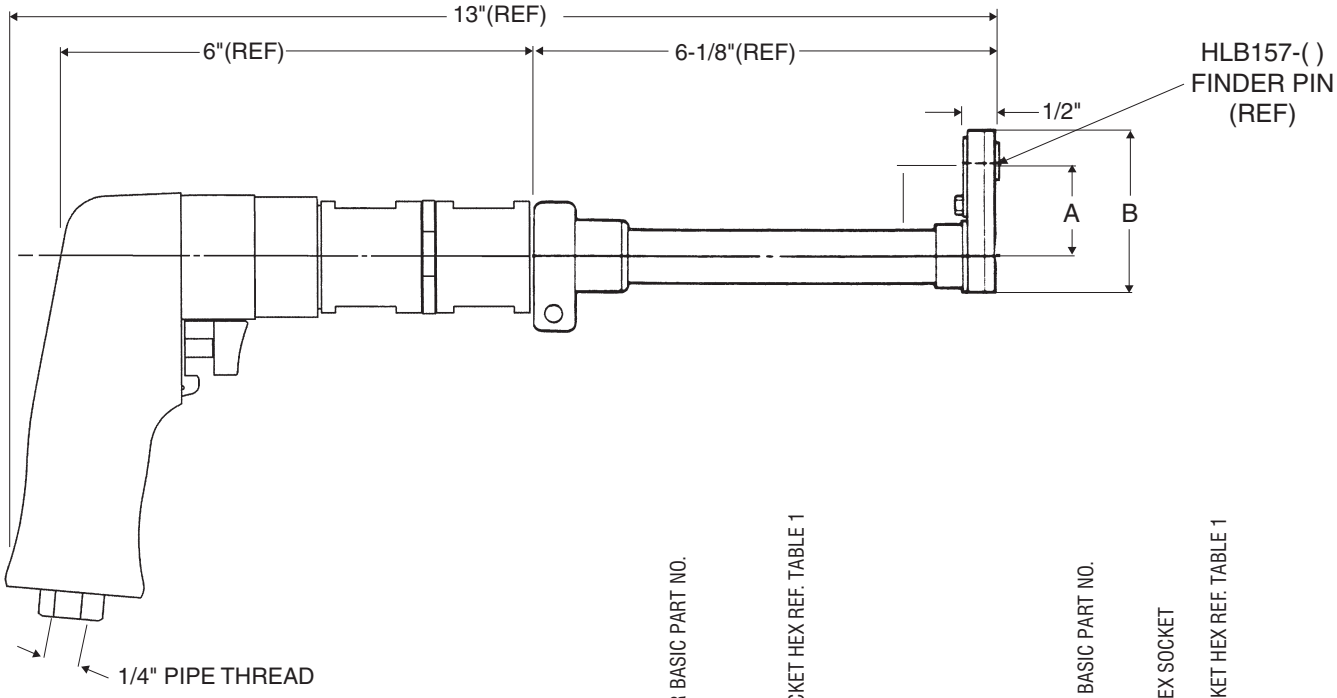

ORDERING INFORMATION

1. Determine collar driving hex dimensions of the fasteners to be installed.
2. See table 1 for 'M'socket hex to match collar driving hex dimensions. Determine complete tool assembly part no. (Example 1).
3. See table 2 for complete tool assembly part nos. to obtain an Offset Adaptor Assembly featuring a thru-hex socket, less finder pin and leaf spring.
4. See example 2.

Example 1: complete driver assy.

Example 2: complete driver assy. part no. w/ thru-hex socket

TECHNICAL DATA

Operating Pressure	90 PSIA	Horsepower Rating	0.70
MAX. TORQUE RATING (Motor)	300 in. lb @90 PSIA	Air Consumption	22 SCFM
Socket Speed	250 RPM	Weight	3.8 lb

				TABLE 1				TABLE 2		
COLLAR Hex Size	A C to C	B OVERALL	C EDGE DISTANCE	"M" SOCKET HEX (Matches Collar Driving Hex)	COMPLETE TOOL ASSY. PART NO.	OFFSET ADAPTOR ASSY. PART NO. (REF.)	OFFSET ADAPTOR ASSY. PART NO. (REF.)	"M" SOCKET HEX (Matches Collar Driving Hex)	COMPLETE TOOL ASSY. PART NO.	OFFSET ADAPTOR ASSY. PART NO. (REF.)
up to 3/8	1.375	2.330	0.431	5/16	HLA1071-312	HLG115-312	HLB157-312	5/16	HLA1071H-312	HLG115H-312
7/16 and up	1.420	2.450	0.500	11/32	HLA1071-343	HLG115-343	HLB157-343	11/32	HLA1071H-343	HLG115H-343
				3/8	HLA1071-375	HLG115-375	HLB157-375	3/8	HLA1071H-375	HLG115H-375
				7/16	HLA1071-437	HLG115-437	HLB157-437	7/16	HLA1071H-437	HLG115H-437

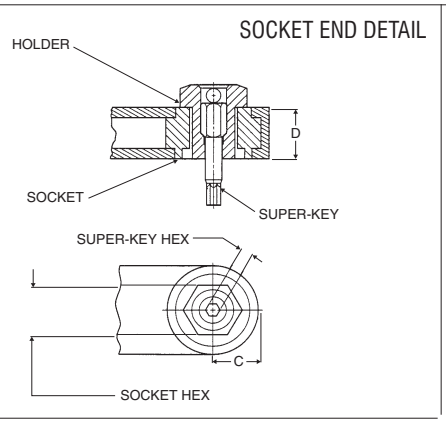

INSTALLATION TOOLING

SUPER HLA1072

Offset Driver Assembly with Thin Flush Socket and Super-Key™ (T-Series)

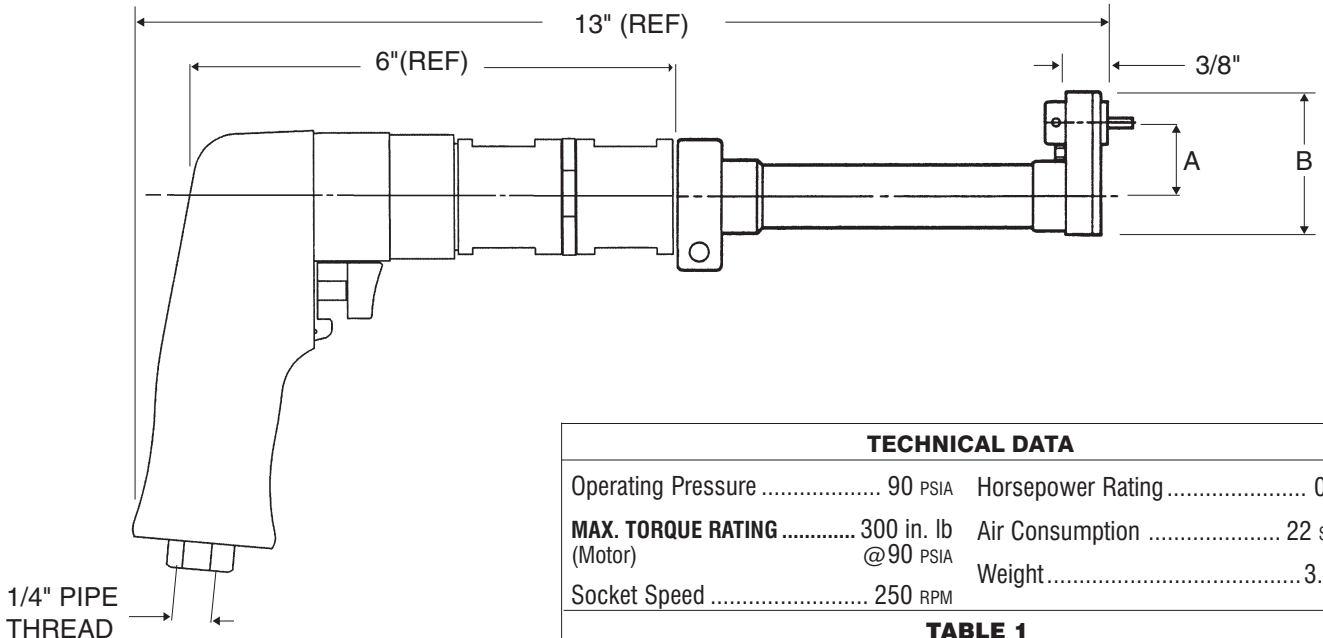

TECHNICAL DATA			
Operating Pressure	90 PSIA	Horsepower Rating	0.70
MAX. TORQUE RATING (Motor)	300 in. lb @90 PSIA	Air Consumption	22 SCFM
Socket Speed	250 RPM	Weight	3.8 lb

DRIVER BASIC PART NO. — SOCKET HEX (REF TABLE) — SUPER-KEY HEX (REF TABLE) — SUPER-KEY (T-SERIES)

HLA1072-312-078-T

Example: complete driver assy. part no.

ORDERING INFORMATION

1. Match pin and collar hexes with Super-Key Hex and Socket Hex.
2. See table for corresponding complete driver assy part no.

COLLAR Hex Size	A C to C	B OVERALL	C EDGE DISTANCE	D WIDTH
up to 3/8	1.375	2.338	0.437	0.375
7/16 and up	1.420	2.418	0.470	0.375

TABLE 1

COLLAR DRIVING HEX (Matches Socket Hex)	PIN RECESS HEX (Matches Super-Key Hex)	COMPLETE DRIVER ASSY	OFFSET ADAPTOR & SOCKET ASSY
3/16	1/16	HLA1072-187-062T	HLG137-187-062T
7/32		HLA1072-218-062T	HLG137-218-062T
1/4		HLA1072-250-062T	HLG137-250-062T
9/32		HLA1072-281-062T	HLG137-281-062T
5/16		HLA1072-312-062T	HLG137-312-062T
11/32		HLA1072-343-062T	HLG137-343-062T
7/32	5/64	HLA1072-218-078T	HLG137-218-078T
1/4		HLA1072-250-078T	HLG137-250-078T
9/32		HLA1072-281-078T	HLG137-281-078T
5/16		HLA1072-312-078T	HLG137-312-078T
11/32		HLA1072-343-078T	HLG137-343-078T
3/8		HLA1072-375-078T	HLG137-375-078T
6/16	3/32	HLA1072-312-094T	HLG137-312-094T
11/32		HLA1072-343-094T	HLG137-343-094T
3/8		HLA1072-375-094T	HLG137-375-094T
7/16		HLA1072-437-094T	HLG137-437-094T
3/8	1/8	HLA1072-375-125T	HLG137-375-125T
7/16		HLA1072-437-125T	HLG137-437-125T

INSTALLATION TOOLING

SUPER HLA1076

2 Inch Offset Driver Assembly with Multi-Length Socket and Super-Key™ (T-Series)

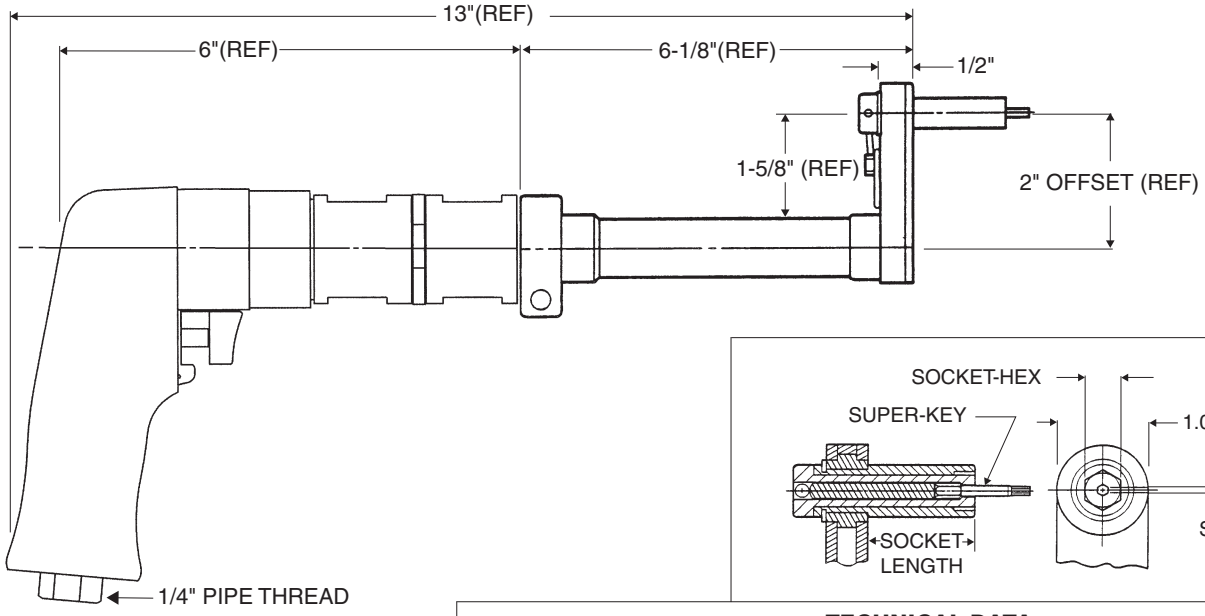

TECHNICAL DATA

Operating Pressure ..... 90 PSIA	Horsepower Rating 0.70
MAX. TORQUE RATING ..... 300 in. lb (Motor) @90 PSIA	Air Consumption ..... 22 SCFM
Socket Speed ..... 250 RPM	Weight ..... 3.8 lb

DRIVER BASIC PART NO. — SOCKET HEX REF. TABLE 1 — SOCKET LENGTH CODE (REF TABLE 2) — SUPER-KEY HEX REF. TABLE 1. — SUPER-KEY (T-SERIES)

HLA1076-312(E)-078T

Example: complete driver assy. part no.

ORDERING INFORMATION

1. Match pin and collar hexes with Super-Key Hex and Socket Hex.
2. See table 1 for corresponding complete driver assy part no.
2. See table 2 for SOCKET LENGTH CODES

TABLE 2

A = 0.50	E = 0.75
B = 1.00	F = 1.75
C = 1.50	X = 4.00
D = 2.00	

TABLE 1

COLLAR DRIVING HEX (Matches Socket Hex)	PIN RECESS HEX (Matches Super-Key Hex)	COMPLETE DRIVER ASSY. PART NO.	OFFSET ADAPTOR & SOCKET ASSY. PART NO.	EXTENDED SOCKET ASSY. PART NO.
3/16	1/16	HLA1076-187( )-062T	HLG321-187( )-062T	HLS76-187( )-062T
7/32		HLA1076-218( )-062T	HLG321-218( )-062T	HLS76-218( )-062T
1/4		HLA1076-250( )-062T	HLG321-250( )-062T	HLS76-250( )-062T
9/32		HLA1076-281( )-062T	HLG321-281( )-062T	HLS76-281( )-062T
5/16		HLA1076-312( )-062T	HLG321-312( )-062T	HLS76-312( )-062T
11/32		HLA1076-343( )-062T	HLG321-343( )-062T	HLS76-343( )-062T
7/32	5/64	HLA1076-218( )-078T	HLG321-218( )-078T	HLS76-218( )-078T
1/4		HLA1076-250( )-078T	HLG321-250( )-078T	HLS76-250( )-078T
9/32		HLA1076-281( )-078T	HLG321-281( )-078T	HLS76-281( )-078T
5/16		HLA1076-312( )-078T	HLG321-312( )-078T	HLS76-312( )-078T
11/32		HLA1076-343( )-078T	HLG321-343( )-078T	HLS76-343( )-078T
3/8		HLA1076-375( )-078T	HLG321-375( )-078T	HLS76-375( )-078T
5/16	3/32	HLA1076-312( )-094T	HLG321-312( )-094T	HLS76-312( )-094T
11/32		HLA1076-343( )-094T	HLG321-343( )-094T	HLS76-343( )-094T
3/8		HLA1076-375( )-094T	HLG321-375( )-094T	HLS76-375( )-094T
7/16		HLA1076-437( )-094T	HLG321-437( )-094T	HLS76-437( )-094T
3/8	1/8	HLA1076-375( )-125T	HLG321-375( )-125T	HLS76-375( )-125T
7/16		HLA1076-437( )-125T	HLG321-437( )-125T	HLS76-437( )-125T

INSTALLATION TOOLING

SUPER HLA1079

2 Inch Offset Driver Assembly with Thin Flush Socket and Super-Key™ (T-Series)

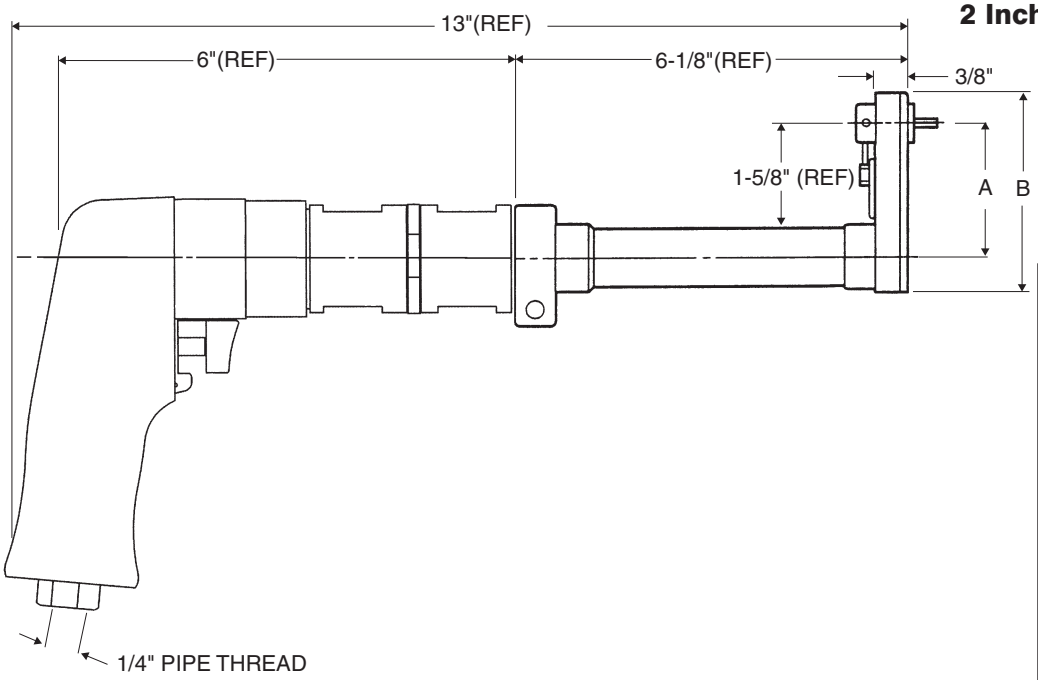

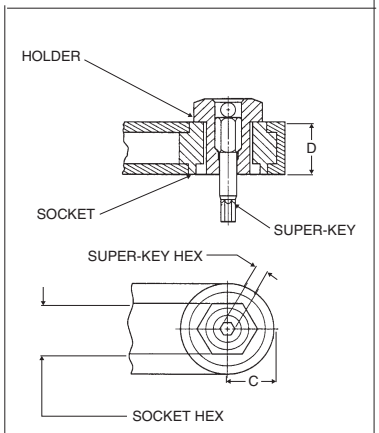

TECHNICAL DATA

Operating Pressure ..... 90 PSIA
MAX. TORQUE RATING ..... 300 in. lb (Motor) @90 PSIA
Socket Speed ..... 250 RPM
Horsepower Rating 0.70
Air Consumption ..... 22 SCFM
Weight ..... 3.8 lb

DRIVER BASIC PART NO. — SOCKET HEX REF. TABLE 1 — SUPER-KEY HEX REF. TABLE 1 — SUPER-KEY (T-SERIES)

HLA1079-312-078-T

Example: complete driver assy. part no.

ORDERING INFORMATION

1. Match pin and collar hexes with Super-Key Hex and Socket Hex.
2. See table 1 for corresponding complete driver assy part no.

COLLAR Hex Size	A C to C	B OVERALL	C EDGE DISTANCE	D WIDTH
up to 3/8	2.210	3.175	0.431	0.375
7/16 and up	2.250	3.254	0.470	0.375

TABLE 1

COLLAR DRIVING HEX (Matches Socket Hex)	PIN RECESS HEX (Matches Super-Key Hex)	COMPLETE DRIVER ASSY.	OFFSET ADAPTOR & SOCKET ASSY.
3/16	1/16	HLA1079-187-062T	HLG148-187-062T
7/32		HLA1079-218-062T	HLG148-218-062T
1/4		HLA1079-250-062T	HLG148-250-062T
9/32		HLA1079-281-062T	HLG148-281-062T
5/16		HLA1079-312-062T	HLG148-312-062T
11/32		HLA1079-343-062T	HLG148-343-062T
7/32	5/64	HLA1079-218-078T	HLG148-218-078T
1/4		HLA1079-250-078T	HLG148-250-078T
9/32		HLA1079-281-078T	HLG148-281-078T
5/16		HLA1079-312-078T	HLG148-312-078T
11/32		HLA1079-343-078T	HLG148-343-078T
3/8		HLA1079-375-078T	HLG148-375-078T
5/16	3/32	HLA1079-312-094T	HLG148-312-094T
11/32		HLA1079-343-094T	HLG148-343-094T
3/8		HLA1079-375-094T	HLG148-375-094T
7/16		HLA1079-437-094T	HLG148-437-094T
3/8	1/8	HLA1079-375-125T	HLG148-375-125T
7/16		HLA1079-437-125T	HLG148-437-125T

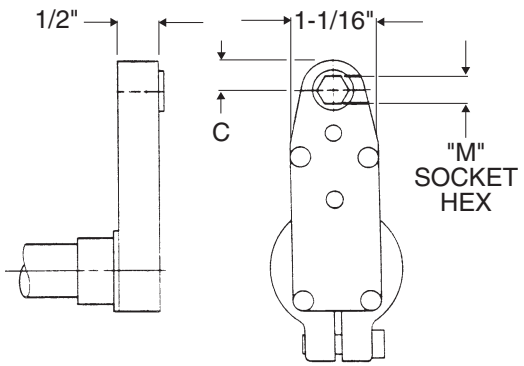

HLG125H OFFSET ADAPTER ASSY WITH
THRU-HEX SOCKET, LESS FINDER PIN AND LEAF SPRING

INSTALLATION TOOLING

SUPER HLA1084

2 Inch Offset Driver Assembly
with Interference Fit Flush Socket

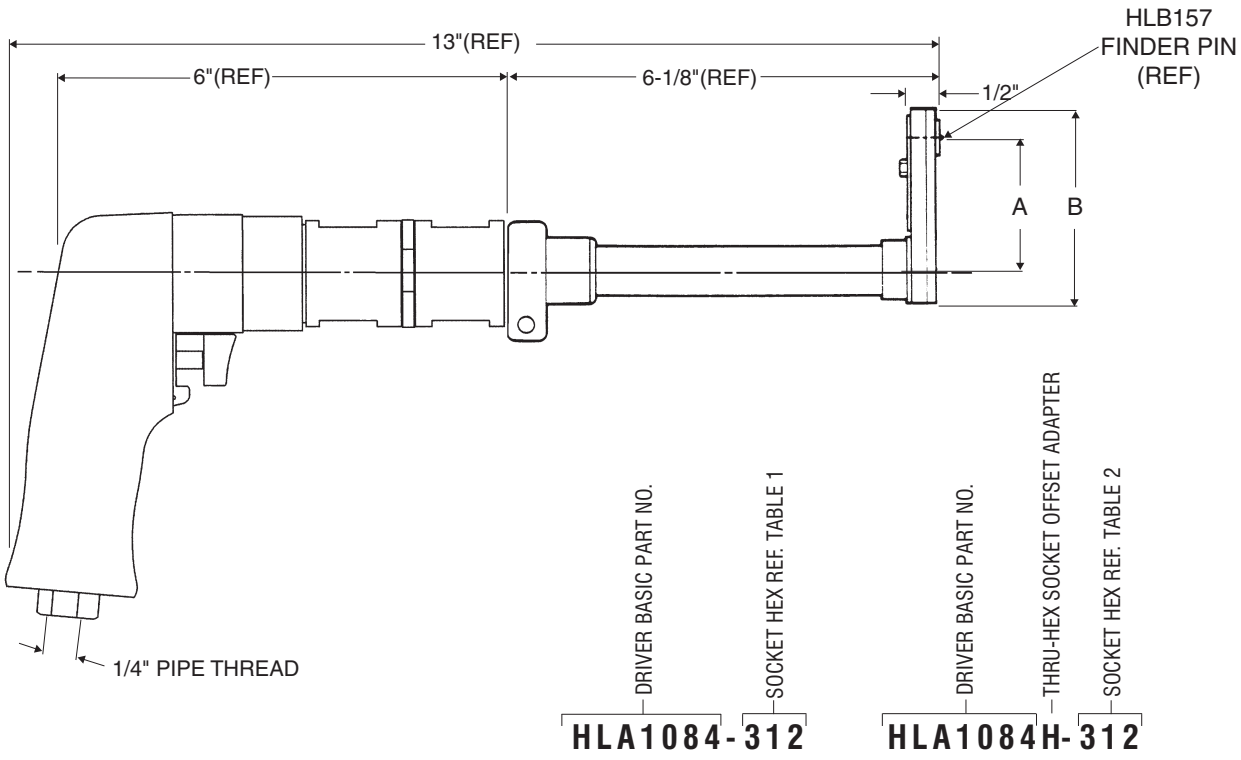

ORDERING INFORMATION

1. Match pin and collar hexes with Super-Key Hex and Socket Hex.
2. See tables 1 & 2 for corresponding complete driver assy part no.

TECHNICAL DATA

Operating Pressure ..... 90 PSIA
MAX. TORQUE RATING ..... 300 in. lb (Motor) @90 PSIA
Socket Speed ..... 250 RPM
Horsepower Rating 0.70
Air Consumption ..... 22 SCFM
Weight ..... 3.8 lb

					TABLE 1				TABLE 2		
SOCKET SIZE	A C to C	B OVERALL	C EDGE DISTANCE	D WIDTH	"M" SOCKET HEX (Matches Collar Driving Hex)	COMPLETE TOOL ASSY. PART NO.	OFFSET ADAPTOR ASSY. PART NO. (REF)	FINDER PIN PART NO.	"M" SOCKET HEX (Matches Collar Driving Hex)	COMPLETE TOOL ASSY. PART NO.	OFFSET ADAPTOR ASSY. PART NO. (REF)
up to 3/8	2.210	3.182	0.431	0.500	1/4	HLA1084-250	HLG125-250	HLB157-250	1/4	HLA1084H-250	HLG125H-250
7/16 and up	2.250	3.283	0.500	0.500	5/16	HLA1084-312	HLG125-312	HLB157-312	5/16	HLA1084H-312	HLG125H-312
					11/32	HLA1084-343	HLG125-343	HLB157-343	11/32	HLA1084H-343	HLG125H-343
					7/16	HLA1084-437	HLG125-437	HLB157-437	7/16	HLA1084H-437	HLG125H-437

INSTALLATION TOOLING

SUPER HLA1086

2 Inch Offset Back Drive Driver Assembly with Extended Socket and Super-Key™ (T-Series)

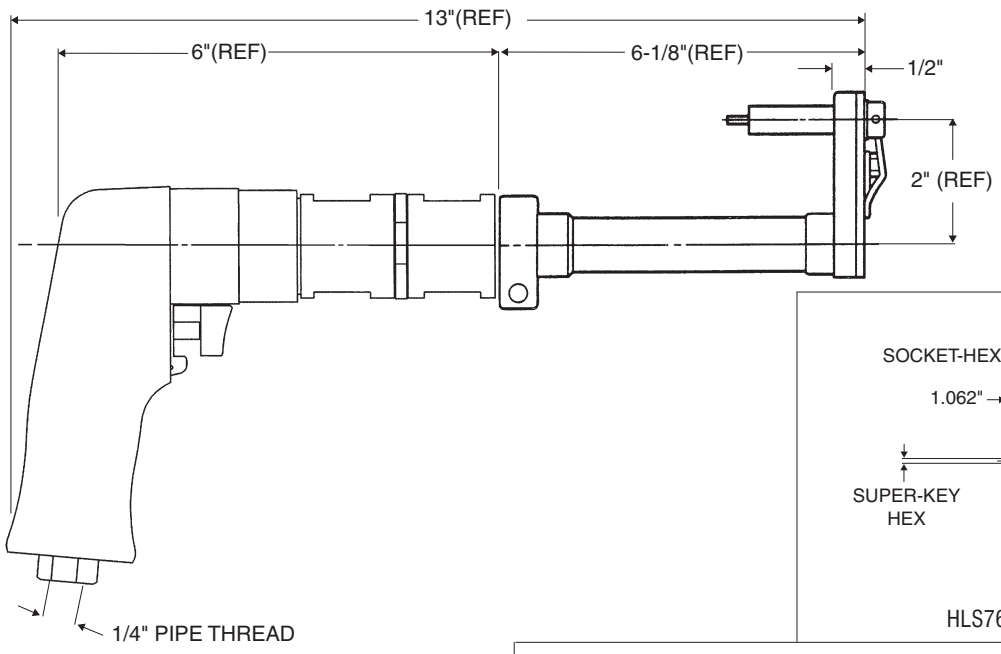

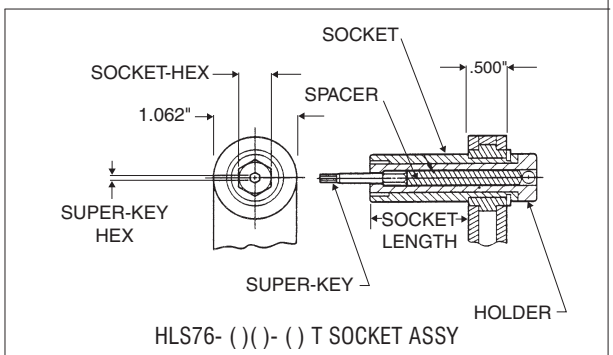

HLS76- ( )( )- ( ) T SOCKET ASSY

TECHNICAL DATA

Operating Pressure ..... 90 PSIA	Horsepower Rating 0.70
MAX. TORQUE RATING ..... 300 in. lb (Motor) @90 PSIA	Air Consumption ..... 22 SCFM
Socket Speed ..... 250 RPM	Weight ..... 3.8 lb

DRIVER BASIC PART NO. — SOCKET HEX REF. TABLE 1 — SOCKET LENGTH (REF TABLE 2) — SUPER-KEY HEX (REF TABLE 1) — SUPER-KEY (T-SERIES)

HLA1086-312(A)-078-T

Example: complete driver assy. part no.

ORDERING INFORMATION

1. Match pin and collar hexes with Super-Key Hex and Socket Hex.
2. See table 1 for corresponding complete driver assy part no.

TABLE 2

A = 0.50	E = 0.75
B = 1.00	F = 1.75
C = 1.50	X = 4.00
D = 2.00	

TABLE 1

COLLAR DRIVING HEX (Matches Socket Hex)	PIN RECESS HEX (Matches Super-Key Hex)	COMPLETE DRIVER ASSY. PART NO.	OFFSET ADAPTOR & SOCKET ASSY. PART NO.	EXTENDED SOCKET ASSY. PART NO.
3/16	1/16	HLA1086-187( )-062T	HLG222-187( )-062T	HLS76-187( )-062T
7/32		HLA1086-218( )-062T	HLG222-218( )-062T	HLS76-218( )-062T
1/4		HLA1086-250( )-062T	HLG222-250( )-062T	HLS76-250( )-062T
9/32		HLA1086-281( )-062T	HLG222-281( )-062T	HLS76-281( )-062T
5/16		HLA1086-312( )-062T	HLG222-312( )-062T	HLS76-312( )-062T
11/32		HLA1086-343( )-062T	HLG222-343( )-062T	HLS76-343( )-062T
7/32	5/64	HLA1086-218( )-078T	HLG222-218( )-078T	HLS76-218( )-078T
1/4		HLA1086-250( )-078T	HLG222-250( )-078T	HLS76-250( )-078T
9/32		HLA1086-281( )-078T	HLG222-281( )-078T	HLS76-281( )-078T
5/16		HLA1086-312( )-078T	HLG222-312( )-078T	HLS76-312( )-078T
11/32		HLA1086-343( )-078T	HLG222-343( )-078T	HLS76-343( )-078T
3/8		HLA1086-375( )-078T	HLG222-375( )-078T	HLS76-375( )-078T
5/16		HLA1086-312( )-094T	HLG222-312( )-094T	HLS76-312( )-094T
11/32		HLA1086-343( )-094T	HLG222-343( )-094T	HLS76-343( )-094T
3/8	3/32	HLA1086-375( )-094T	HLG222-375( )-094T	HLS76-375( )-094T
7/16		HLA1086-437( )-094T	HLG222-437( )-094T	HLS76-437( )-094T
3/8	1/8	HLA1086-375( )-125T	HLG222-375( )-125T	HLS76-375( )-125T
7/16		HLA1086-437( )-125T	HLG222-437( )-125T	HLS76-437( )-125T

INSTALLATION TOOLING

SUPER HLA1097

4 Inch Offset Driver Assembly with Flush Socket and Super-Key™ (T-Series)

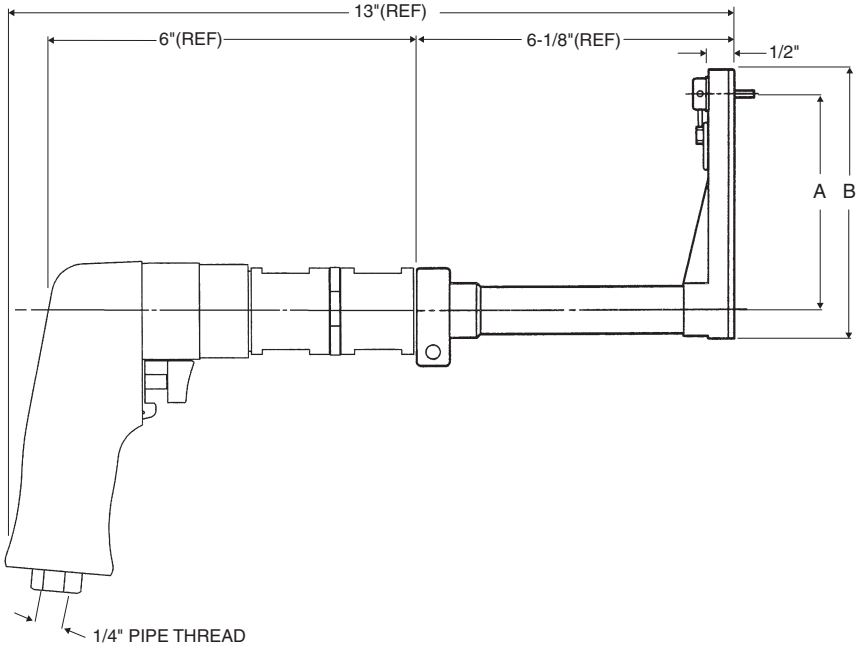

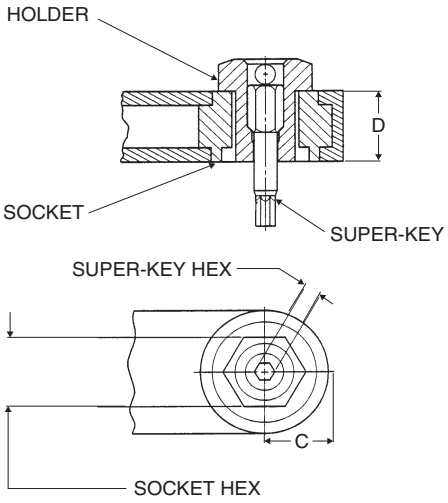

HLG168- ( )( )- ( ) T SOCKET ASSY

TECHNICAL DATA

Operating Pressure ..... 90 PSIA	Horsepower Rating 0.70
MAX. TORQUE RATING ..... 300 in. lb (Motor) @90 PSIA	Air Consumption ..... 22 SCFM
Socket Speed ..... 250 RPM	Weight ..... 3.8 lb

DRIVER BASIC PART NO. — SOCKET HEX REF. TABLE 1 — SUPER-KEY HEX REF. TABLE 1 — SUPER-KEY HEX REF. TABLE 1

HLA1097 - 312 -078 T

Example: complete driver assy. part no.

ORDERING INFORMATION

1. Match pin and collar hexes with Super Key Hex and Socket Hex.
2. See table 1 for Complete Driver Assy Part No.

COLLAR Hex Size	A C to C	B OVERALL	C EDGE DISTANCE	D WIDTH
up to 11/32	4.470	5.502	0.450	0.500
3/8 and up	4.512	5.594	0.500	0.500

TABLE 1

COLLAR DRIVING HEX (Matches Socket Hex)	PIN RECESS HEX (Matches Super-Key Hex)	COMPLETE DRIVER ASSY.	OFFSET ADAPTOR & SOCKET ASSY.
3/16	1/16	HLA1097-187-062T	HLG168-187-062T
7/32		HLA1097-218-062T	HLG168-218-062T
1/4		HLA1097-250-062T	HLG168-250-062T
9/32		HLA1097-281-062T	HLG168-281-062T
5/16		HLA1097-312-062T	HLG168-312-062T
11/32		HLA1097-343-062T	HLG168-343-062T
7/32	5/64	HLA1097-218-078T	HLG168-218-078T
1/4		HLA1097-250-078T	HLG168-250-078T
9/32		HLA1097-281-078T	HLG168-281-078T
5/16		HLA1097-312-078T	HLG168-312-078T
11/32		HLA1097-343-078T	HLG168-343-078T
3/8		HLA1097-375-078T	HLG168-375-078T
5/16	3/32	HLA1097-312-094T	HLG168-312-094T
11/32		HLA1097-343-094T	HLG168-343-094T
3/8		HLA1097-375-094T	HLG168-375-094T
7/16		HLA1097-437-094T	HLG168-437-094T
3/8	1/8	HLA1097-375-125T	HLG168-375-125T
7/16		HLA1097-437-125T	HLG168-437-125T

INSTALLATION TOOLING

SUPER HLA1201

1 inch Offset Mini Driver Assembly with Thin Flush Socket and Super-Key™ (T-Series)

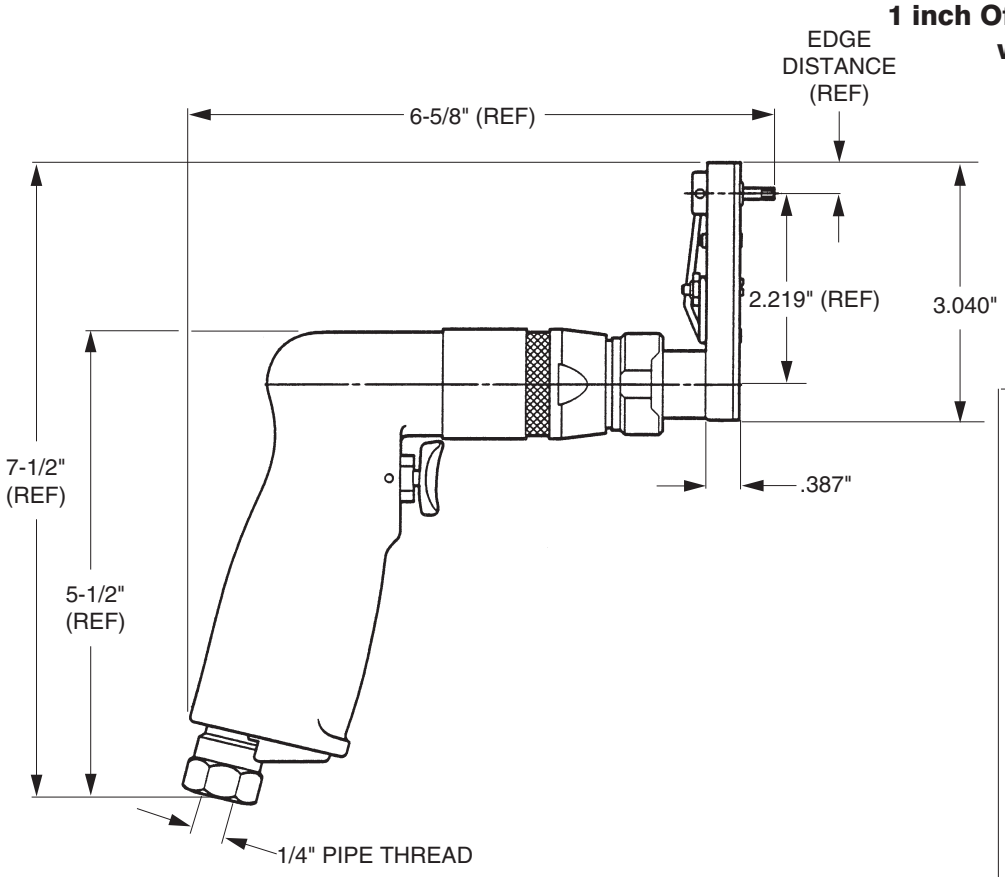

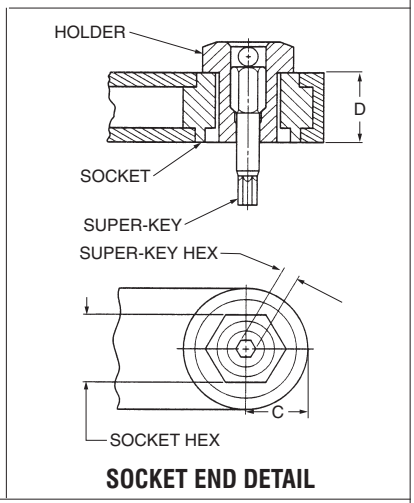

SOCKET END DETAIL

Socket Size	A C to C	B Overall	C Edge Dist.	D Width
ALL	1.094	2.000	0.360	0.387

TECHNICAL DATA

Operating Pressure ..... 90 PSIA
MAX. TORQUE RATING ..... 60 in. lb (Motor) @90 PSIA
Socket Speed ..... 500 RPM
Horsepower Rating 0.2
Air Consumption ..... 20 CFM
Weight ..... 2 lb

DRIVER BASIC PART NO. — SOCKET HEX REF. TABLE 1 — SUPER-KEY HEX REF. TABLE 1 — SUPER-KEY (T-SERIES)

HLA1201-312-078-T

Example: complete driver assy. part no.

ORDERING INFORMATION

1. Match pin and collar hexes with Super-Key Hex and Socket Hex.
2. See table 1 for corresponding complete driver assy part no.

TABLE 1

COLLAR DRIVING HEX (Matches Socket Hex)	PIN RECESS HEX (Matches Super-Key Hex)	COMPLETE DRIVER ASSY. PART NO.	OFFSET ADAPTOR AND SOCKET ASSY. PART NO.
3/16	1/16	HLA1201-187-062T	HLG326-187-062T
7/32		HLA1201-218-062T	HLG326-218-062T
1/4		HLA1201-250-062T	HLG326-250-062T
9/32		HLA1201-281-062T	HLG326-281-062T
5/16		HLA1201-312-062T	HLG326-312-062T
11/32		HLA1201-343-062T	HLG326-343-062T
7/32	5/64	HLA1201-218-078T	HLG326-218-078T
1/4		HLA1201-250-078T	HLG326-250-078T
9/32		HLA1201-281-078T	HLG326-281-078T
5/16		HLA1201-312-078T	HLG326-312-078T
11/32		HLA1201-343-078T	HLG326-343-078T

Installation Tool with Socket Speed 250 RPM available on request

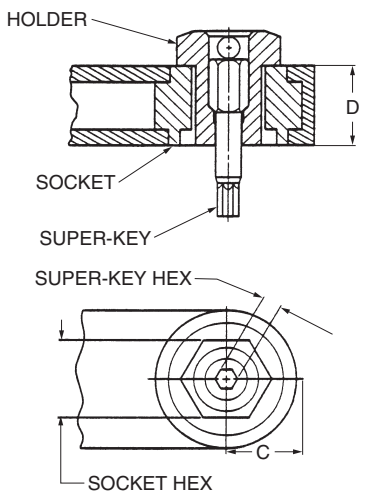

SOCKET END DETAIL

INSTALLATION TOOLING

SUPER HLA1202

2 Inch Offset Mini Driver Assembly with Thin Flush Socket and Super-Key™ (T-Series)

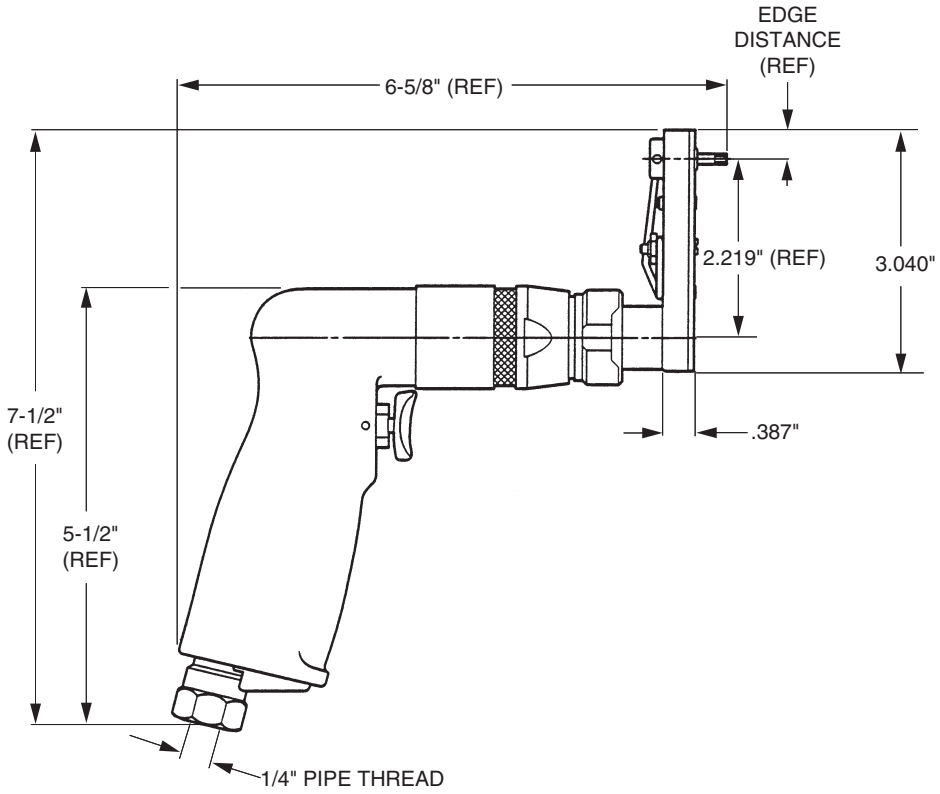

Socket Size	A C to C	B Overall	C Edge Dist.	D Width
ALL	2.219	3.040	0.360	0.387

TECHNICAL DATA

Operating Pressure ..... 90 PSIA
MAX. TORQUE RATING ..... 60 in. lb (Motor) @90 PSIA
Socket Speed ..... 500 RPM
Horsepower Rating 0.2
Air Consumption ..... 20 CFM
Weight ..... 2 lb

DRIVER BASIC PART NO. — SOCKET HEX REF. TABLE 1 — SUPER-KEY HEX REF. TABLE 1 — SUPER-KEY HEX (T-SERIES)

HLA1202-312-078-T

Example: complete driver assy. part no.

ORDERING INFORMATION

1. Match pin and collar hexes with Super-Key Hex and Socket Hex.
2. See table 1 for corresponding complete driver assy part no.

TABLE 1

COLLAR DRIVING HEX (Matches Socket Hex)	PIN RECESS HEX (Matches Super-Key Hex)	COMPLETE DRIVER ASSY. PART NO.	OFFSET ADAPTOR AND SOCKET ASSY. PART NO.
3/16	1/16	HLA1202-187-062T	HLG327-187-062T
7/32		HLA1202-218-062T	HLG327-218-062T
1/4		HLA1202-250-062T	HLG327-250-062T
9/32		HLA1202-281-062T	HLG327-281-062T
5/16		HLA1202-312-062T	HLG327-312-062T
11/32		HLA1202-343-062T	HLG327-343-062T
7/32	5/64	HLA1202-218-078T	HLG327-218-078T
1/4		HLA1202-250-078T	HLG327-250-078T
9/32		HLA1202-281-078T	HLG327-281-078T
5/16		HLA1202-312-078T	HLG327-312-078T
11/32		HLA1202-343-078T	HLG327-343-078T

Installation Tool with Socket Speed 250 RPM available on request

INSTALLATION TOOLING

SUPER HLA1203

1 Inch Offset Mini Driver Assembly with Multi-Length Socket and Super-Key™ (T-Series)

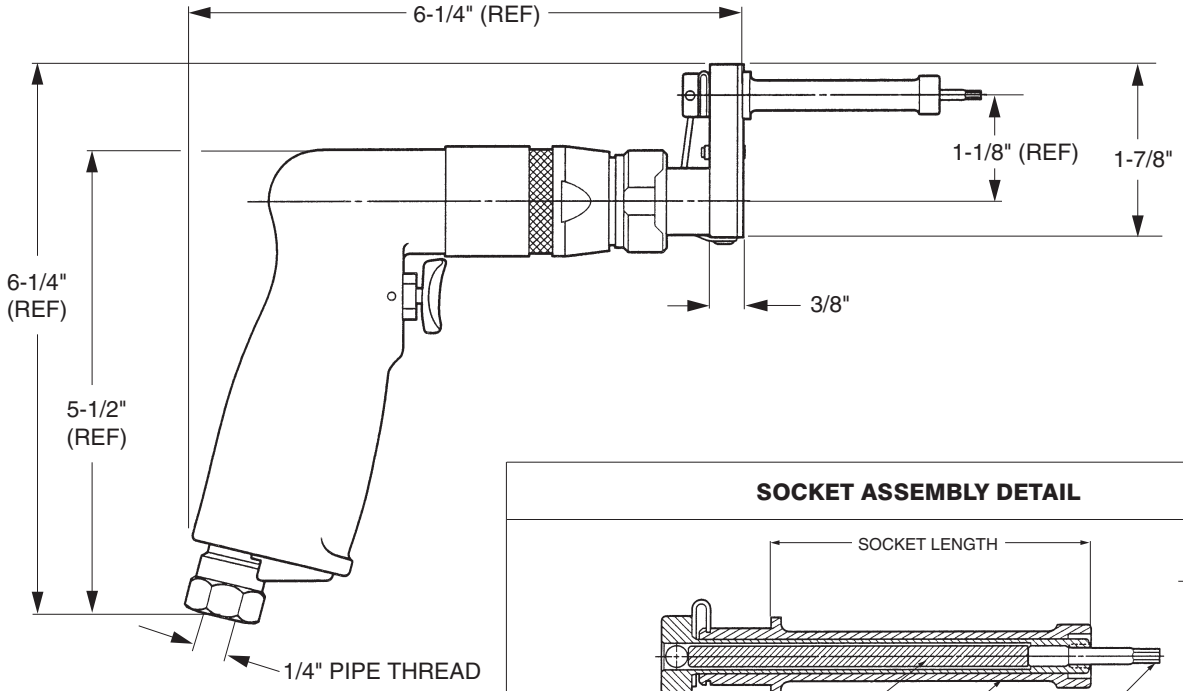

SOCKET ASSEMBLY DETAIL

TECHNICAL DATA

Operating Pressure ..... 90 PSIA	Horsepower Rating 0.2
MAX. TORQUE RATING ..... 60 in. lb (Motor) @90 PSIA	Air Consumption ..... 20 CFM
Socket Speed ..... 500 RPM	Weight ..... 2 lb

DRIVER BASIC PART NO. | SOCKET HEX REF. TABLE 1 | SOCKET LENGTH REF. TABLE 2 | SUPER-KEY HEX REF. TABLE 1 | SUPER-KEY HEX REF. TABLE 1

HLA1203-312 (B) - 078-T

Example: complete driver assy. part no.

ORDERING INFORMATION

1. Match pin and collar hexes with Super-Key Hex and Socket Hex.
2. See table 1 for corresponding complete driver assy part no.

TABLE 2

A = 0.50	E = 0.75
B = 1.00	F = 1.75
C = 1.50	X = 4.00
D = 2.00	

TABLE 1

COLLAR DRIVING HEX (Matches Socket Hex)	PIN RECESS HEX (Matches Super-Key Hex)	COMPLETE DRIVER ASSY. PART NO.	OFFSET ADAPTOR AND SOCKET ASSY. PART NO.
7/32	1/16	HLA1203-218-062T	HLS32-218( )-062T
7/32	5/64	HLA1203-218-078T	HLS32-218( )-078T
1/4	1/16	HLA1203-250-062T	HLS32-250( )-062T
1/4	5/64	HLA1203-250-078T	HLS32-250( )-078T
9/32	1/16	HLA1203-281-062T	HLS32-281( )-062T
9/32	5/64	HLA1203-281-078T	HLS32-281( )-078T
5/16	1/16	HLA1203-312-062T	HLS32-312( )-062T
5/16	5/64	HLA1203-312-078T	HLS32-312( )-078T
5/16	3/32	HLA1203-312-094T	HLS32-312( )-094T
11/32	1/16	HLA1203-343-062T	HLS32-343( )-062T
11/32	5/64	HLA1203-343-078T	HLS32-343( )-078T
11/32	3/32	HLA1203-343-094T	HLS32-343( )-094T

Installation Tool with Socket Speed 250 RPM available on request

INSTALLATION TOOLING

HLA1204

2 Inch Offset Mini Driver Assembly with Multi-Length Socket and Super-Key™ (T-Series)

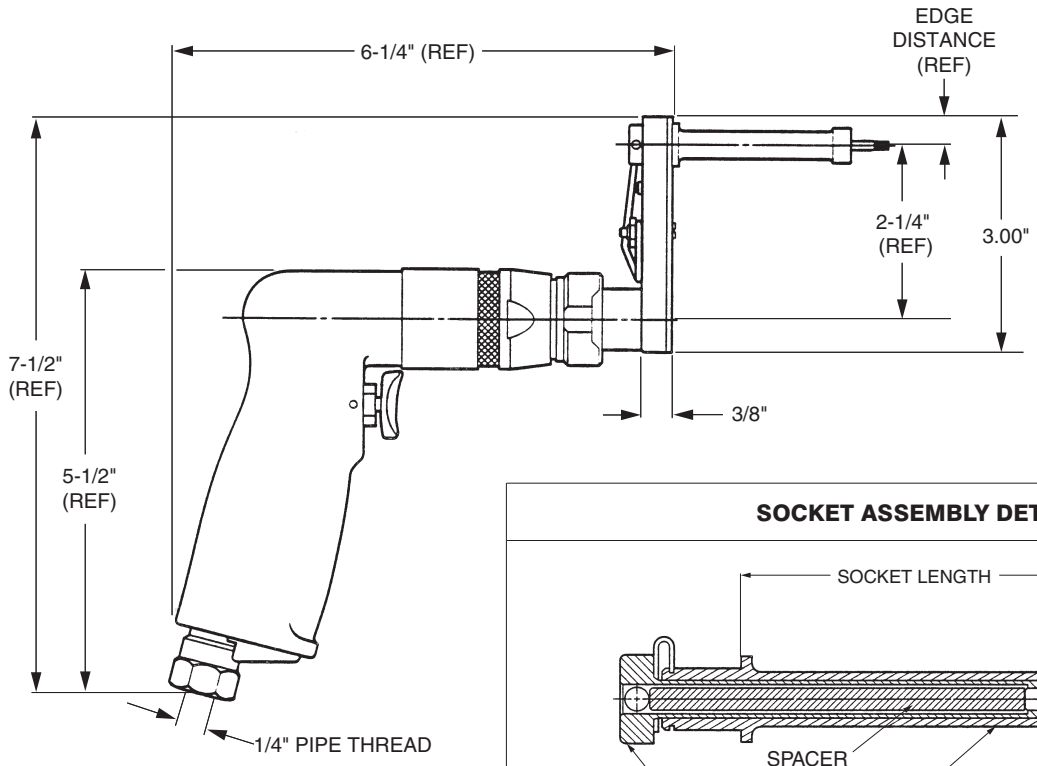

SOCKET ASSEMBLY DETAIL

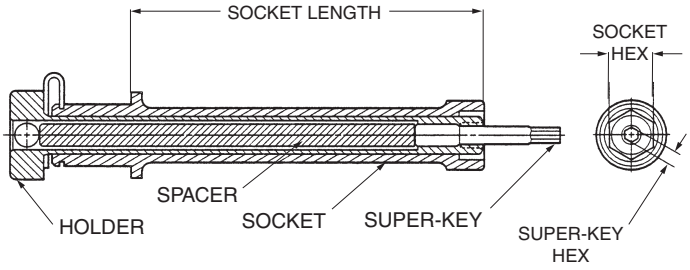

TECHNICAL DATA

Operating Pressure ..... 90 PSIA	Horsepower Rating 0.2
MAX. TORQUE RATING ..... 60 in. lb (Motor) @90 PSIA	Air Consumption ..... 20 CFM
Socket Speed ..... 500 RPM	Weight ..... 2 lb

DRIVER BASIC PART NO. | SOCKET HEX REF. TABLE 1 | SOCKET LENGTH REF. TABLE 2 | SUPER-KEY HEX REF. TABLE 1 | SUPER-KEY HEX (T-SERIES)

HLA1204-312 (B)-078 -T

Example: complete driver assy. part no.

ORDERING INFORMATION

1. Match pin and collar hexes with Super-Key Hex and Socket Hex.
2. See table 1 for corresponding complete driver assy part no.

TABLE 2

A = 0.50	E = 0.75
B = 1.00	F = 1.75
C = 1.50	X = 4.00
D = 2.00	

TABLE 1

COLLAR DRIVING HEX (Matches Socket Hex)	PIN RECESS HEX (Matches Super-Key Hex)	COMPLETE DRIVER ASSY. PART NO.	OFFSET ADAPTOR AND SOCKET ASSY. PART NO.
7/32	1/16	HLA1203-218-062T	HLS32-218( )-062T
7/32	5/64	HLA1203-218-078T	HLS32-218( )-078T
1/4	1/16	HLA1203-250-062T	HLS32-250( )-062T
1/4	5/64	HLA1203-250-078T	HLS32-250( )-078T
9/32	1/16	HLA1203-281-062T	HLS32-281( )-062T
9/32	5/64	HLA1203-281-078T	HLS32-281( )-078T
5/16	1/16	HLA1203-312-062T	HLS32-312( )-062T
5/16	5/64	HLA1203-312-078T	HLS32-312( )-078T
5/16	3/32	HLA1203-312-094T	HLS32-312( )-094T
11/32	1/16	HLA1203-343-062T	HLS32-343( )-062T
11/32	5/64	HLA1203-343-078T	HLS32-343( )-078T
11/32	3/32	HLA1203-343-094T	HLS32-343( )-094T

Installation Tool with Socket Speed 250 RPM available on request

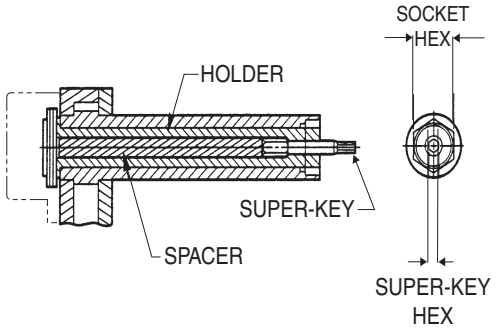

HLG208 - ( )( )- ( ) T SOCKET ASSY

INSTALLATION TOOLING

SUPER HLA2068

Heavy Duty 2 Inch Offset Driver Assembly with 2 Inch Extended Socket and Super-Key™ (T-Series)

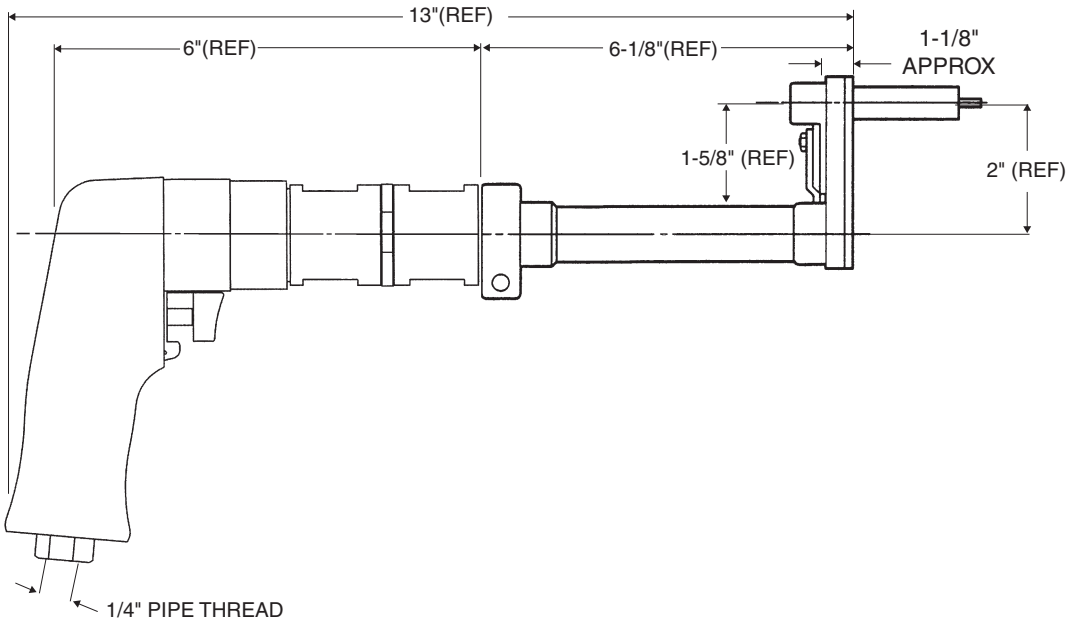

DRIVER BASIC PART NO. — SOCKET HEX REF. TABLE 1 — SUPER-KEY HEX REF. TABLE 1 — SUPER-KEY (T-SERIES)

HLA2068-312-078-T

Example: complete driver assy. part no.

ORDERING INFORMATION

1. Match pin and collar hexes with Super-Key Hex and Socket Hex.
2. See table 1 for corresponding complete driver assy part no.

TECHNICAL DATA

Operating Pressure ..... 90 PSIA	Horsepower Rating 0.70
MAX. TORQUE RATING ..... 300 in. lb (Motor) @90 PSIA	Air Consumption ..... 22 SCFM
Socket Speed ..... 250 RPM	Weight ..... 3.8 lb

TABLE 1

COLLAR DRIVING HEX (Matches Socket Hex)	PIN RECESS HEX (Matches Super-Key Hex)	COMPLETE DRIVER ASSY.	OFFSET ADAPTOR & SOCKET ASSY.
5/16	1/16	HLA2068-312-062T	HLG208-312-062T
11/32		HLA2068-343-062T	HLG208-343-062T
5/16	5/64	HLA2068-312-078T	HLG208-312-078T
11/32		HLA2068-343-078T	HLG208-343-078T
3/8		HLA2068-375-078T	HLG208-375-078T
5/16	3/32	HLA2068-312-094T	HLG208-312-094T
11/32		HLA2068-343-094T	HLG208-343-094T
3/8		HLA2068-375-094T	HLG208-375-094T
7/16		HLA2068-437-094T	HLG208-437-094T
3/8	1/8	HLA2068-375-125T	HLG208-375-125T
7/16		HLA2068-437-125T	HLG208-437-125T

INSTALLATION TOOLING

SUPER HLA3023

6 Inch Offset Back Drive Driver Assembly with Extended Socket and Super-Key™ (T-Series)

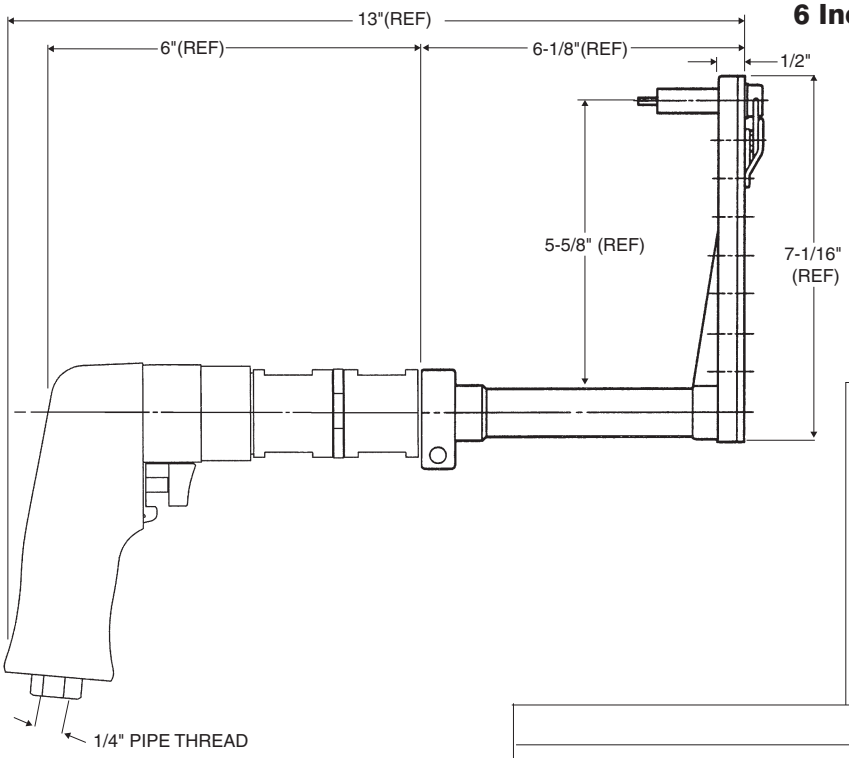

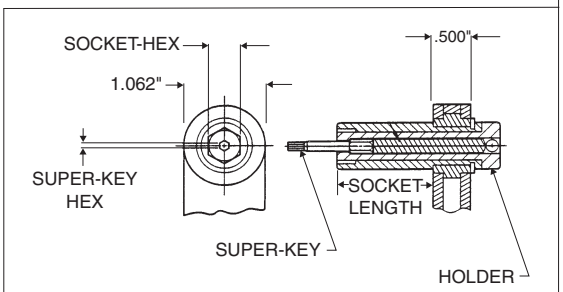

HLS76- ( )( )- ( )T SOCKET ASSY

TECHNICAL DATA

Operating Pressure	90 PSIA	Horsepower Rating	0.70
MAX. TORQUE RATING (Motor)	300 in. lb @90 PSIA	Air Consumption	22 SCFM
Socket Speed	250 RPM	Weight	3.8 lb

HLA3023-312(A)-078-T

DRIVER BASIC PART NO. | SOCKET HEX (REF TABLE 1) | SOCKET LENGTH CODE (REF TABLE 2) | SUPER-KEY HEX (REF TABLE 1) | SUPER-KEY (T-SERIES)

Example: complete driver assy part no.

ORDERING INFORMATION

1. Match pin and collar hexes with Super-Key Hex and Socket Hex.
2. See table 1 for corresponding complete driver assy part no.

TABLE 2

A = 0.50	E = 0.75
B = 1.00	F = 1.75
C = 1.50	X = 4.00
D = 2.00	

TABLE 1

COLLAR DRIVING HEX (Matches Socket Hex)	PIN RECESS HEX (Matches Super-Key Hex)	COMPLETE DRIVER ASSY. PART NO.	OFFSET ADAPTOR & SOCKET ASSY. PART NO.	EXTENDED SOCKET ASSY. PART NO.
3/16	1/16	HLA3023-187( )-062T	HLG329-187( )-062T	HLS76-187( )-062T
7/32		HLA3023-218( )-062T	HLG329-218( )-062T	HLS76-218( )-062T
1/4		HLA3023-250( )-062T	HLG329-250( )-062T	HLS76-250( )-062T
9/32		HLA3023-281( )-062T	HLG329-281( )-062T	HLS76-281( )-062T
5/16		HLA3023-312( )-062T	HLG329-312( )-062T	HLS76-312( )-062T
11/32		HLA3023-343( )-062T	HLG329-343( )-062T	HLS76-343( )-062T
7/32	5/64	HLA3023-218( )-078T	HLG329-218( )-078T	HLS76-218( )-078T
1/4		HLA3023-250( )-078T	HLG329-250( )-078T	HLS76-250( )-078T
9/32		HLA3023-281( )-078T	HLG329-281( )-078T	HLS76-281( )-078T
5/16		HLA3023-312( )-078T	HLG329-312( )-078T	HLS76-312( )-078T
11/32		HLA3023-343( )-078T	HLG329-343( )-078T	HLS76-343( )-078T
3/8		HLA3023-375( )-078T	HLG329-375( )-078T	HLS76-375( )-078T
5/16	3/32	HLA3023-312( )-094T	HLG329-312( )-094T	HLS76-312( )-094T
11/32		HLA3023-343( )-094T	HLG329-343( )-094T	HLS76-343( )-094T
3/8		HLA3023-375( )-094T	HLG329-375( )-094T	HLS76-375( )-094T
7/16		HLA3023-437( )-094T	HLG329-437( )-094T	HLS76-437( )-094T
3/8	1/8	HLA3023-375( )-125T	HLG329-375( )-125T	HLS76-375( )-125T
7/16		HLA3023-437( )-125T	HLG329-437( )-125T	HLS76-437( )-125T

INSTALLATION TOOLING

SUPER HLA3025

6 Inch Offset Driver Assembly with Multi-Length Socket and Super-Key™ (T-Series)

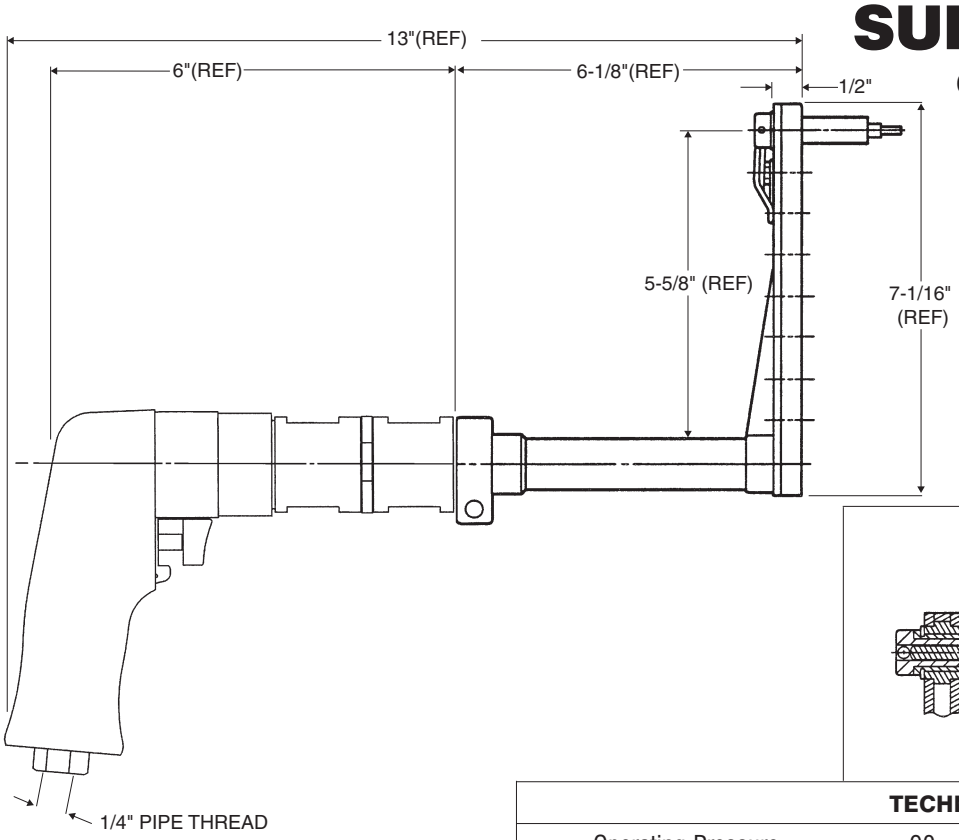

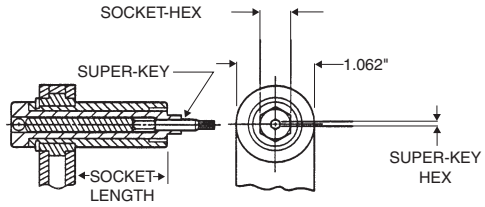

HLS76- ( )( )- ( ) T SOCKET ASSY

DRIVER BASIC PART NO. | SOCKET HEX (REF TABLE 1 OR 2) | SOCKET LENGTH CODE (REF TABLE 2) | SUPER-KEY HEX (REF TABLE 1 OR 2) | SUPER-KEY (T-SERIES)

HLA3025-312(A)-078-T

Example: complete driver assy part no.

ORDERING INFORMATION

1. Match pin and collar hexes with Super-Key Hex and Socket Hex.
2. See table 1 for corresponding complete driver assy part no.

TABLE 2

A = 0.50	E = 0.75
B = 1.00	F = 1.75
C = 1.50	X = 4.00
D = 2.00	

TECHNICAL DATA

Operating Pressure ..... 90 PSIA	Horsepower Rating 0.70
MAX. TORQUE RATING ..... 300 in. lb (Motor) @90 PSIA	Air Consumption ..... 22 SCFM
Socket Speed ..... 250 RPM	Weight ..... 3.8 lb

TABLE 1

COLLAR DRIVING HEX (Matches Socket Hex)	PIN RECESS HEX (Matches Super-Key Hex)	COMPLETE DRIVER ASSY. PART NO.	OFFSET ADAPTOR & SOCKET ASSY. PART NO.	EXTENDED SOCKET ASSY. PART NO.
3/16	1/16	HLA3025-187( )-062T	HLG331-187( )-062T	HLS76-187( )-062T
7/32		HLA3025-218( )-062T	HLG331-218( )-062T	HLS76-218( )-062T
1/4		HLA3025-250( )-062T	HLG331-250( )-062T	HLS76-250( )-062T
9/32		HLA3025-281( )-062T	HLG331-281( )-062T	HLS76-281( )-062T
5/16		HLA3025-312( )-062T	HLG331-312( )-062T	HLS76-312( )-062T
11/32		HLA3025-343( )-062T	HLG331-343( )-062T	HLS76-343( )-062T
7/32	5/64	HLA3025-218( )-078T	HLG331-218( )-078T	HLS76-218( )-078T
1/4		HLA3025-250( )-078T	HLG331-250( )-078T	HLS76-250( )-078T
9/32		HLA3025-281( )-078T	HLG331-281( )-078T	HLS76-281( )-078T
5/16		HLA3025-312( )-078T	HLG331-312( )-078T	HLS76-312( )-078T
11/32		HLA3025-343( )-078T	HLG331-343( )-078T	HLS76-343( )-078T
3/8		HLA3025-375( )-078T	HLG331-375( )-078T	HLS76-375( )-078T
5/16	3/32	HLA3025-312( )-094T	HLG331-312( )-094T	HLS76-312( )-094T
11/32		HLA3025-343( )-094T	HLG331-343( )-094T	HLS76-343( )-094T
3/8		HLA3025-375( )-094T	HLG331-375( )-094T	HLS76-375( )-094T
7/16		HLA3025-437( )-094T	HLG331-437( )-094T	HLS76-437( )-094T
3/8	1/8	HLA3025-375( )-125T	HLG331-375( )-125T	HLS76-375( )-125T
7/16		HLA3025-437( )-125T	HLG331-437( )-125T	HLS76-437( )-125T

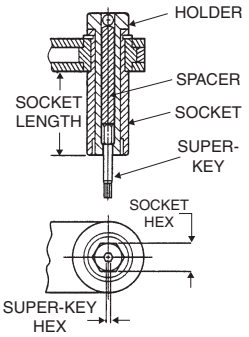

SOCKET END DETAIL

INSTALLATION TOOLING

SUPER HLA2002

Straight Ratchet Wrench Driver Assembly with Multi-Length Socket and Super-Key™ (T-Series)

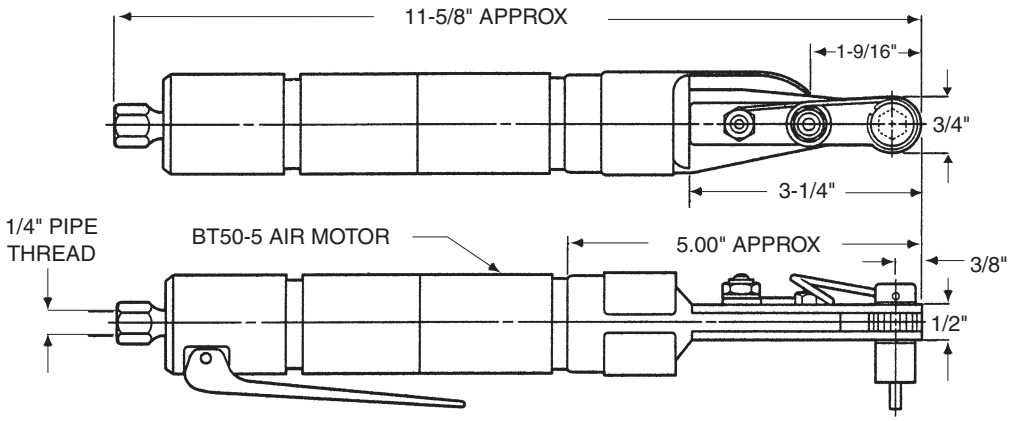

TECHNICAL DATA

Operating Pressure	90 PSIA	Horsepower Rating	0.50
MAX. TORQUE RATING (Motor)	110 in. lb @90 PSIA	Air Consumption	22 SCFM
Socket Speed	250 RPM	Weight	2 lb

DRIVER BASIC PART NO. — SOCKET HEX REF. TABLE 1 — SOCKET LENGTH (REF TABLE 2) — SUPER-KEY HEX (REF TABLE 1) — SUPER-KEY (T-SERIES)

HLA2002-312(A)-078T

Example: complete driver assy. part no.

ORDERING INFORMATION

1. Match pin and collar hexes with Super-Key Hex and Socket Hex.
2. See table 1 for corresponding complete driver assy part no.

TABLE 2

A = 0.50	E = 0.75
B = 1.00	F = 1.75
C = 1.50	X = 4.00
D = 2.00	

TABLE 1

COLLAR DRIVING HEX (Matches Socket Hex)	PIN RECESS HEX (Matches Super-Key Hex)	COMPLETE DRIVER ASSY. PART NO.	OFFSET ADAPTOR & SOCKET ASSY. PART NO.	EXTENDED SOCKET ASSY. PART NO.
3/16	1/16	HLA2002-187( )-062T	HLR252-187( )-062T	HLS76-187( )-062T
7/32		HLA2002-218( )-062T	HLR252-218( )-062T	HLS76-218( )-062T
1/4		HLA2002-250( )-062T	HLR252-250( )-062T	HLS76-250( )-062T
9/32		HLA2002-281( )-062T	HLR252-281( )-062T	HLS76-281( )-062T
5/16		HLA2002-312( )-062T	HLR252-312( )-062T	HLS76-312( )-062T
11/32		HLA2002-343( )-062T	HLR252-343( )-062T	HLS76-343( )-062T
7/32	5/64	HLA2002-218( )-078T	HLR252-218( )-078T	HLS76-218( )-078T
1/4		HLA2002-250( )-078T	HLR252-250( )-078T	HLS76-250( )-078T
9/32		HLA2002-281( )-078T	HLR252-281( )-078T	HLS76-281( )-078T
5/16		HLA2002-312( )-078T	HLR252-312( )-078T	HLS76-312( )-078T
11/32		HLA2002-343( )-078T	HLR252-343( )-078T	HLS76-343( )-078T
3/8		HLA2002-375( )-078T	HLR252-375( )-078T	HLS76-375( )-078T
5/16	3/32	HLA2002-312( )-094T	HLR252-312( )-094T	HLS76-312( )-094T
11/32		HLA2002-343( )-094T	HLR252-343( )-094T	HLS76-343( )-094T
3/8		HLA2002-375( )-094T	HLR252-375( )-094T	HLS76-375( )-094T
7/16		HLA2002-437( )-094T	HLR252-437( )-094T	HLS76-437( )-094T

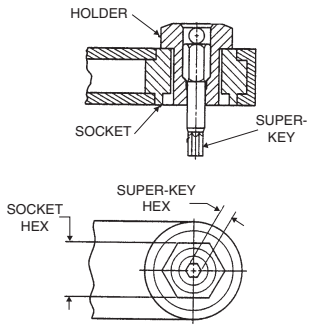

SOCKET END DETAIL

INSTALLATION TOOLING

SUPER HLA2006

Straight Ratchet Wrench Driver Assembly with Flush Socket and Super-Key™ (T-Series)

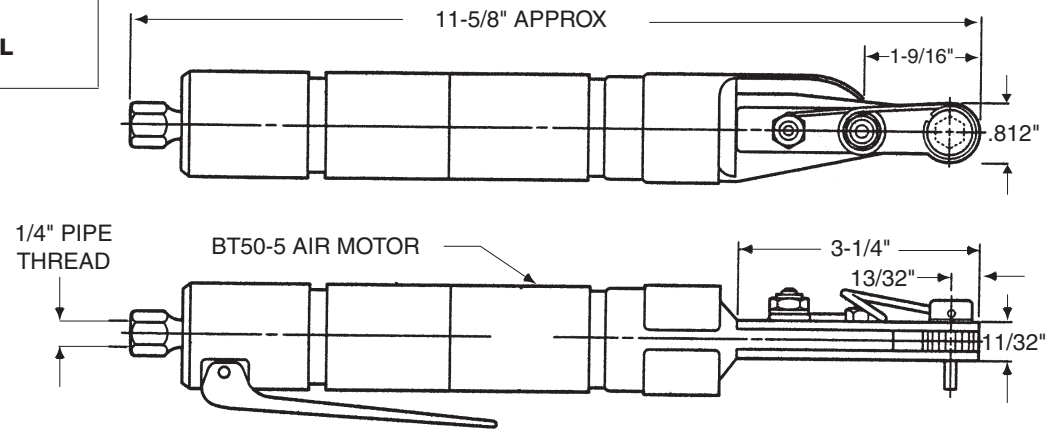

TECHNICAL DATA	
Operating Pressure ..... 90 PSIA	Horsepower Rating 0.50
MAX. TORQUE RATING ..... 110 in. lb (Motor) @90 PSIA	Air Consumption ..... 22 SCFM
Socket Speed ..... 250 RPM	Weight ..... 2 lb

TABLE 1

COLLAR DRIVING HEX (Matches Socket Hex)	PIN RECESS HEX (Matches Super-Key Hex)	COMPLETE DRIVER ASSY. PART NO.	OFFSET ADAPTOR & SOCKET ASSY. PART NO.
3/16	1/16	HLA2006-187-062T	HLR256-187-062T
7/32		HLA2006-218-062T	HLR256-218-062T
1/4		HLA2006-250-062T	HLR256-250-062T
9/32		HLA2006-281-062T	HLR256-281-062T
5/16		HLA2006-312-062T	HLR256-312-062T
11/32		HLA2006-343-062T	HLR256-343-062T
7/32	5/64	HLA2006-218-078T	HLR256-218-078T
1/4		HLA2006-250-078T	HLR256-250-078T
9/32		HLA2006-281-078T	HLR256-281-078T
5/16		HLA2006-312-078T	HLR256-312-078T
11/32		HLA2006-343-078T	HLR256-343-078T
3/8		HLA2006-375-078T	HLR256-375-078T
5/16	3/32	HLA2006-312-094T	HLR256-312-094T
11/32		HLA2006-343-094T	HLR256-343-094T
3/8		HLA2006-375-094T	HLR256-375-094T
7/16		HLA2006-437-094T	HLR256-437-094T

DRIVER BASIC PART NO. — SOCKET HEX REF. TABLE 1 — SUPER-KEY HEX REF. TABLE 1 — SUPER-KEY (T-SERIES)

HLA2006-312-078T

Example: complete driver assy. part no.

ORDERING INFORMATION

1. Match pin and collar hexes with Super-Key Hex and Socket Hex.
2. See table 1 for corresponding complete driver assy part no.

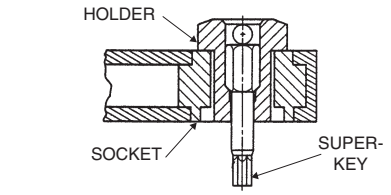

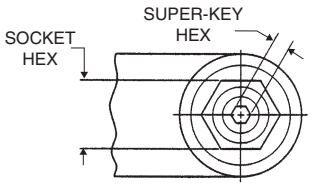

SOCKET END DETAIL

INSTALLATION TOOLING

SUPER HLA2008

20° Offset Ratchet Wrench Driver Assembly with Flush Socket and Super-Key™ (T-Series)

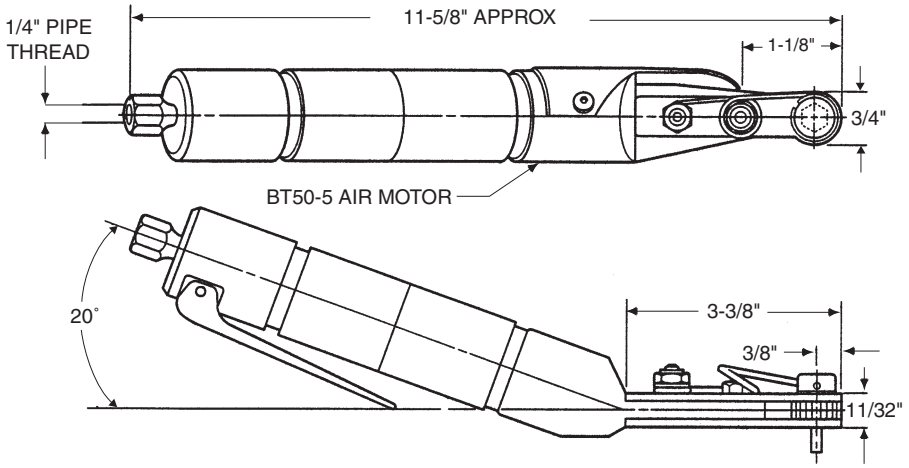

TECHNICAL DATA			
Operating Pressure	90 PSIA	Horsepower Rating	0.50
MAX. TORQUE RATING (Motor)	110 in. lb @90 PSIA	Air Consumption	22 SCFM
Socket Speed	250 RPM	Weight	2 lb

TABLE 1

COLLAR DRIVING HEX (Matches Socket Hex)	PIN RECESS HEX (Matches Super-Key Hex)	COMPLETE DRIVER ASSY. PART NO.	OFFSET ADAPTOR & SOCKET ASSY. PART NO.
3/16	1/16	HLA2008-187-062T	HLR255-187-062T
7/32		HLA2008-218-062T	HLR255-218-062T
1/4		HLA2008-250-062T	HLR255-250-062T
9/32		HLA2008-281-062T	HLR255-281-062T
5/16		HLA2008-312-062T	HLR255-312-062T
11/32		HLA2008-343-062T	HLR255-343-062T
7/32	5/64	HLA2008-218-078T	HLR255-218-078T
1/4		HLA2008-250-078T	HLR255-250-078T
9/32		HLA2008-281-078T	HLR255-281-078T
5/16		HLA2008-312-078T	HLR255-312-078T
11/32		HLA2008-343-078T	HLR255-343-078T
3/8		HLA2008-375-078T	HLR255-375-078T
5/16	3/32	HLA2008-312-094T	HLR255-312-094T
11/32		HLA2008-343-094T	HLR255-343-094T
3/8		HLA2008-375-094T	HLR255-375-094T
7/16		HLA2008-437-094T	HLR255-437-094T

DRIVER BASIC PART NO. — SOCKET HEX REF. TABLE 1 — SUPER-KEY HEX REF. TABLE 1 — SUPER-KEY (T-SERIES)

HLA2008-312-078T

Example: complete driver assy. part no.

ORDERING INFORMATION

1. Match pin and collar hexes with Super-Key Hex and Socket Hex.
2. See table 1 for corresponding complete driver assy part no.

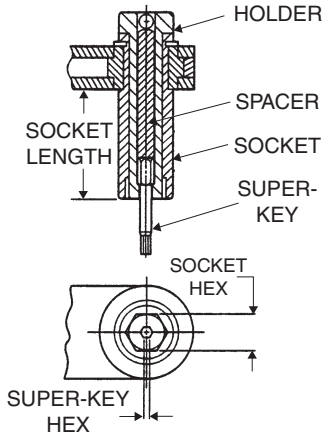

SOCKET END DETAIL

INSTALLATION TOOLING

SUPER HLA2016

20° Offset Ratchet Wrench Driver Assembly with Multi-Length Socket and Super-Key™ (T-Series)

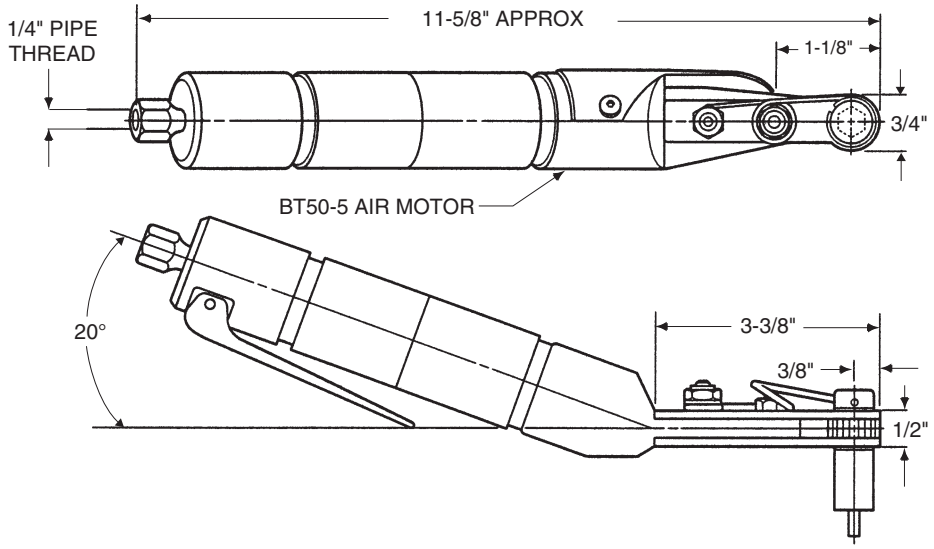

TECHNICAL DATA

Operating Pressure	90 PSIA	Horsepower Rating	0.50
MAX. TORQUE RATING (Motor)	110 in. lb @90 PSIA	Air Consumption	22 SCFM
Socket Speed	250 RPM	Weight	2 lb

DRIVER BASIC PART NO. — SOCKET HEX REF. TABLE 1 — SOCKET LENGTH (REF TABLE 2) — SUPER-KEY HEX (REF TABLE 1) — SUPER-KEY (T-SERIES)

HLA2016-312(E)-078T

Example: complete driver assy. part no.

ORDERING INFORMATION

1. Match pin and collar hexes with Super-Key Hex and Socket Hex.
2. See table 1 for corresponding complete driver assy part no.

TABLE 2

A = 0.50	E = 0.75
B = 1.00	F = 1.75
C = 1.50	X = 4.00
D = 2.00	

TABLE 1

COLLAR DRIVING HEX (Matches Socket Hex)	PIN RECESS HEX (Matches Super-Key Hex)	COMPLETE DRIVER ASSY. PART NO.	OFFSET ADAPTOR & SOCKET ASSY. PART NO.	EXTENDED SOCKET ASSY. PART NO.
3/16	1/16	HLA2016-187( )-062T	HLR251-187( )-062T	HLS76-187( )-062T
7/32		HLA2016-218( )-062T	HLR251-218( )-062T	HLS76-218( )-062T
1/4		HLA2016-250( )-062T	HLR251-250( )-062T	HLS76-250( )-062T
9/32		HLA2016-281( )-062T	HLR251-281( )-062T	HLS76-281( )-062T
5/16		HLA2016-312( )-062T	HLR251-312( )-062T	HLS76-312( )-062T
11/32		HLA2016-343( )-062T	HLR251-343( )-062T	HLS76-343( )-062T
7/32	5/64	HLA2016-218( )-078T	HLR251-218( )-078T	HLS76-218( )-078T
1/4		HLA2016-250( )-078T	HLR251-250( )-078T	HLS76-250( )-078T
9/32		HLA2016-281( )-078T	HLR251-281( )-078T	HLS76-281( )-078T
5/16		HLA2016-312( )-078T	HLR251-312( )-078T	HLS76-312( )-078T
11/32		HLA2016-343( )-078T	HLR251-343( )-078T	HLS76-343( )-078T
3/8		HLA2016-375( )-078T	HLR251-375( )-078T	HLS76-375( )-078T
5/16	3/32	HLA2016-312( )-094T	HLR251-312( )-094T	HLS76-312( )-094T
11/32		HLA2016-343( )-094T	HLR251-343( )-094T	HLS76-343( )-094T
3/8		HLA2016-375( )-094T	HLR251-375( )-094T	HLS76-375( )-094T
7/16		HLA2016-437( )-094T	HLR251-437( )-094T	HLS76-437( )-094T

INSTALLATION TOOLING

HLA2026

Small 20° Offset Ratchet Wrench Tool Assembly with "Quick Change" Thru-Hex Extended Socket

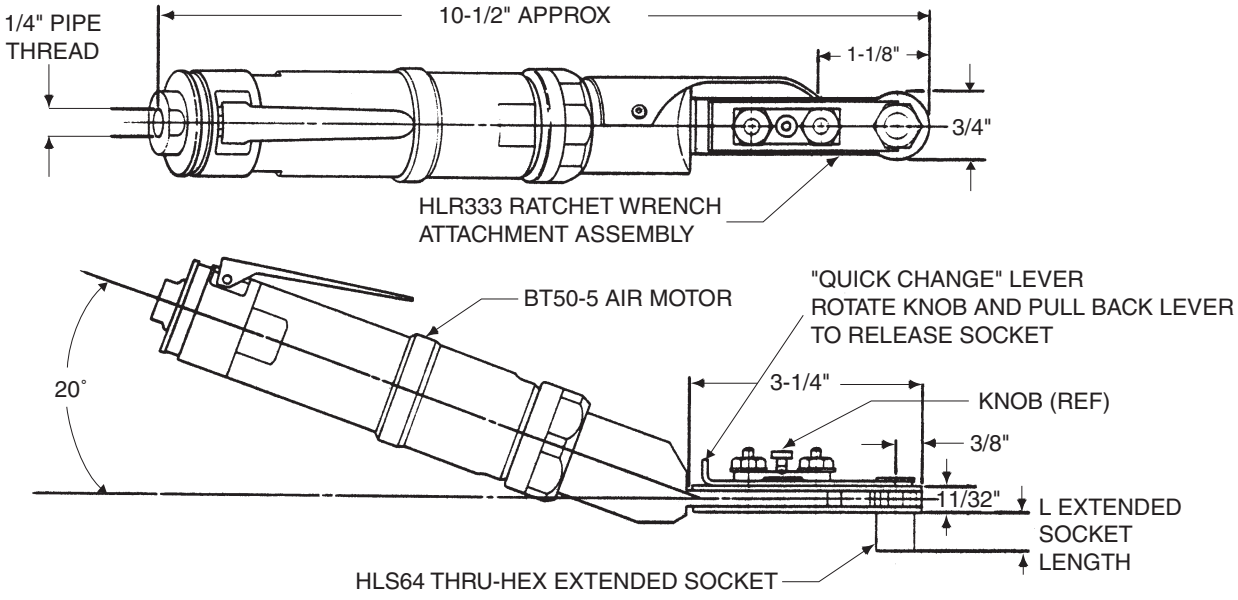

DRIVER BASIC PART NO. — "M" SOCKET HEX REF. TABLE 1 — SOCKET LENGTH (REF TABLE 2)

HLA2026-312(A)

Example: complete driver assy. part no.

ORDERING INFORMATION

1. See table 1 for "M" socket hex to match collar driving hex dimension.
2. See table 2 for socket length code.

TABLE 2

A = 0.50	E = 0.75
B = 1.00	F = 1.75
C = 1.50	X = 4.00
D = 2.00	

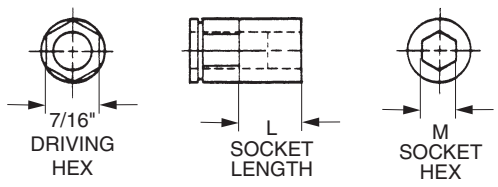

HLS64 THRU-HEX EXTENDED SOCKET

TECHNICAL DATA

Operating Pressure ..... 90 PSIA	Horsepower Rating 0.50
MAX. TORQUE RATING ..... 110 in. lb (Motor) @90 PSIA	Air Consumption ..... 22 SCFM
Socket Speed ..... 250 RPM	Weight ..... 2 lb

TABLE 1

"M" SOCKET HEX (Matches Collar Driving Hex)	COMPLETE TOOL ASSY. PART NO.	RATCHET WRENCH ATTACHMENT ASSY. PART NO. (Ref.)	EXTENDED SOCKET ASSY. PART NO.
3/16	HLA2026-187( )	HLR333-187( )	HLS64-187( )
7/32	HLA2026-218( )	HLR333-218( )	HLS64-218( )
1/4	HLA2026-250( )	HLR333-250( )	HLS64-250( )
9/32	HLA2026-281( )	HLR333-281( )	HLS64-281( )
5/16	HLA2026-312( )	HLR333-312( )	HLS64-312( )
11/32	HLA2026-343( )	HLR333-343( )	HLS64-343( )

INSTALLATION TOOLING

SUPER HLA2033

Small 20° Offset Ratchet Wrench Tool Assembly with Interference Fit Extra Thin Socket

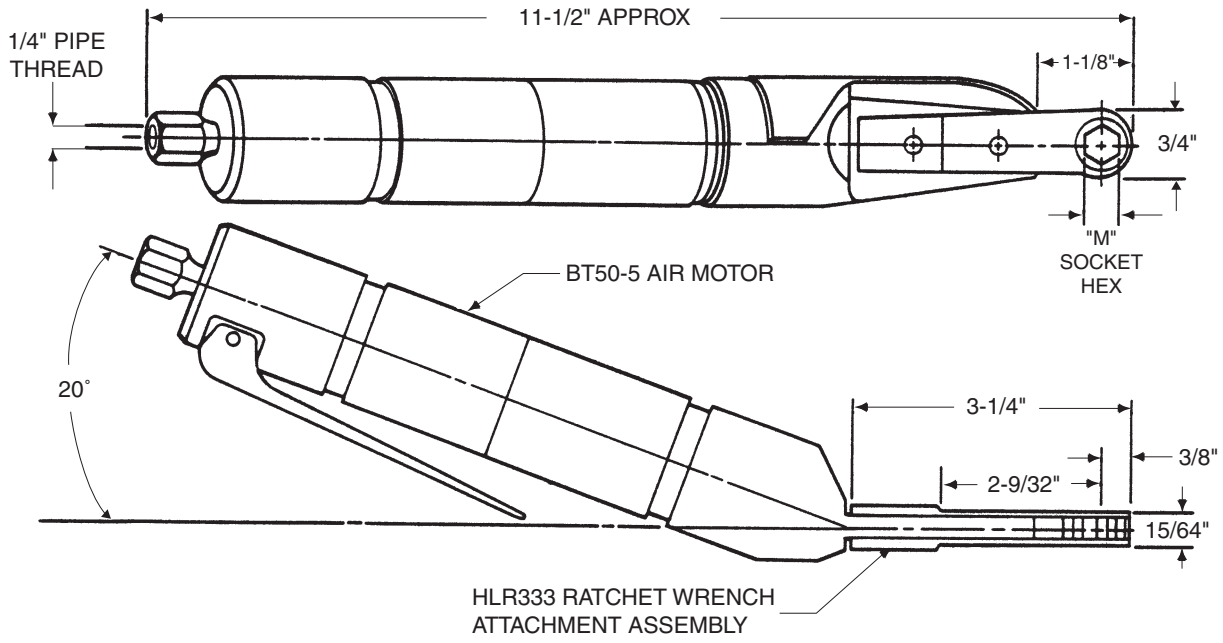

DRIVER BASIC PART NO.
"M" SOCKET HEX REF. TABLE 1

HLA2033-312

Example: complete driver assy. part no.

ORDERING INFORMATION

See table 1 for "M" socket hex to match collar driving hex dimensions

TECHNICAL DATA	
Operating Pressure ..... 90 PSIA	Horsepower Rating 0.50
MAX. TORQUE RATING ..... 110 in. lb (Motor) @90 PSIA	Air Consumption ..... 22 SCFM
Socket Speed ..... 250 RPM	Weight ..... 2 lb

TABLE 1

"M" SOCKET HEX (Matches Collar Driving Hex)	COMPLETE TOOL ASSEMBLY Part No.	RATCHET WRENCH ATTACHMENT ASSY. Part No. (Ref.)
5/16	HLA2033-312	HLR231-312
11/32	HLA2033-343	HLR231-343
3/8	HLA2033-375	HLR231-375

INSTALLATION TOOLING

SUPER HLA2073

Medium 20° Offset Ratchet Wrench Driver Assembly with Thin Flush Socket and Super-Key™ (T-Series)

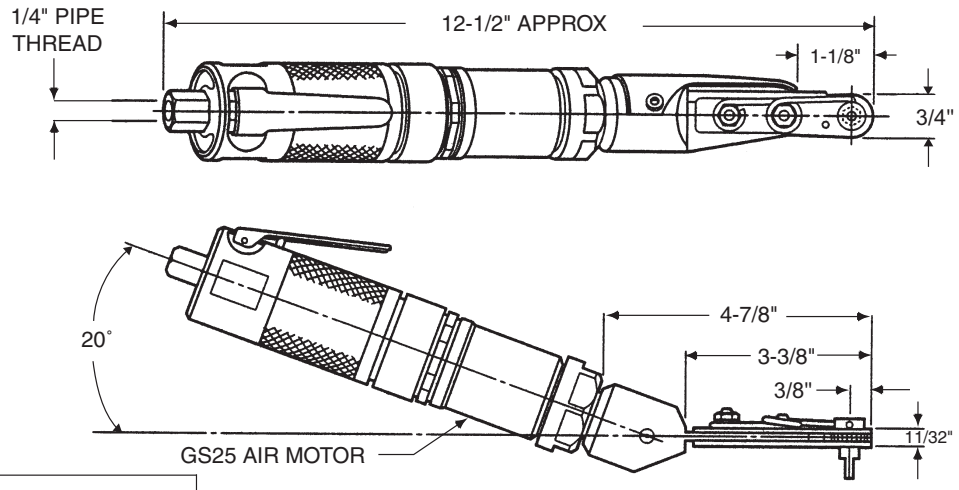

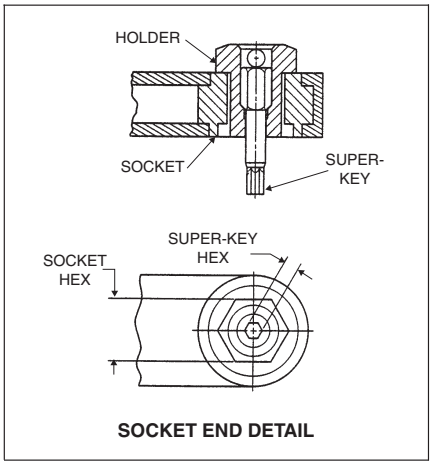

SOCKET END DETAIL

TECHNICAL DATA			
Operating Pressure	90 PSIA	Horsepower Rating	0.50
MAX. TORQUE RATING (Motor)	220 in. lb @90 PSIA	Air Consumption	22 SCFM
Socket Speed	250 RPM	Weight	2 lb

TABLE 1

COLLAR DRIVING HEX (Matches Socket Hex)	PIN RECESS HEX (Matches Super-Key Hex)	COMPLETE DRIVER ASSY. PART NO.	RATCHET WRENCH ATTACHMENT ASSY. PART NO.
3/16	1/16	HLA2073-187-062T	HLR255-187-062T
7/32		HLA2073-218-062T	HLR255-218-062T
1/4		HLA2073-250-062T	HLR255-250-062T
9/32		HLA2073-281-062T	HLR255-281-062T
5/16		HLA2073-312-062T	HLR255-312-062T
11/32		HLA2073-343-062T	HLR255-343-062T
7/32	5/64	HLA2073-218-078T	HLR255-218-078T
1/4		HLA2073-250-078T	HLR255-250-078T
9/32		HLA2073-281-078T	HLR255-281-078T
5/16		HLA2073-312-078T	HLR255-312-078T
11/32		HLA2073-343-078T	HLR255-343-078T
3/8		HLA2073-375-078T	HLR255-375-078T
5/16	3/32	HLA2073-312-094T	HLR255-312-094T
11/32		HLA2073-343-094T	HLR255-343-094T
3/8		HLA2073-375-094T	HLR255-375-094T
7/16		HLA2073-437-094T	HLR255-437-094T
1/2		HLA2073-500-094T	HLR255-500-094T
3/8	1/8	HLA2073-375-125T	HLR255-375-125T
7/16		HLA2073-437-125T	HLR255-437-125T

DRIVER BASIC PART NO. — SOCKET HEX REF. TABLE 1 — SUPER-KEY HEX REF. TABLE 1 — SUPER-KEY (T-SERIES)

HLA2073-312-078-T

Example: complete driver assy. part no.

ORDERING INFORMATION

1. Match pin and collar hexes with Super-Key Hex and Socket Hex.
2. See table 1 for corresponding complete driver assy part no.

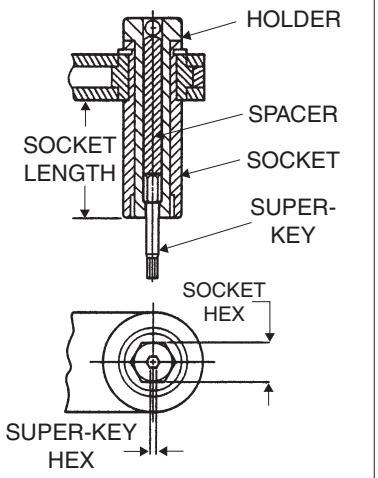

INSTALLATION TOOLING

SUPER HLA2075

Medium 20° Offset Ratchet Wrench Driver Assembly with Multi-length Socket and Super-Key™ (T-Series)

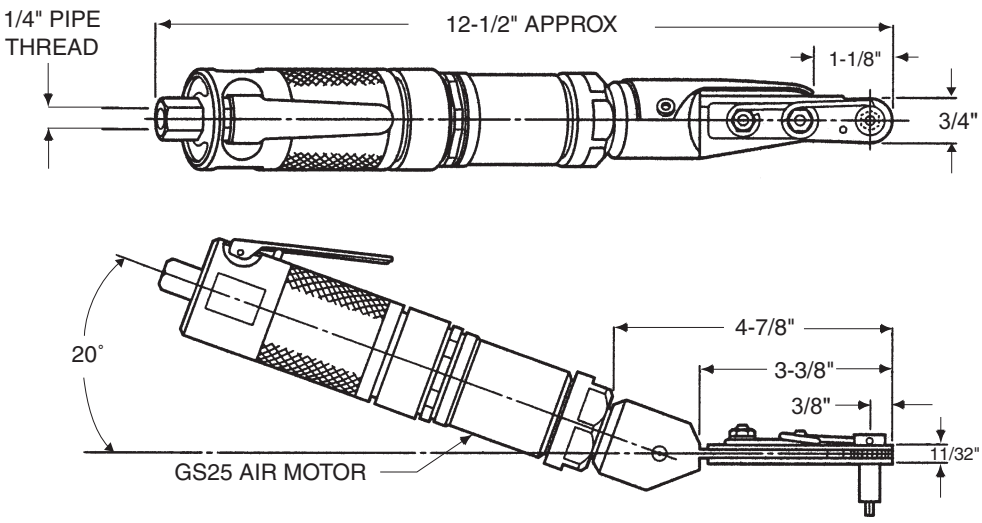

TECHNICAL DATA

Operating Pressure	90 PSIA	Horsepower Rating	0.50
MAX. TORQUE RATING (Motor)	220 in. lb @90 PSIA	Air Consumption	22 SCFM
Socket Speed	250 RPM	Weight	2 lb

DRIVER BASIC PART NO. — SOCKET HEX REF. TABLE 1 — SOCKET LENGTH (REF TABLE 2) — SUPER-KEY HEX REF. TABLE 1. — SUPER-KEY (T-SERIES)

HLA2075-312(A)-078T

Example: complete driver assy. part no.

ORDERING INFORMATION

1. Match pin and collar hexes with Super-Key Hex and Socket Hex.
2. See table 1 for corresponding complete driver assy part no.

TABLE 2

A = 0.50	E = 0.75
B = 1.00	F = 1.75
C = 1.50	X = 4.00
D = 2.00	

TABLE 1

COLLAR DRIVING HEX (Matches Socket Hex)	PIN RECESS HEX (Matches Super-Key Hex)	COMPLETE DRIVER ASSY. PART NO.	OFFSET ADAPTOR & SOCKET ASSY. PART NO.	EXTENDED SOCKET ASSY. PART NO.
3/16	1/16	HLA2075-187( )-062T	HLR206-187( )-062T	HLS78-187( )-062T
7/32		HLA2075-218( )-062T	HLR206-218( )-062T	HLS78-218( )-062T
1/4		HLA2075-250( )-062T	HLR206-250( )-062T	HLS78-250( )-062T
9/32		HLA2075-281( )-062T	HLR206-281( )-062T	HLS78-281( )-062T
5/16		HLA2075-312( )-062T	HLR206-312( )-062T	HLS78-312( )-062T
11/32		HLA2075-343( )-062T	HLR206-343( )-062T	HLS78-343( )-062T
7/32	5/64	HLA2075-218( )-078T	HLR206-218( )-078T	HLS78-218( )-078T
1/4		HLA2075-250( )-078T	HLR206-250( )-078T	HLS78-250( )-078T
9/32		HLA2075-281( )-078T	HLR206-281( )-078T	HLS78-281( )-078T
5/16		HLA2075-312( )-078T	HLR206-312( )-078T	HLS78-312( )-078T
11/32		HLA2075-343( )-078T	HLR206-343( )-078T	HLS78-343( )-078T
3/8		HLA2075-375( )-078T	HLR206-375( )-078T	HLS78-375( )-078T
5/16	3/32	HLA2075-312( )-094T	HLR206-312( )-094T	HLS78-312( )-094T
11/32		HLA2075-343( )-094T	HLR206-343( )-094T	HLS78-343( )-094T
3/8		HLA2075-375( )-094T	HLR206-375( )-094T	HLS78-375( )-094T
7/16		HLA2075-437( )-094T	HLR206-437( )-094T	HLS78-437( )-094T
1/2		HLA2075-500( )-094T	HLR206-500( )-094T	HLS78-500( )-094T
3/8	1/8	HLA2075-375( )-125T	HLR206-375( )-125T	HLS78-375( )-125T
7/16		HLA2075-437( )-125T	HLR206-437( )-125T	HLS78-437( )-125T
1/2		HLA2075-500( )-125T	HLR206-500( )-125T	HLS78-500( )-125T

INSTALLATION TOOLING

HLA3000

Large Straight Ratchet Wrench Tool Assembly with Flush Socket and Super-Key™ (T-Series)

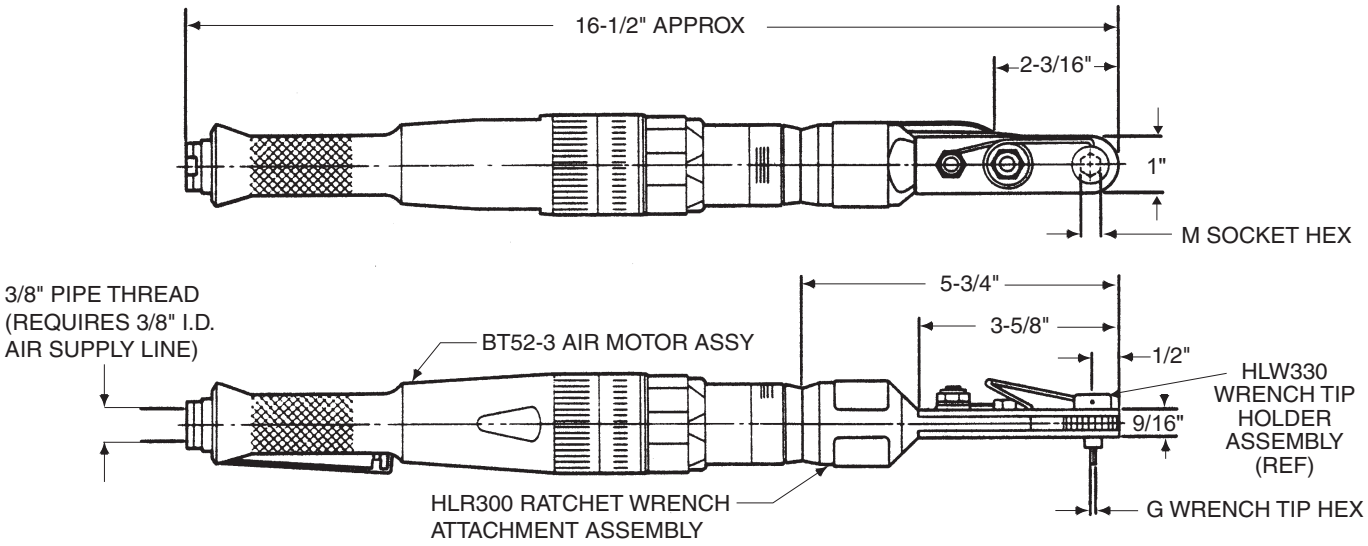

DRIVER BASIC PART NO. — SOCKET HEX REF. TABLE 1 — SUPER-KEY HEX REF. TABLE 1 — SUPER-KEY (T-SERIES)

HLA3000-437-156T

Example: complete driver assy. part no.

ORDERING INFORMATION

1. Match pin and collar hexes with Super-Key Hex and Socket Hex.
2. See table 1 for corresponding complete driver assy part no.

TECHNICAL DATA

Operating Pressure ..... 90 PSIA	Horsepower Rating 0.70
MAX. TORQUE RATING ..... 300 in. lb (Motor) @90 PSIA	Air Consumption ..... 22 SCFM
Socket Speed ..... 250 RPM	Weight ..... 3.8 lb

TABLE 1

"M" SOCKET HEX (Matches Collar Driving Hex)	"G" WRENCH TIP HEX (Matches Pin Recess Hex)	COMPLETE TOOL ASSY. PART NO.	RATCHET WRENCH ATTACHMENT ASSY. PART NO. (Ref.)
3/8	1/8	HLA3000-375-125T	HLR300-375-125T
7/16		HLA3000-437-125T	HLR300-437-125T
1/2		HLA3000-500-125T	HLR300-500-125T
9/16		HLA3000-562-125T	HLR300-562-125T
7/16	5/32	HLA3000-437-156T	HLR300-437-156T
1/2		HLA3000-500-156T	HLR300-500-156T
9/16		HLA3000-562-156T	HLR300-562-156T
5/8		HLA3000-625-156T	HLR300-625-156T

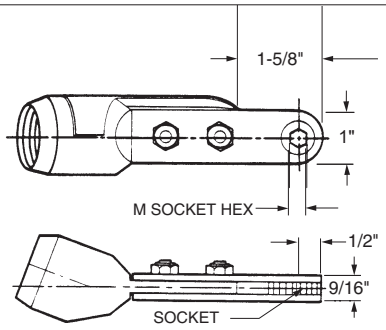

TOOL ASSY. WITH THRU-HEX SOCKET, LESS WRENCH TIP HOLDER ASSY.

INSTALLATION TOOLING

HLA3020

Large 20° Offset Ratchet Wrench Tool Assembly with Flush Socket

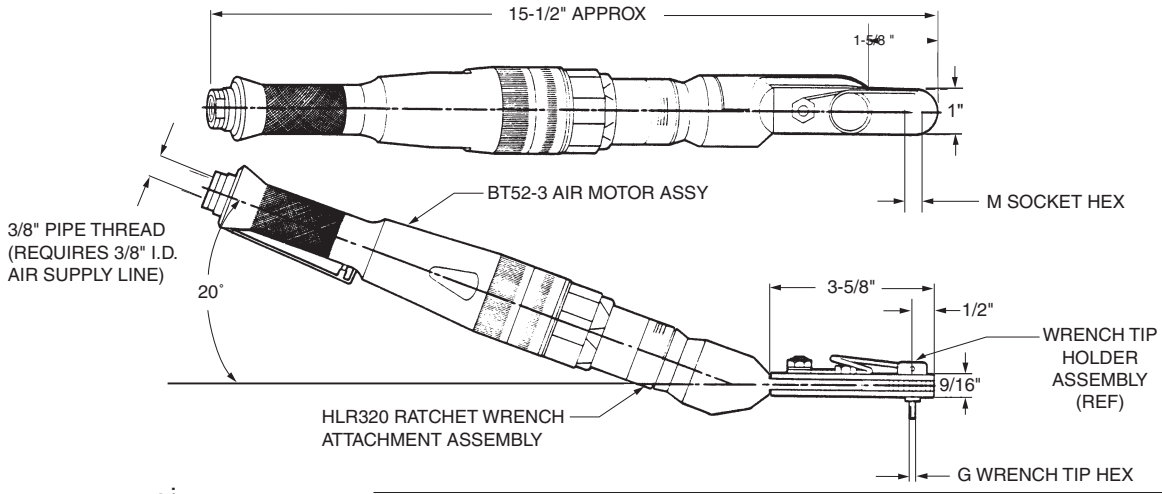

DRIVER BASIC PART NO. — SOCKET HEX REF. TABLE 1 OR 2 — G WRENCH TIP HEX REF. TABLE 1 OR 2.

HLA3020 - 437- 156T

Example 1: complete driver assy. part no.

ORDERING INFORMATION

1. Determine collar driving hex dimensions of the fasteners to be installed.
2. See table 1 for "M" socket hex to match collar driving hex dimensions. Determine complete tool assembly part no. See example 1.
3. See table 2 for complete tool assembly part no.s to obtain an Offset Adaptor Assembly featuring a thru-hex socket, less finder pin and leaf spring.
4. See example 2.

TABLE 2

"M" SOCKET HEX (Matches Collar Driving Hex)	COMPLETE TOOL ASSY. PART NO.	RATCHET WRENCH ATTACHMENT ASSY. PART NO. (Ref.)
3/8	HLA3020H-375	HLRA320H-375
7/16	HLA3020H-437	HLRA320H-437
1/2	HLA3020H-500	HLRA320H-500
9/16	HLA3020H-562	HLRA320H-562
5/8	HLA3020H-625	HLRA320H-625

TECHNICAL DATA

Operating Pressure ..... 90 PSIA	Horsepower Rating 0.70
MAX. TORQUE RATING ..... 300 in. lb (Motor) @90 PSIA	Air Consumption ..... 22 SCFM
Socket Speed ..... 250 RPM	Weight ..... 3.8 lb

TABLE 1

"M" SOCKET HEX (Matches Collar Driving Hex)	"G" WRENCH TIP HEX (Matches Pin Recess Hex)	COMPLETE TOOL ASSY. PART NO.	RATCHET WRENCH ATTACHMENT ASSY. PART NO. (Ref.)
3/8	1/8	HLA3020-375-125T	HLRA320-375-125T
7/16		HLA3020-437-125T	HLRA320-437-125T
1/2		HLA3020-500-125T	HLRA320-500-125T
9/16		HLA3020-562-125T	HLRA320-562-125T
7/16	5/32	HLA3020-437-156T	HLRA320-437-156T
1/2		HLA3020-500-156T	HLRA320-500-156T
9/16		HLA3020-562-156T	HLRA320-562-156T
5/8		HLA3020-625-156T	HLRA320-625-156T

INSTALLATION TOOLING

HLA3502

Large Straight Ratchet Wrench Tool Assembly with Extended Socket

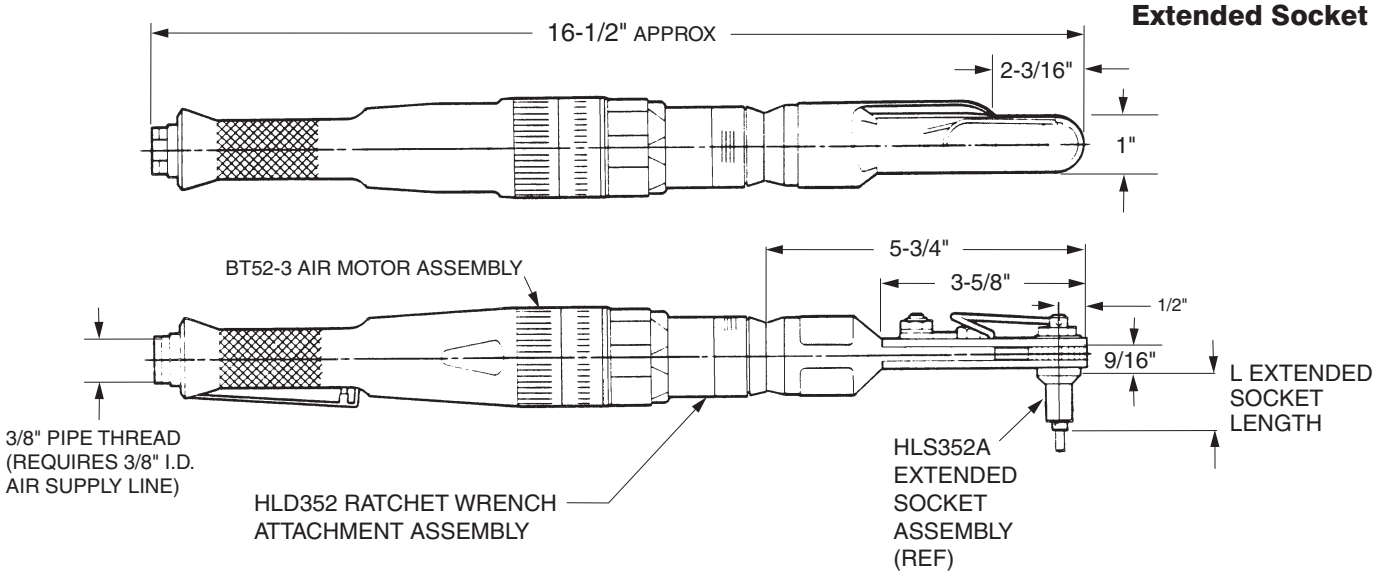

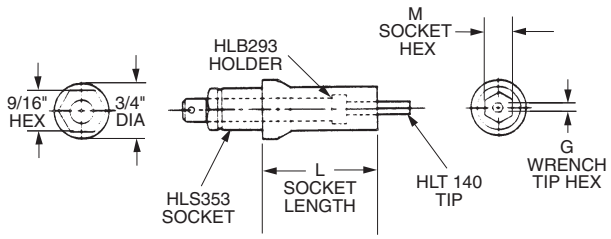

HLS352A EXTENDED SOCKET ASSY

DRIVER BASIC PART NO. | SOCKET HEX REF. TABLE 1 | SOCKET LENGTH (REF TABLE 2) | SUPER-KEY HEX REF. TABLE 1. | SUPER-KEY (T-SERIES)

HLA3502 - 437 (C) - 156 T

Example: complete driver assy. part no.

ORDERING INFORMATION

1. Match pin and collar hexes with Super-Key Hex and Socket Hex.
2. See table 1 for corresponding complete driver assy part no.

TECHNICAL DATA

Operating Pressure	90 PSIA	Horsepower Rating	0.50
MAX. TORQUE RATING (Motor)	300 in. lb @90 PSIA	Air Consumption	22 SCFM
Socket Speed	250 RPM	Weight	2 lb

TABLE 1

COLLAR DRIVING HEX (Matches Socket Hex)	PIN RECESS HEX (Matches Super-Key Hex)	COMPLETE DRIVER ASSY. PART NO.	OFFSET ADAPTOR & SOCKET ASSY. PART NO.	EXTENDED SOCKET ASSY. PART NO.
7/16	1/8	HLA3502-437( )-125T	HLD352-437( )-125T	HLS352A-437( )-125T
1/2		HLA3502-500( )-125T	HLD352-500( )-125T	HLS352A-500( )-125T
9/16		HLA3502-562( )-125T	HLD352-562( )-125T	HLS352A-562( )-125T
5/8		HLA3502-625( )-125T	HLD352-625( )-125T	HLS352A-625( )-125T
11/16		HLA3502-687( )-125T	HLD352-687( )-125T	HLS352A-687( )-125T
7/16	5/32	HLA3502-437( )-156T	HLD352-437( )-156T	HLS352A-437( )-156T
1/2		HLA3502-500( )-156T	HLD352-500( )-156T	HLS352A-500( )-156T
9/16		HLA3502-562( )-156T	HLD352-562( )-156T	HLS352A-562( )-156T
5/8		HLA3502-625( )-156T	HLD352-625( )-156T	HLS352A-625( )-156T
11/16		HLA3502-687( )-156T	HLD352-687( )-156T	HLS352A-687( )-156T

TABLE 2

A = 0.50	E = 0.75
B = 1.00	F = 1.75
C = 1.50	X = 4.00
D = 2.00	

HLS352A EXTENDED SOCKET ASSY.

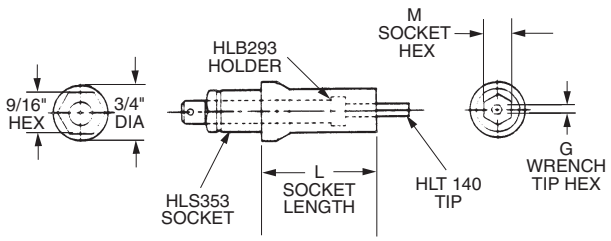

TABLE 2 - SOCKET LENGTH

A = 0.50	E = 0.75
B = 1.00	F = 1.75
C = 1.50	X = 4.00
D = 2.00	

INSTALLATION TOOLING

HLA3522

Large 20° Offset Ratchet Wrench Tool Assembly with Extended Socket and Super-Key™ (T-Series)

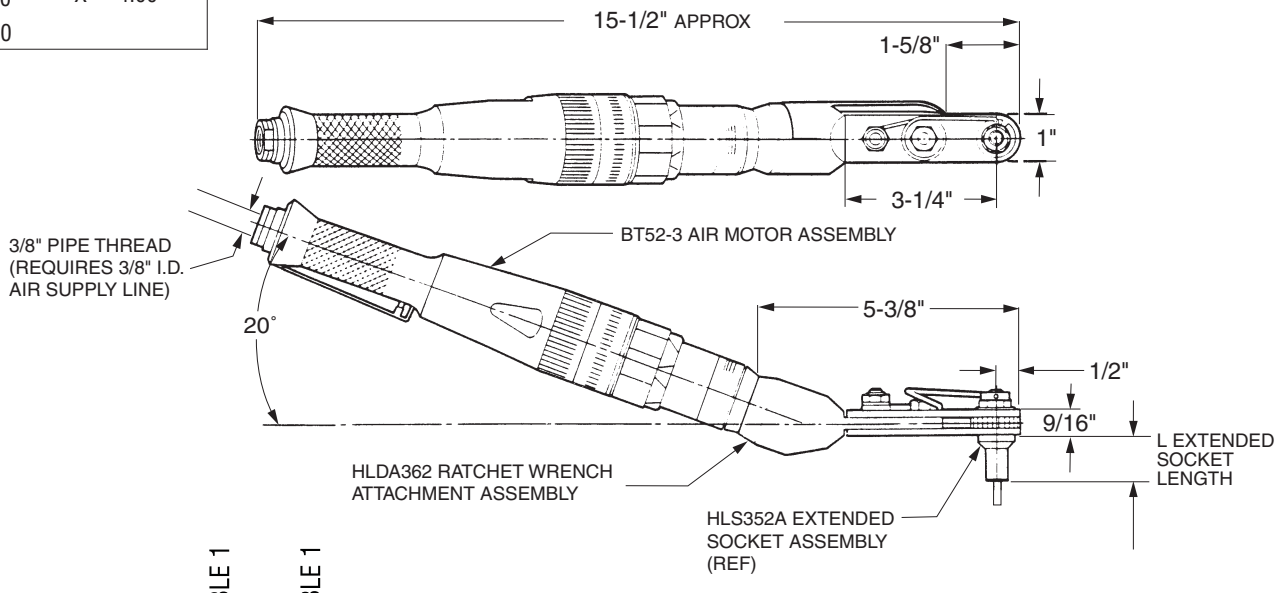

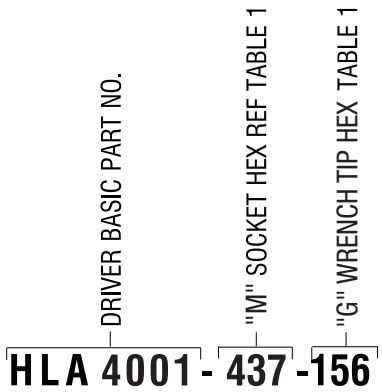

Example 1: complete driver assy. part no.

ORDERING INFORMATION

1. Determine collar driving hex dimensions of the fasteners to be installed.
2. See table 1 for "M" socket hex to match collar driving hex dimensions. Determine complete tool assembly part no. See example 1.
3. See table 2 for complete tool assembly part nos. to obtain an Offset Adaptor Assembly featuring a thru-hex socket, less finder pin and leaf spring.
4. See example 2.

TECHNICAL DATA

Operating Pressure ..... 90 PSIA	Horsepower Rating 0.50
MAX. TORQUE RATING ..... 300 in. lb (Motor) @90 PSIA	Air Consumption ..... 22 SCFM
Socket Speed ..... 250 RPM	Weight ..... 2 lb

TABLE 1

"M" SOCKET HEX (Matches Collar Driving Hex)	COMPLETE TOOL ASSY.	RATCHET WRENCH ATTACHMENT ASSY.	EXTENDED SOCKET ASSY.
7/16	HLA3522-437( )-125T	HLDA362-437( )-125T	HLS352A-437( )-125T
1/2	HLA3522-500( )-125T	HLDA362-500( )-125T	HLS352A-500( )-125T
9/16	HLA3522-562( )-125T	HLDA362-562( )-125T	HLS352A-562( )-125T
5/8	HLA3522-625( )-125T	HLDA362-625( )-125T	HLS352A-625( )-125T
11/16	HLA3522-687( )-125T	HLDA362-687( )-125T	HLS352A-687( )-125T
7/16	HLA3522-437( )-156T	HLDA362-437( )-156T	HLS352A-437( )-156T
1/2	HLA3522-500( )-156T	HLDA362-500( )-156T	HLS352A-500( )-156T
9/16	HLA3522-562( )-156T	HLDA362-562( )-156T	HLS352A-562( )-156T
5/8	HLA3522-625( )-156T	HLDA362-625( )-156T	HLS352A-625( )-156T
11/16	HLA3522-687( )-156T	HLDA362-687( )-156T	HLS352A-687( )-156T

INSTALLATION TOOLING

HLA4001

Large Straight Heavy Duty Ratchet Wrench Tool Assembly with Flush Socket

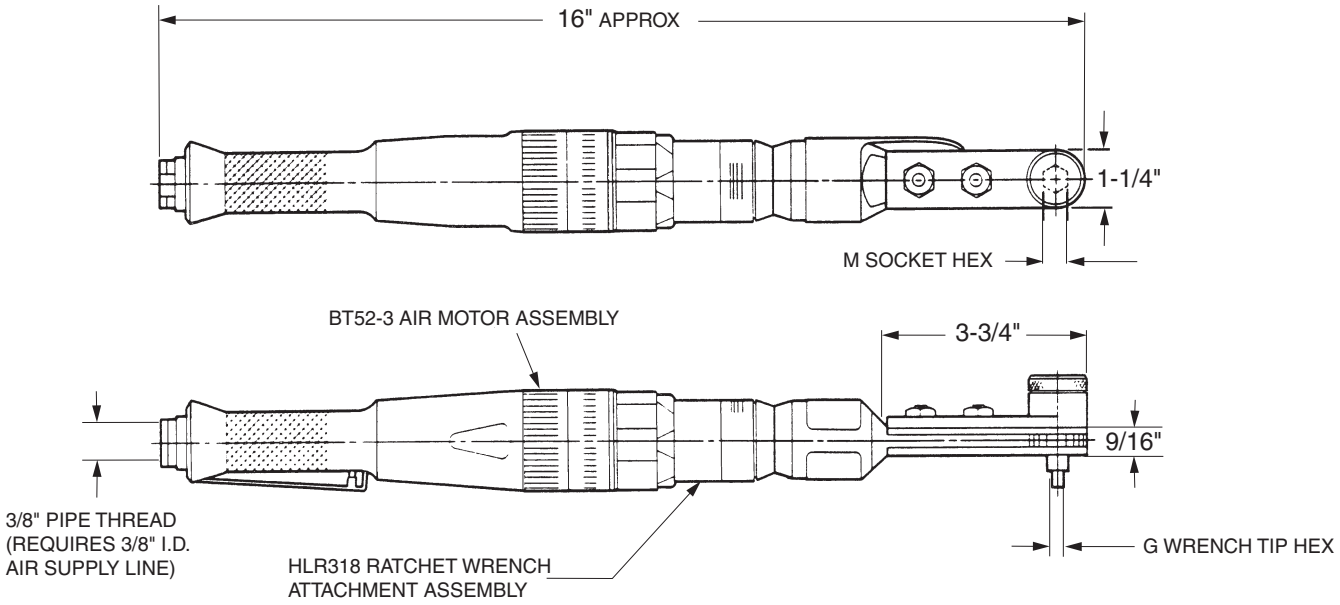

DRIVER BASIC PART NO. — "M" SOCKET HEX REF TABLE 1 — "G" WRENCH TIP HEX TABLE 1

HLA 4001 - 437 -156

Example 1: complete driver assy. part no.

ORDERING INFORMATION

1. Determine collar driving hex and pin recess hex dimensions of the fasteners to be installed.
2. See table 1 for "M" socket hex & "G" wrench tip combo to match collar and pin dimensions. Determine complete tool assembly part no.

TECHNICAL DATA

Operating Pressure ..... 90 PSIA	Horsepower Rating 0.65
MAX. TORQUE RATING ..... 400 in. lb (Motor) @90 PSIA	Air Consumption ..... 30 CFM
Socket Speed ..... 170 RPM	Weight ..... 4.2 lb

TABLE 1

"M" SOCKET HEX (Matches Socket Hex)	"G" WRENCH TIP HEX (Matches Super-Key Hex)	COMPLETE TOOL ASSY. PART NO.	RATCHET WRENCH ATTACHMENT ASSY. PART NO. (REF)
7/16	1/8	HLA4001-437-125	HLR318-437-125
1/2		HLA4001-500-125	HLR318-500-125
9/16		HLA4001-562-125	HLR318-562-125
5/8		HLA4001-625-125	HLR318-625-125
11/16		HLA4001-687-125	HLR318-687-125
7/16	5/32	HLA4001-437-156	HLR318-437-156
1/2		HLA4001-500-156	HLR318-500-156
9/16		HLA4001-562-156	HLR318-562-156
5/8		HLA4001-625-156	HLR318-625-156
11/16		HLA4001-687-156	HLR318-687-156
9/16	3/16	HLA4001-562-187	HLR318-562-187
3/4		HLA4001-750-187	HLR318-750-187
11/16	7/32	HLA4001-687-218	HLR318-687-218

INSTALLATION TOOLING

HLA4007

Large Straight Heavy Duty Ratchet Wrench Tool Assembly with "Quick Change" Extended Socket

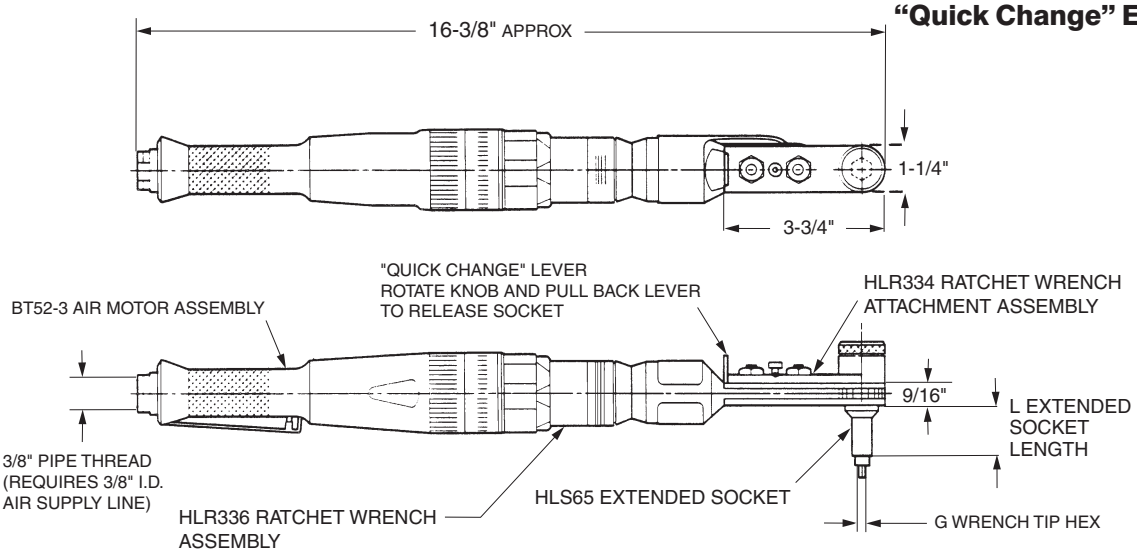

U.S. Patent 4,924,734

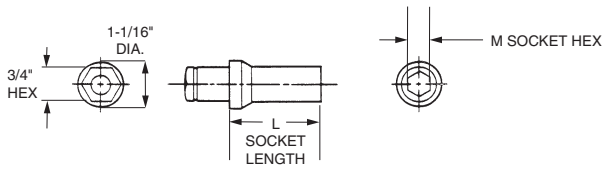

HLS65 EXTENDED SOCKET

TECHNICAL DATA

Operating Pressure ..... 90 PSIA	Horsepower Rating 0.65
MAX. TORQUE RATING ..... 400 in. lb (Motor) @90 PSIA	Air Consumption ..... 30 CFM
Socket Speed ..... 170 RPM	Weight ..... 4.2 lb

DRIVER BASIC PART NO. — "M" SOCKET HEX REF. TABLE 1 — "L" EXTENDED SOCKET LENGTH (REF TABLE 2) — "G" WRENCHTIP HEX REF. TABLE 1.

HLA4007 - 437 (F) - 156

Example: complete driver assy. part no.

ORDERING INFORMATION

1. Determine collar driving hex and pin recess hex dimensions of the fasteners to be installed.
2. See table 1 for "M" socket hex & "G" wrench tip combo to match collar and pin dimensions. Determine complete tool assembly part no.
3. See table 2 for "L" extended socket length

TABLE 2

A = 0.50	E = 0.75
B = 1.00	F = 1.75
C = 1.50	X = 4.00
D = 2.00	

TABLE 1

"M" SOCKET HEX (Matches Collar Driving Hex)	"G" WRENCH TIP HEX (Matches Pin Recess Hex)	COMPLETE TOOL ASSY. PART NO.	RATCHET WRENCH ATTACHMENT ASSY. PART NO. (REF.)	EXTENEDED SOCKET ASSY. PART NO.
7/16	1/8	HLA4007-437( )-125	HLR336-437( )-125	HLS65-437( )
1/2		HLA4007-500( )-125	HLR336-500( )-125	HLS65-500( )
9/16		HLA4007-562( )-125	HLR336-562( )-125	HLS65-562( )
5/8		HLA4007-625( )-125	HLR336-625( )-125	HLS65-625( )
11/16		HLA4007-687( )-125	HLR336-687( )-125	HLS65-687( )
7/16	5/32	HLA4007-437( )-156	HLR336-437( )-156	HLS65-437( )
1/2		HLA4007-500( )-156	HLR336-500( )-156	HLS65-500( )
9/16		HLA4007-562( )-156	HLR336-562( )-156	HLS65-562( )
5/8		HLA4007-625( )-156	HLR336-625( )-156	HLS65-625( )
11/16		HLA4007-687( )-156	HLR336-687( )-156	HLS65-687( )
9/16	3/16	HLA4007-562( )-187	HLR336-562( )-187	HLS65-562( )
3/4		HLA4007-750( )-187	HLR336-750( )-187	HLS65-750( )
11/16	7/32	HLA4007-687( )-218	HLR336-687( )-218	HLS65-687( )

INSTALLATION TOOLING

HLA4008

Large 20° Offset Heavy Duty Ratchet Wrench Tool Assembly with "Quick Change" Extended Socket

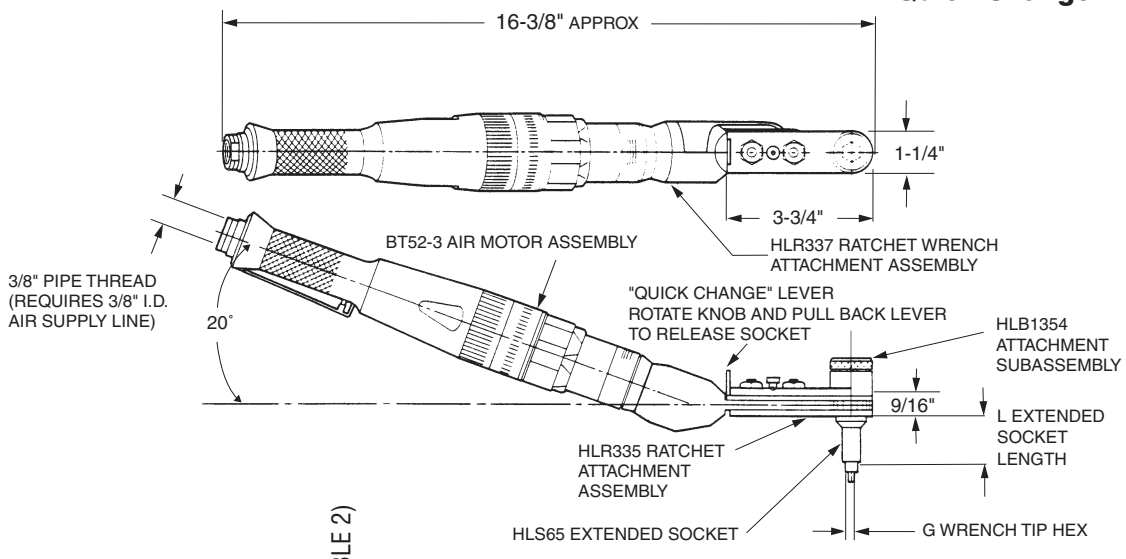

U.S. Patent 4,924,734

DRIVER BASIC PART NO. — "M" SOCKET HEX REF. TABLE 1 — "L" EXTENDED SOCKET LENGTH (REF TABLE 2) — "G" WRENCH TIP HEX REF. TABLE 1.

HLA4008 - 500 (E) - 156

Example: complete driver assy. part no.

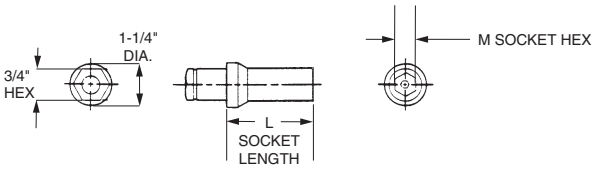

HLS65 EXTENDED SOCKET

TECHNICAL DATA

Operating Pressure ..... 90 PSIA	Horsepower Rating 0.65
MAX. TORQUE RATING ..... 400 in. lb (Motor) @90 PSIA	Air Consumption ..... 30 CFM
Socket Speed ..... 170 RPM	Weight ..... 4.2 lb

ORDERING INFORMATION

1. Determine collar driving hex and pin recess hex dimensions of the fasteners to be installed.
2. See table 1 for "M" socket hex & "G" wrench tip combo to match collar and pin dimensions. Determine complete tool assembly part no.
3. See table 2 for "L" extended socket length

TABLE 2

A = 0.50	E = 0.75
B = 1.00	F = 1.75
C = 1.50	X = 4.00
D = 2.00	

TABLE 1

"M" SOCKET HEX (Matches Collar Driving Hex)	"G" WRENCH TIP HEX (Matches Pin Recess Hex)	COMPLETE TOOL ASSY. PART NO.	RATCHET WRENCH ATTACHMENT ASSY. PART NO. (REF.)	EXTENEDED SOCKET ASSY. PART NO.
7/16	1/8	HLA4008-437( )-125	HLR337-437( )-125	HLS65-437( )
1/2		HLA4008-500( )-125	HLR337-500( )-125	HLS65-500( )
9/16		HLA4008-562( )-125	HLR337-562( )-125	HLS65-562( )
5/8		HLA4008-625( )-125	HLR337-625( )-125	HLS65-625( )
11/16		HLA4008-687( )-125	HLR337-687( )-125	HLS65-687( )
7/16	5/32	HLA4008-437( )-156	HLR337-437( )-156	HLS65-437( )
1/2		HLA4008-500( )-156	HLR337-500( )-156	HLS65-500( )
9/16		HLA4008-562( )-156	HLR337-562( )-156	HLS65-562( )
5/8		HLA4008-625( )-156	HLR337-625( )-156	HLS65-625( )
11/16		HLA4008-687( )-156	HLR337-687( )-156	HLS65-687( )
9/16	3/16	HLA4008-562( )-187	HLR337-562( )-187	HLS65-562( )
3/4		HLA4008-750( )-187	HLR337-750( )-187	HLS65-750( )
11/16	7/32	HLA4008-687( )-218	HLR337-687( )-218	HLS65-687( )

INSTALLATION TOOLING

HLA4020

Large 20° Offset Heavy Duty Ratchet Wrench Tool Assembly with Flush Socket

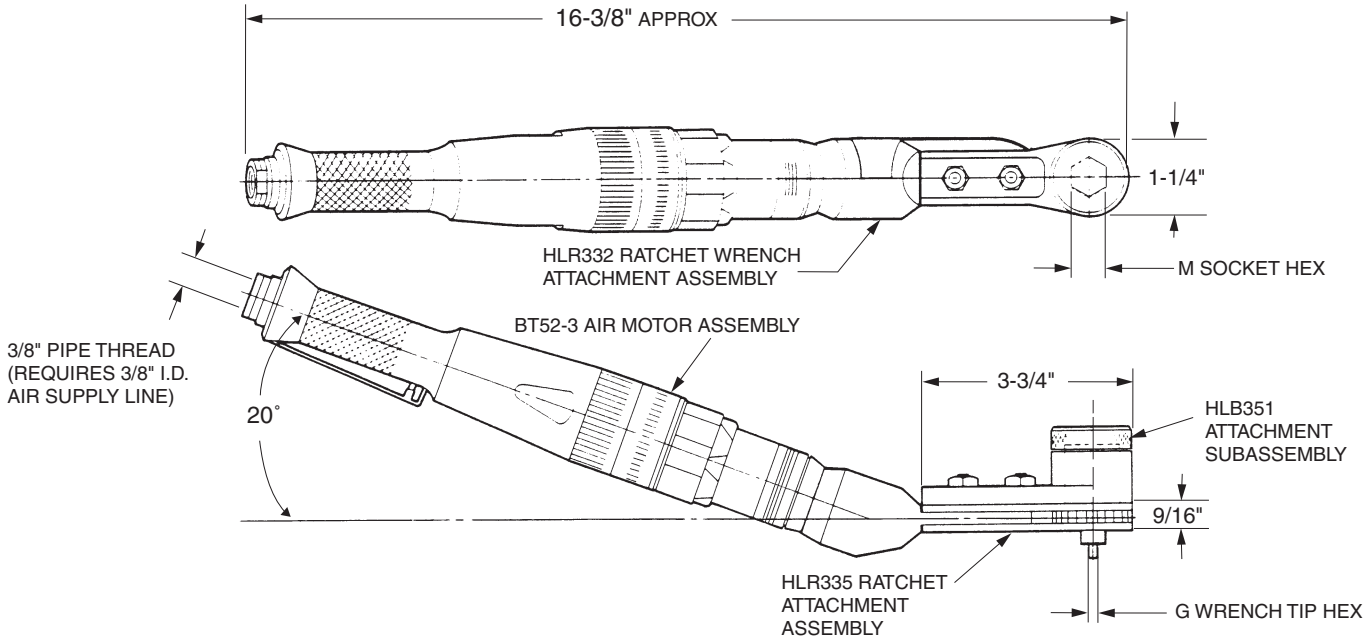

TECHNICAL DATA

Operating Pressure	90 PSIA	Horsepower Rating	0.65
MAX. TORQUE RATING (Motor)	400 in. lb @90 PSIA	Air Consumption	30 CFM
Socket Speed	170 RPM	Weight	4.2 lb

TABLE 1

"M" SOCKET HEX (Matches Socket Hex)	"G" WRENCH HEX (Matches Super-Key Hex)	COMPLETE TOOL ASSY. PART NO.	OFFSET ADAPTOR & SOCKET ASSY. PART NO.	EXTENDED SOCKET ASSY. PART NO. (REF.)	RATCHET ATTACHMENT ASSY. PART NO. (REF.)
7/16	1/8	HLA4020-437-125	HLR332-437-125	HLB351-437-125	HLR335-437
1/2		HLA4020-500-125	HLR332-500-125	HLB351-500-125	HLR335-500
9/16		HLA4020-562-125	HLR332-562-125	HLB351-562-125	HLR335-562
5/8		HLA4020-625-125	HLR332-625-125	HLB351-625-125	HLR335-625
11/16		HLA4020-687-125	HLR332-687-125	HLB351-687-125	HLR335-687
7/16	5/32	HLA4020-437-156	HLR332-437-156	HLB351-437-156	HLR335-437
1/2		HLA4020-500-156	HLR332-500-156	HLB351-500-156	HLR335-500
9/16		HLA4020-562-156	HLR332-562-156	HLB351-562-156	HLR335-562
5/8		HLA4020-625-156	HLR332-625-156	HLB351-625-156	HLR335-625
11/16		HLA4020-687-156	HLR332-687-156	HLB351-687-156	HLR335-687
9/16	3/16	HLA4020-562-187	HLR332-562-187	HLB351-562-187	HLR335-562
3/4		HLA4020-750-187	HLR332-750-187	HLB351-750-187	HLR335-750
11/16	7/32	HLA4020-687-218	HLR332-687-218	HLB351-687-218	HLR335-687

DRIVER BASIC PART NO. — "M" SOCKET HEX REF. TABLE 1 — "G" WRENCHTIP HEX REF. TABLE 1.

HLA4020 - 437 - 156

Example: complete driver assy. part no.

ORDERING INFORMATION

1. Determine collar driving hex and pin recess hex dimensions of the fasteners to be installed.
2. See table 1 for "M" socket hex & "G" wrench tip combo to match collar and pin dimensions. Determine complete tool assembly part no.

INSTALLATION TOOLING

HLA7000

Large Straight Heavy Duty Ratchet Wrench Tool Assembly with Flush Socket

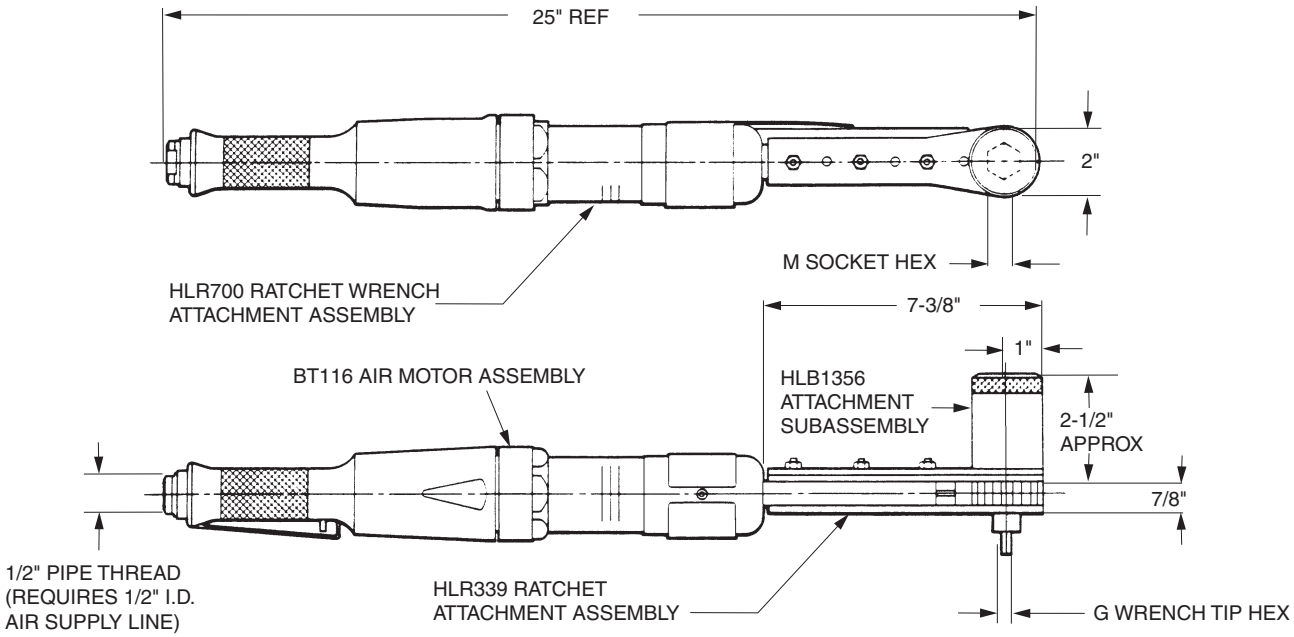

DRIVER BASIC PART NO. — "M" SOCKET HEX REF. TABLE 1 — "G" WRENCH TIP HEX REF. TABLE 1

HLA7000 - 625 - 156

Example: complete driver assy. part no.

TECHNICAL DATA

Operating Pressure	90 PSIA	Horsepower Rating	2.70
MAX. TORQUE RATING (Motor)	185 ft. lb @90 PSIA	Air Consumption	55 CFM
Socket Speed	75 RPM	Weight	15 lb

TABLE 1

"M" SOCKET HEX (Matches Collar Driving Hex)	"G" WRENCH TIP HEX (Matches Pin Recess Hex)	COMPLETE TOOL ASSY. PART NO.	RATCHET WRENCH ATTACHMENT ASSY. PART NO. (REF.)	ATTACHMENT SUB-ASSY. PART NO. (REF.)
1/2	5/32	HLA7000-500-156	HLR700-500-156	HLB1356-500-156
5/8		HLA7000-625-156	HLR700-625-156	HLB1356-625-156
3/4	3/16	HLA7000-750-187	HLR700-750-187	HLB1356-750-187
7/8	7/32	HLA7000-875-218	HLR700-875-218	HLB1356-875-218
1	1/4	HLA7000-1000-250	HLR700-1000-250	HLB1356-1000-250
1-1/8	5/16	HLA7000-1125-312	HLR700-1125-312	HLB1356-1125-312

ORDERING INFORMATION

1. Determine collar driving hex and pin recess hex dimensions of the fasteners to be installed.
2. See table 1 for "M" socket hex & "G" wrench tip combo to match collar and pin dimensions. Determine complete tool assembly part no.

INSTALLATION TOOLING

HLA7020

Large Straight Heavy Duty Ratchet Wrench Tool Assembly with Extended Socket

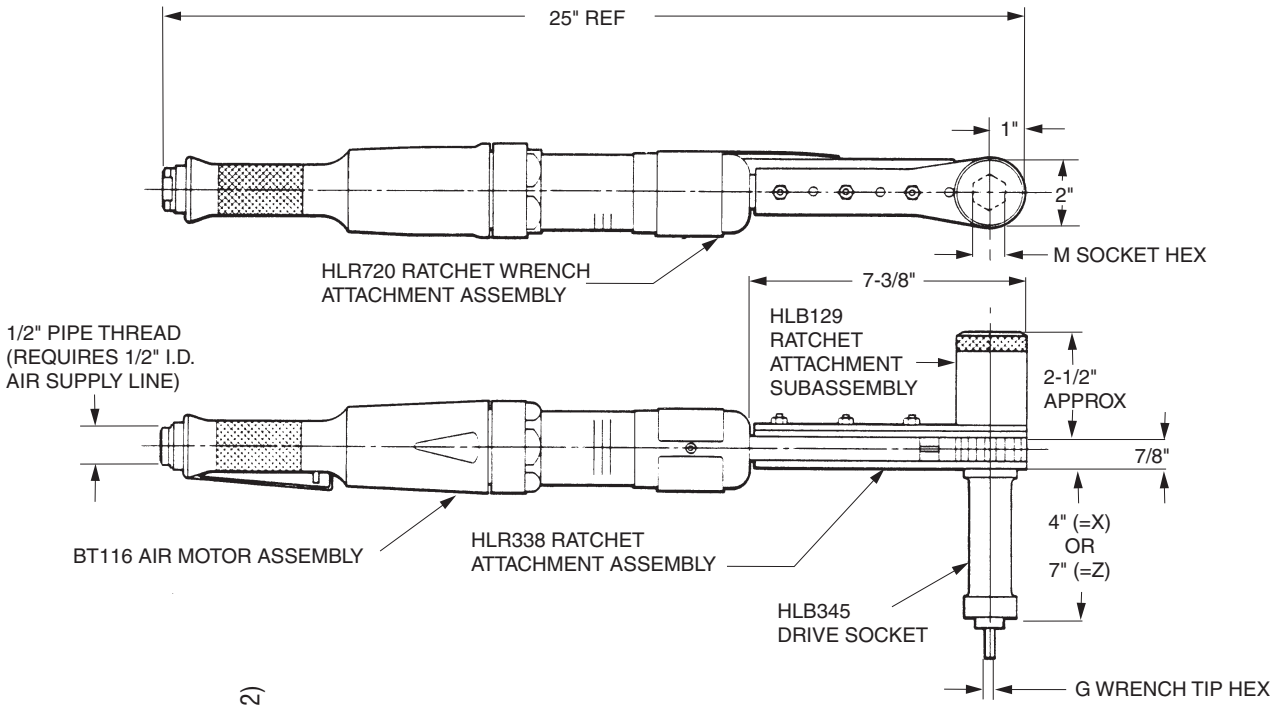

DRIVER BASIC PART NO. — "M" SOCKET HEX REF. TABLE 1 — EXTENDED SOCKET LENGTH (REF TABLE 2) — "G" WRENCH TIP HEX REF. TABLE 1

HLA7020 - 625 (X) - 156

Example: complete driver assy. part no.

ORDERING INFORMATION

1. Determine collar driving hex and pin recess hex dimensions of the fasteners to be installed.
2. See table 1 for "M" socket hex & "G" wrench tip combo to match collar and pin dimensions. Determine complete tool assembly part no.
3. See table 2 for "L" extended socket length

TECHNICAL DATA

Operating Pressure ..... 90 PSIA	Horsepower Rating 2.70
MAX. TORQUE RATING ..... 185 ft. lb (Motor) @90 PSIA	Air Consumption ..... 55 CFM
Socket Speed ..... 75 RPM	Weight ..... 15 lb

TABLE 1

"M" SOCKET DRIVING HEX (Matches Socket Hex)	"G" WRENCH RECESS HEX (Matches Super-Key Hex)	COMPLETE TOOL ASSY. PART NO.	RATCHET WRENCH ATTACHMENT ASSY. PPART NO. (REF.)	EXTENDED SOCKET PART NO.	ATTACHMENT ASSY. PART NO. (REF.)	SOCKET LENGTH inches
1/2	5/32	HLA7020-500X-156	HLR720-500X-156	HLB345-500X	HLB129-500X-156	
5/8		HLA7020-625X-156	HLR720-625X-156	HLB345-625X	HLB129-625X-156	
9/16	3/16	HLA7020-562X-187	HLR720-562X-187	HLB345-562X	HLB129-562X-187	
3/4		HLA7020-750X-187	HLR720-750X-187	HLB345-750X	HLB129-750X-187	4
11/16	7/32	HLA7020-687X-218	HLR720-687X-218	HLB345-687X	HLB129-687X-218	
7/8		HLA7020-875X-218	HLR720-875X-218	HLB345-875X	HLB129-875X-218	
7/8	1/4	HLA7020-875X-250	HLR720-875X-250	HLB345-875X	HLB129-875X-250	
1/2	5/32	HLA7020-500Z-156	HLR720-500Z-156	HLB345-500Z	HLB129-500Z-156	
3/4	3/16	HLA7020-750Z-187	HLR720-750Z-187	HLB345-750Z	HLB129-750Z-187	
7/8	7/32	HLA7020-875Z-218	HLR720-875Z-218	HLB345-875Z	HLB129-875Z-218	
7/8	1/4	HLA7020-875Z-250	HLR720-875Z-250	HLB345-875Z	HLB129-875Z-250	7
1.0		HLA7020-1000Z-250	HLR720-1000Z-250	HLB345-1000Z	HLB129-1000Z-250	
1-1/8	5/16	HLA7020-1125Z-312	HLR720-1125Z-312	HLB345-1125Z	HLB129-1125Z-312	

INSTALLATION TOOLING

HLA1008

Automatic Feed Driver Assembly

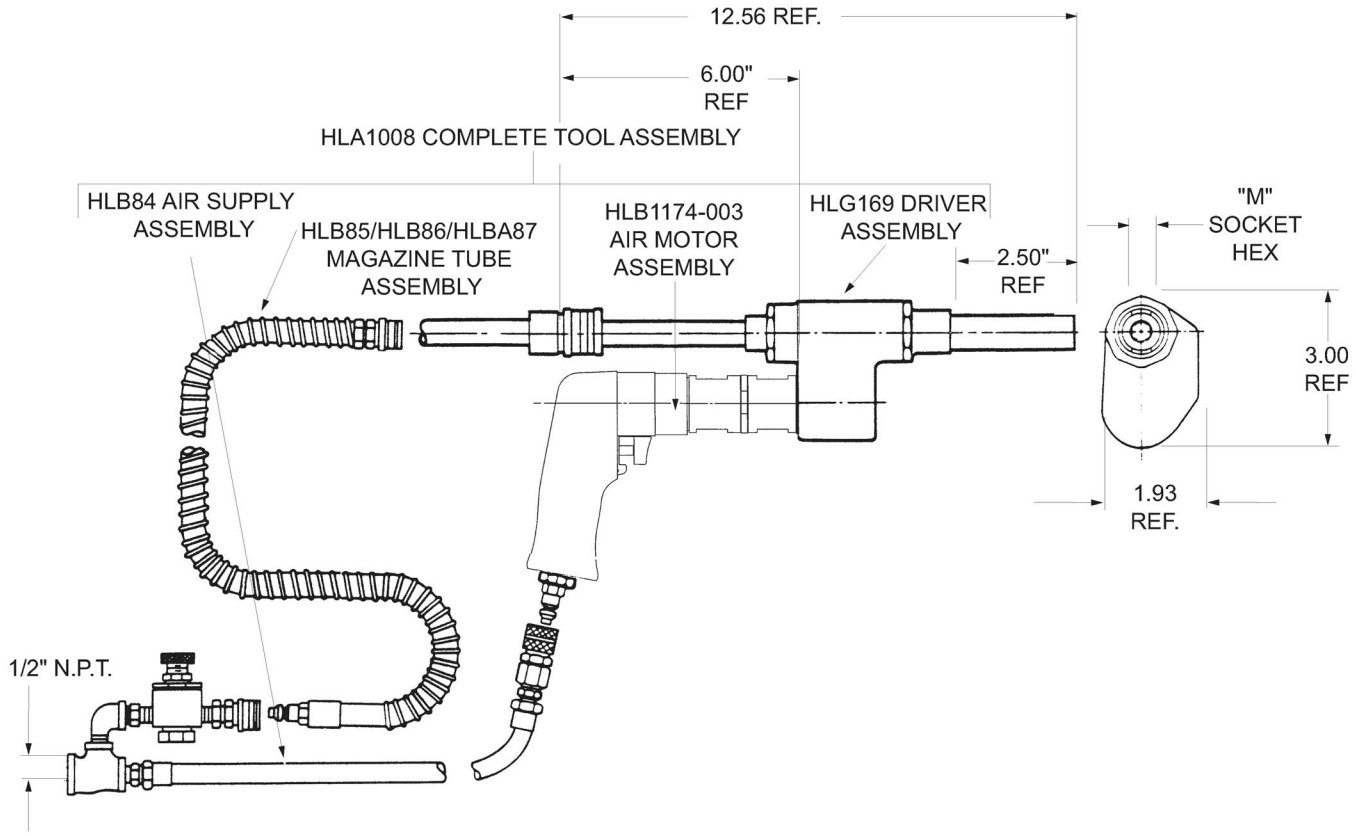

BASIC PART NO. — "M" SOCKET HEX (REF TABLE 1)

HLA1008-312

Example 1: complete tool assy. part no.

ORDERING INFORMATION

1. Determine collar driving hex of the fasteners to be installed.
2. See table 1 for "M" socket hex to match collar driving hex dimensions. Determine complete tool assembly part number.

TECHNICAL DATA

Operating Pressure ..... 90 PSIA	Horsepower Rating 0.75
MAX. TORQUE RATING ..... 270 in. lb (Motor) @90 PSIA	Air Consumption ..... 25 CFM
Socket Speed .....312 RPM	Weight ..... 3 lb

TABLE 1

"M" SOCKET HEX (Matches Collar Driving Hex)	COMPLETE TOOL ASSEMBLY Part No.	RATCHET WRENCH ATTACHMENT ASSY. Part No. (Ref.)
5/16	HLA1008-312	HLG171-312
11/32	HLA1008-343	HLG171-343
7/16	HLA1008-437	HLG171-437

INSTALLATION SYSTEMS FOR AEROSPACE BLIND RIVETS AND LOCKBOLTS

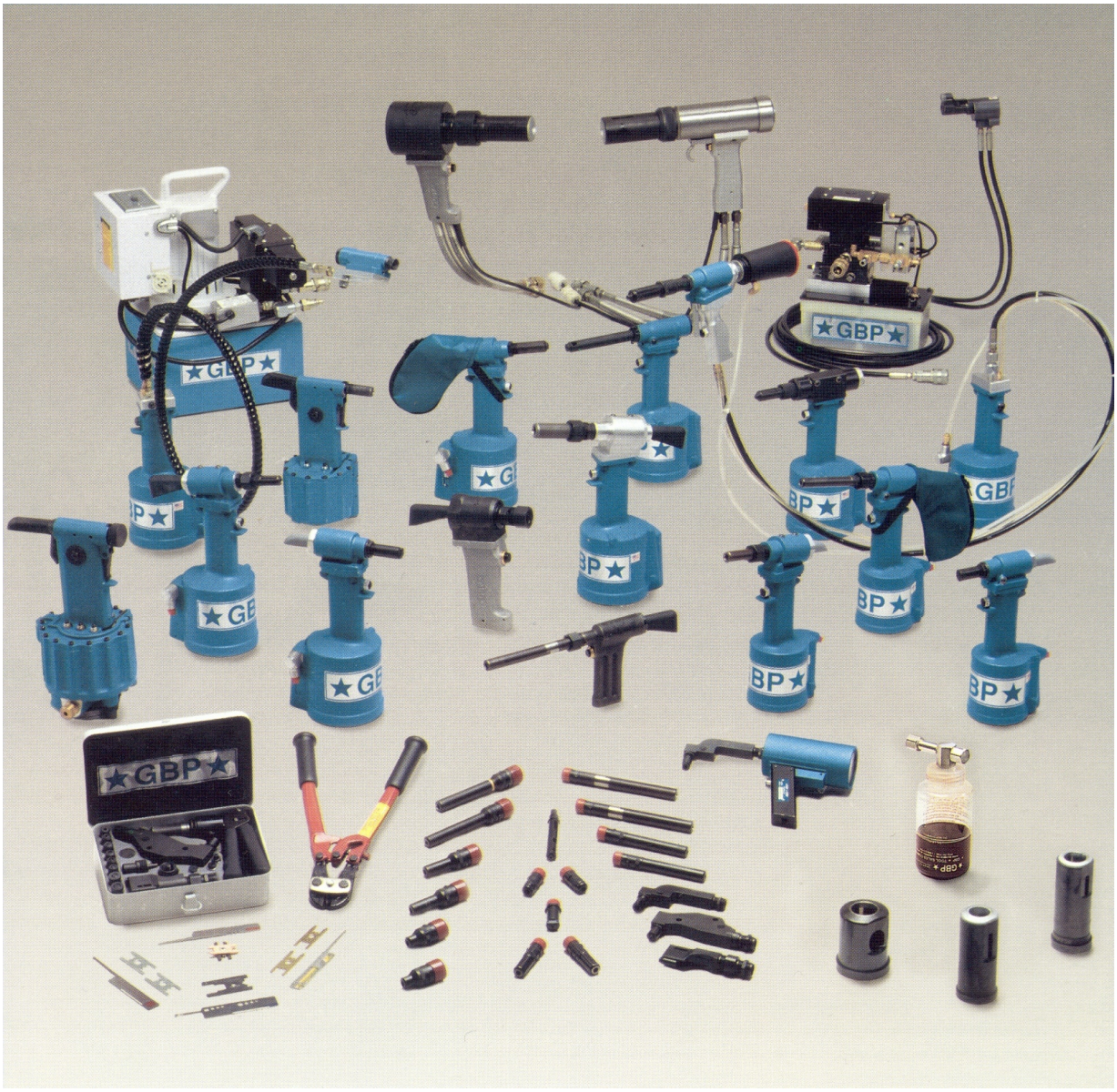

Auf den nachfolgenden Seiten können wir leider nicht alle lieferbaren Werkzeuge für die Verarbeitung von Blindnieten & Lockbolts darstellen.
Weitere Informationen, oder Datenblätter erhalten Sie auf Anfrage.

On the following pages we can not show all available tools for the installation of Blind Fasteners & Lockbolts.
Please contact us if you need more informations or data sheets.

Split-Riveter Split-Handle-Riveter Riveter Kits	Nietwerkzeuge RIVET TOOLING



GBP745B/204



GBP703BSR



GBP734SHV



GBP704RK-1



GBP722TCK



GBP585MFK



GBP713BBK-1



GBP731NASK-1



GBP713BBK-1



GBP745-568NAS-1



GBP731LGPK-1

Weitere Informationen über lieferbare Split-Nietgeräte und Nietgerät-Werkzeugsätze erhalten Sie auf Anfrage

Please contact us if you need more informations of Split-Riveter & Riveter-Kits

Klemmlängen-Lehren / GRIP GAGES



269C3

Empfohlen für / recommend for:

CherryMax® & CherryLock®



GBP 105093

Seite 1 / SIDE 1 (schwarz / black):
- NAS Tension Lockbolts
- MS21140 & MS21141 Blind Fasteners
- MS90353 & MS90354 Blind Fasteners

Seite 2 / SIDE 2 (rot / red):
- NAS Shear, GP®, LGP® Lockbolts
- NAS1919 & NAS1921 Blind Fasteners
- MS20600/MS20601 & MS20604/MS20605 Blind Fasteners
- CHERRYMAX® (M7885) Blindniete / Blind Fasteners
- CHERRYLOCK® (NAS1398/NAS1399 & NAS1738/NAS1739) Blind Fasteners
- NAS1398A/NAS1399A & NAS1738A/NAS1739A 'A' Code Blind Fasteners

Steckschlüssel mit 1/4"-Vierkant-Antrieb für ASP® Blindniete
DRIVER WITH 1/4" SQUARE-DRIVER FOR ASP® FASTENER



Nietdurchmesser RIVET DIAMETER	Artikel Nr. PART NO.
11/64	ASP05
13/64	ASP06
17/64	ASP08
21/64	ASP10

Einstell-/Prüflehre / SHIFT SETTING GAGE



Cherry® **680A159** Gage Bilt **784159**

Empfohlen für / recommend for:

CherryLock® Installation Tool
G784 & GBP784B

Lehrdorne / RIVET HOLE SIZE GAGES "GO/NO-GO"



Empfohlen für / recommend for:
CherryMax® & CherryLock®

CHERRYMAX®			**CHERRYLOCK®**		
Nietdurchmesser RIVET DIAMETER	Artikel Nr. PART NO.	Artikel Nr. PART NO.	Nietdurchmesser RIVET DIAMETER	Artikel Nr. PART NO.	Artikel Nr. PART NO.
	Nominal	**Oversize**		**Standard**	**Bulbed**
3/32" (2,4 mm)	---	---	3/32" (2,4 mm)	T172-3	---
1/8" (3,2 mm)	T172-4	T172-400	1/8" (3,2 mm)	T172-4	T172-400
5/32" (4,0 mm)	T172-5	T172-500	5/32" (4,0 mm)	T172-5	T172-500
3/16" (4,8 mm)	T172-6	T172-600	3/16" (4,8 mm)	T172-6	T172-600
1/4" (6,4 mm)	T172-8	T172-800	1/4" (6,4 mm)	T172-8	---

Entlüfter für pneum./hydr. Nietgeräte
AIR BLEEDER FOR PNEUM./HYDR. RIVETERS



Cherry® **700A77**



Gage Bilt **704153**

Stiftauffangbeutel
STEM CATCHER BAG



Cherry® **670A20**



Gage Bilt **704214**

Cherry Hand-Nietgeräte / **CHERRY HAND-RIVETER**

CherryMAX

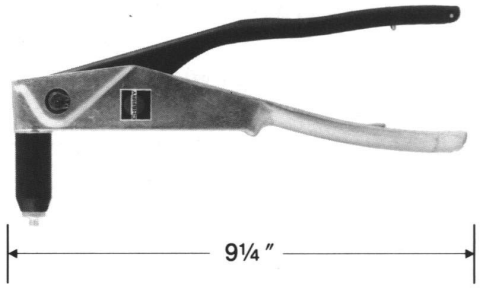

G 27

Gewicht **/ WEIGHT**	13 oz.	(0,37 kg)
max. Nietdurchmesser / **MAX. RIVET DIAMETER**	1/8"	(3,2 mm)
Länge / **LENGTH**	9.25"	(235 mm)

Das Gerät wird mit einem Mundstück **(728A9-4)** für 3,2 mm Niete geliefert.

THE RIVETER COMES EQUIPPED WITH A NOSE PIECE **(728A9-4)** FOR 1/8" RIVETS.

Nutplate Rivets

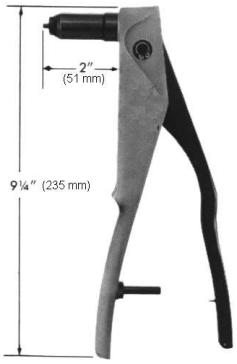

G 29

Gewicht **/ WEIGHT**	13 oz.	(0,37 kg)
max. Nietdurchmesser / **MAX. RIVET DIAMETER**	1/8"	(3,2 mm)
Länge / **LENGTH**	9.25"	(235 mm)

Das Gerät wird mit je einem Mundstück für 2,4 mm **(728A9-3)** und 3,2 mm **(728A9-104)** Niete geliefert.

THE RIVETER COMES WITH 2 NOSE PIECES FOR 3/32" **(728A9-3)** AND 1/8" **(728A9-104)** RIVETS.

CherryLOCK "A"

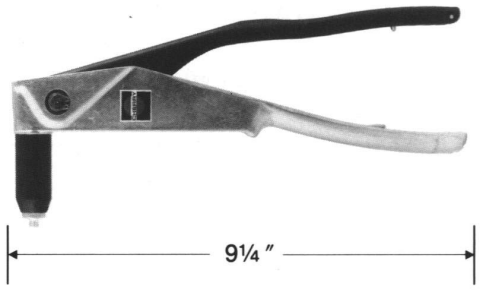

G 30

Gewicht **/ WEIGHT**	13 oz.	(0,37 kg)
max. Nietdurchmesser / **MAX. RIVET DIAMETER**	1/8"	(3,2 mm)
Länge / **LENGTH**	9.25"	(235 mm)

Das Gerät wird mit einem Mundstück für 2,4 mm **(728-33)** Niete geliefert.

THE RIVETER COMES EQUIPPED WITH A NOSE PIECE **(728-33)** FOR 3/32" RIVETS.

Akku-Blindnietgerät
CORDLESS BLIND RIVETER



PT-4500 / PT-4500H

18VDC Li-Ion Battery mit Ladeanzeige / WITH FUEL GAGE

Ladegerät verfügbar in 120V oder 220V / CHARGER AVAILABLE IN 120V OR 220V

Pulling Force:
4496 lbs. (19,99 kN)

Stroke:
.984" (25 mm)

Dimensions:
11.5"H x 12"L x 3.25"W
292.1mm x 304.8mm x 82.55mm

Power Source:
18 VDC, 2.1 Ah, **Li-Ion**

Charger Source:
120 volt, 60 Hz
or 220 volt, 50 Hz

Charger Cycle Time:
40 min. (40 Minuten)

Operating Temp. Range (ambient):
-23°F to 131°F (-5°C to 55°C)

PT-4500

Typical Fasteners Installed with the PT-4500:
- CherryMax & Blind Bolts

PT-4500H

Standardaufnahme für HUCK Zugköpfe der Serie 352
CONFIGURATION FOR HUCK 352 STYLE PULLING HEADS

Typical Fasteners Installed with the PT-4500H:
- NAS & GP Lockbolts
- MS Blind Bolts
- LGLP & MLGP Lockbolts



NAS & GP Lockbolts



MS Blind Bolts



LGLP & MLGP Lockbolts

PT-4500 (optional) Configurations

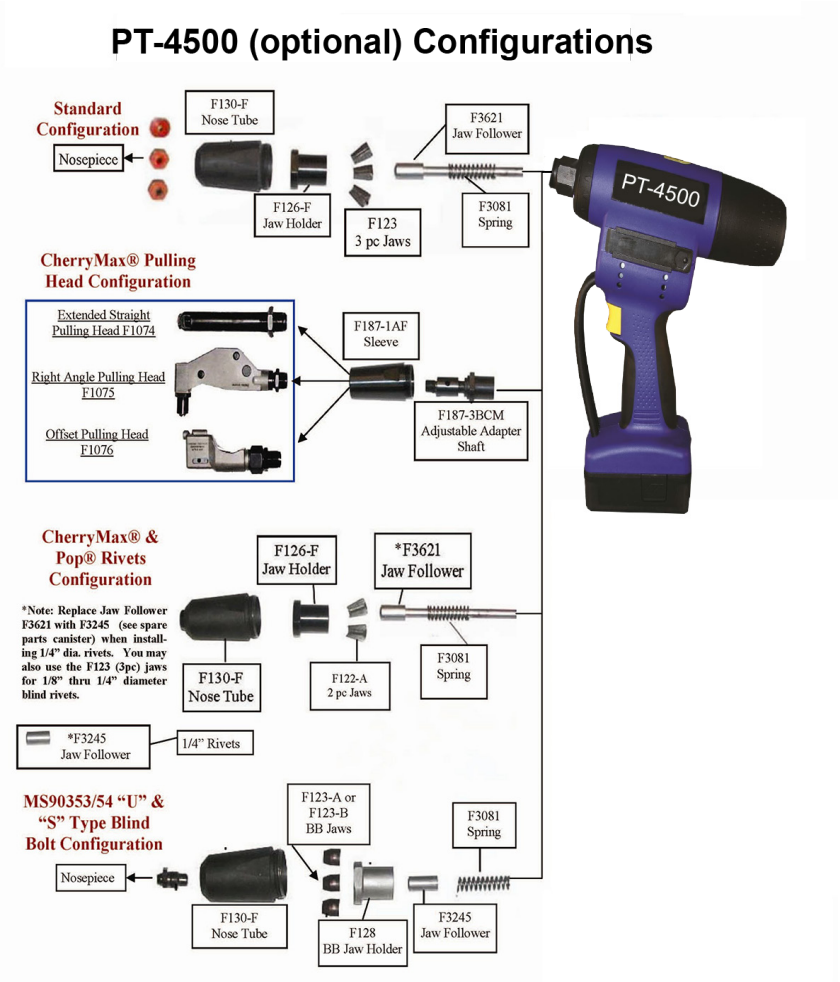

Niettypen / Fasteners

Blind.Rivets
Capacity: max. 1/4"

CherryMax® (M7885)
Avdel® Monobolt
Cherry Monobolts®
Cherry Interlock®
Huck MagnaLok®
and
Pop type rivets

Blind Bolts *
Capacity: max. 3/16"

MS90353S & U
MS90354S & U

* Besondere Zubehörteile, wie Spannbacken, Spanbackengehäuse, Mundstücke, Führungshülsen usw. sind ggf. erforderlich.

* Special Pulling Head parts as jaws, jaw holder, nosepieces or followers are necessary.



PT-4000-MIL-1

Inhalt / Contents

Qty	Part No.	Description
1	PT-4000	Blind Cordless Riveter
1	F-3000	Battery Charger
2	F-3001	12 V Battery Pack
1	F187-1A *	Adapter Sleeve(Flats)
1	F187-2A *	Adapter Puller Shaft
1	F687-1A	Adapter Sleeve, Olympic Lok
1	F687-2A	Adapter Shaft, Olympic Lok
1	F143	Nosepiece, 5/32-3/16 CherryMax
1	F142	Nosepiece, 1/4 CherryMax
1	F169	Nosepiece, 1/4 Monobolt
1	F505-MB	5/32 Maxibolt Nose (Shift Cap)
1	F506-MB	3/16 Maxibolt Nose (Shift Cap)
1	F505 5/32	MS 90353/54-S/U, BB
1	F506 3/16	MS 90353/54-S/U, BB
1	F123-A	Jaw Set, 3 pc, 5/32 Blind Bolt
1	F123-B	Jaw Set, 3 pc, 3/16 Blind Bolt
1	F128	Jaw Holder, Blind Bolts
1	F3245	Jaw Follower, Blind Bolts/CM
1	F3123	Jaw Set, 3 pc, Cherry Max
1	F702	Spare Parts Canister
1	F3602	Metal Carrying Case

***F187-1A and F187-2A sold as an assembly F187**

Note: Replacement jaws for riveter, 2pc - F122-A



PT-4000-MIL-2

Inhalt / Contents

Qty	Part No.	Description
1	PT-4000	Cordless Riveter
1	F-3000	Battery Charger
2	F-3001	12V Battery Pack
1	F187-1AF	Adapter Sleeve (Flats)
1	F187-2BCM	Adapter Shaft Assembly-CherryMax
1	F687-1A	Adapter Sleeve, Olympic Lok
1	F687-2A	Adapter Shaft, Olympic Lok
1	F3123	Jaws (Set) Alum. CherryMax
1	F3245	Jaw Follower, Blind Bolts & 1/4 CM
1	F142	Nosepiece, 1/4" CherryMax/Interlock
1	F169	Nosepiece, 1/4" Monobolt
1	F143	Nosepiece, 5/32-3/16 CherryMax
1	F505	Nosepiece, 5/32 MS90353/54-S/U, B
1	F506	Nosepiece, 3/16 MS 90353/54-S/U, BB
1	F505-MB	Nosepiece, 5/32 Maxibolt
1	F506-MB	Nosepiece, 3/16 Maxibolt
1	F123-A	Jaws Set, 3 pc, 5/32 Blind Bolt
1	F123-B	Jaws Set, 3 pc, 3/16 Blind Bolt
1	F128	Jaw Holder, Blind Bolts
1	F1074	Ex. Straight Hd, CherryMax
1	F1075	Rt. Angle Hd, CherryMax
1	F1076	Offset Hd, CherryMax
1	F702	Spare Parts Canister
1	F3602	Metal Carrying Case

NOTE: Replacement jaws for riveter, 2pc - F122-A (5120-01-430-5378).

Commercial & Aerospace Blind Rivets & Blind Nuts

Blindnietgeräte Satz BLIND RIVETER KIT



The **D-9000-MIL-1 Kit** contains the pull-up studs and driving anvils used in conjunction with the hand hydraulic D-700-VM combination riveter/nutsetter, which allows installation of blind nuts (NAS1329/30 MS27130/31) and AVK, TSN® and Nutsert® style inserts. The D-700-VM provides 4,800lbs of pulling force and because of its unique two-stage valve system, wrist effort is reduced as the pull force increases. The D-700-VM VariMax® feature also allows the pull force to be adjusted when installing Rivnuts®. This minimizes the chance of thread failure from excessive pull force or improper installation due to inadequate upset loads.

A blind nut stroke gage and blind rivet grip gage are also included to help insure proper fastener selection and installation. The kit is housed in a weather tight metal
box and comes with a built in fastener and tooling selection chart permanently affixed to the inside lid. Operating instructions are provided in both a written manual and CD-ROM format to help insure proper care and use.

For Rivet Type:

- Cherry MS, Olympic MS MS20600-20605
- Huck SMLS NAS 1919 S/U NAS 1921
- Blind Bolt, Maxibolt MS 90353 S/U MS 90354 S/U
- Cherrylock "A"
- Code Olympic-Lok NAS 1398/1399 Single Action
- Monobolt IFI-134
- Magnabulb / Hemlock
- Olympic Bulb-Tite
- Automotive Split Rivet
- POP Rivets MIL-R-24243
- AVEX Multi-Grip
- MagnaLok, Interlock, Mega-Grip M7885/10 IFI-134
- Nutserts
- Thin Sheet Nutserts
- AVK Inserts
- Rivnuts/Plusnuts NAS 1329/1330, MS 27130/27131

D-9000-MIL-1

Inhalt / Contents:

QTY	PART NO.	DESCRIPTION
1 EA	**D-700C**	**HAND HYDRAULIC RIVETER,** PRESSURE VALVE
1 EA	**PT-100M**	**AIR HYDRAULIC RIVETER**
1 EA	**PT-4000**	**CORDLESS RIVETER**
1 EA	**D-28**	**HAND RIVETER**
1 EA	F-4000A	BATTERY CHARGER, SMART
2 EA	F-3001A	BATTERY PACK, Ni-MH (12v, 3.2AH)
1 EA	F156	3/32-1/8 NOSEPIECE
1 EA	F159	1/8 NOSEPIECE
4 EA	F143	1/8-3/16 NOSEPIECE
1 EA	F142	1/4 NOSEPIECE
1 EA	F168	3/16 MONOBOLT NOSEPIECE
1 EA	F169	1/4 MONOBOLT NOSEPIECE
1 EA	F580	3/16 MS NOSEPIECE
1 EA	F396	3/16 BULBTITE NOSEPIECE
1 EA	F398	1/4 BULBTITE NOSEPIECE
1 EA	F155	1/4 "T" RIVET NOSEPIECE
1 EA	F390	3/32 NAS 1400A NOSEPIECE
1 EA	F391	1/8 NAS 1400A NOSEPIECE
1 EA	F392	5/32 NAS 1400A NOSEPIECE
1 EA	F393	3/16 NAS 1400A NOSEPIECE
1 EA	F501	1/8 NAS 1900S NOSEPIECE
1 EA	F502	5/32 NAS 1900S NOSEPIECE
1 EA	F503	3/16 NAS 1900S NOSEPIECE
1 EA	F505U	5/32 MS90353/54-S/U NOSEPIECE
1 EA	F506	3/16 MS90353/54-S/U NOSEPIECE
1 EA	F360	6-32 PULL-UP STUD
1 EA	F367	NO. 6 ANVIL
1 EA	F361	8-32 PULL-UP STUD
1 EA	F364	NO. 8 ANVIL
1 EA	F372	10-24 PULL-UP STUD
1 EA	F176	NO. 10 TSN ANVIL
1 EA	F362	10-32 PULL-UP STUD
1 EA	F365	NO. 10 ANVIL
1 EA	F373	1/4-20 PULL-UP STUD
1 EA	F177	NO. 1/4 TSN ANVIL
1 EA	F363	1/4-28 PULL-UP STUD
1 EA	F366	NO. 1/4 ANVIL

QTY	PART NO.	DESCRIPTION
1 EA	F374	5/16-18 PULL-UP STUD
2 EA	F378	NO. 5/16 ANVIL
1 EA	F377	5/16-24 PULL-UP STUD
1 EA	F375	3/8-16 PULL-UP STUD
1 EA	F379	3/8 ANVIL
1 EA	F384	5 MM PULL-UP STUD
1 EA	F365M	5 MM ANVIL
1 EA	F380	6 MM PULL-UP STUD
1 EA	F366M	6 MM ANVIL
1 EA	F386	8 MM PULL-UP STUD
1 EA	F378M	8 MM ANVIL
1 EA	F387	10 MM PULL-UP STUD
1 EA	F379M	10 MM ANVIL
1 EA	F170-A	MASTERSHAFT
1 EA	F171	TURN NUT
1 EA	F187-3BCM	ADAPTER SHAFT, COMPENSATING
1 EA	F187-3ACM	ADAPTER SHAFT, THROUGH HOLE
1 EA	F187-1AR	ADAPTER SLEEVE, ROTATING
1 EA	F687-1AF	ADAPTER SLEEVE, FLATS
1 EA	F687-2A	ADAPTER SHAFT, MS STYLE
3 EA	F702	SPARE PARTS CANISTER
6 EA	F122-A	2 PIECE CAST JAW SET
3 EA	F123	3 PIECE CAST JAW SET
1 EA	F123-A	3 PIECE JAW SET/ BB 5/32
1 EA	F123-B	3 PIECE JAW SET/ BB 3/16
1 EA	F128	JAW HOLDER, BLIND BOLTS
1 EA	F758	JAW PUSHER BB, D-700
1 EA	F958	JAW PUSHER. PT-100
1 EA	F990	JAW PUSHER SPRING, PT-100
1 EA	F3245	1/4 JAW FOLLOWER
1 EA	F3081-A	JAW PUSHER SPRING
1 EA	F101	RIVET NUT STROKE GAGE
1 EA	F269C3	RIVET GRIP GAGE
1 EA	F609A	METAL WEATHER TIGHT CASE
1 EA	F701-D9	CD-ROM, USER MANUAL
1 EA	F755-D9000	LAMINATED TOOL ASSY CARDS

Commercial & Aerospace Blind Rivets & Blind Nuts

Blindnietgeräte Satz
BLIND RIVETER KIT



D-9000-MIL-2

The **D-9000-MIL-2 Kit** contains the pull-up studs and driving anvils used in conjunction with the hand hydraulic D-700-VM combination riveter/nutsetter, which allows installation of blind nuts (NAS1329/30 MS27130/31) and AVK, TSN® and Nutsert® style inserts. The D-700-VM provides 5,000lbs of pulling force and because of ist unique two-stage valve system, wrist effort is reduced as the pull force increases. The D-700-VM VariMax® feature also allows the pull force to be adjusted when installing Rivnuts®. This minimizes the chance of thread failure from excessive pull force or improper installation due to inadequate upset loads.

A blind nut stroke gage and blind rivet grip gage are also included to help insure proper fastener selection and installation. The kit is housed in a weather tight metal box and comes with a built in fastener and tooling selection chart permanently affixed to the inside lid. Operating instructions are provided in both a written manual and CD-ROM format to help insure proper care and use. This kit has been approved for use in the U.S. Army's Standard Automotive Tool Set ("SATS") and is currently being used by all U.S. Military service branches

For Rivet Type:

- CherryMax, Huck Clinch, Allmax M7885/NAS 9300
- Cherry MS, Olympic MS MS20600-20605
- Huck SMLS NAS 1919 S/U NAS 1921
- Blind Bolt, Maxibolt MS 90353 S/U MS 90354 S/U
- Cherrylock "A" Code Olympic-Lok NAS 1398/1399 Single Action
- Monobolt IFI-134
- Magnabulb / Hemlock
- Olympic Bulb-Tite
- Automotive Split Rivet
- POP Rivets MIL-R-24243
- AVEX Multi-Grip
- MagnaLok, Interlock, Mega-Grip M7885/10 IFI-134
- Nutserts
- Thin Sheet Nutserts
- AVK Inserts
- Rivnuts/Plusnuts NAS 1329/1330, MS 27130/27131

Inhalt / Contents:

QTY	PART NO.	DESCRIPTION
1 EA	**D-700C**	**HAND HYDRAULIC RIVETER**, PRESSURE VALVE
1 EA	**PT-100M**	**AIR HYDRAULIC RIVETER**
1 EA	**PT-4000**	**CORDLESS RIVETER**
1 EA	**D-28**	**HAND RIVETER**
1 EA	F-4000A	BATTERY CHARGER, SMART
2 EA	F-3001A	BATTERY PACK, Ni-MH (12v, 3.2AH)
1 EA	F156	3/32-1/8 NOSEPIECE
1 EA	F159	1/8 NOSEPIECE
4 EA	F143	1/8-3/16 NOSEPIECE
1 EA	F142	1/4 NOSEPIECE
1 EA	F168	3/16 MONOBOLT NOSEPIECE
1 EA	F169	1/4 MONOBOLT NOSEPIECE
1 EA	F580	3/16 MS NOSEPIECE
1 EA	F396	3/16 BULBTITE NOSEPIECE
1 EA	F398	1/4 BULBTITE NOSEPIECE
1 EA	F155	1/4 "T" RIVET NOSEPIECE
1 EA	F390	3/32 NAS 1400A NOSEPIECE
1 EA	F391	1/8 NAS 1400A NOSEPIECE
1 EA	F392	5/32 NAS 1400A NOSEPIECE
1 EA	F393	3/16 NAS 1400A NOSEPIECE
1 EA	F501	1/8 NAS 1900S NOSEPIECE
1 EA	F502	5/32 NAS 1900S NOSEPIECE
1 EA	F503	3/16 NAS 1900S NOSEPIECE
1 EA	F505U	5/32 MS90353/54-S/U NOSEPIECE
1 EA	F506	3/16 MS90353/54-S/U NOSEPIECE
1 EA	F360	6-32 PULL-UP STUD
1 EA	F367	NO. 6 ANVIL
1 EA	F361	8-32 PULL-UP STUD
1 EA	F364	NO. 8 ANVIL
1 EA	F372	10-24 PULL-UP STUD
1 EA	F176	NO. 10 TSN ANVIL
1 EA	F362	10-32 PULL-UP STUD
1 EA	F365	NO. 10 ANVIL
1 EA	F373	1/4-20 PULL-UP STUD
1 EA	F177	NO. 1/4 TSN ANVIL
1 EA	F363	1/4-28 PULL-UP STUD
1 EA	F366	NO. 1/4 ANVIL

QTY	PART NO.	DESCRIPTION
2 EA	F378	NO. 5/16 ANVIL
1 EA	F377	5/16-24 PULL-UP STUD
1 EA	F375	3/8-16 PULL-UP STUD
1 EA	F379	3/8 ANVIL
1 EA	F384	5 MM PULL-UP STUD
1 EA	F365M	5 MM ANVIL
1 EA	F380	6 MM PULL-UP STUD
1 EA	F366M	6 MM ANVIL
1 EA	F386	8 MM PULL-UP STUD
1 EA	F378M	8 MM ANVIL
1 EA	F387	10 MM PULL-UP STUD
1 EA	F379M	10 MM ANVIL
1 EA	F170-A	MASTERSHAFT
1 EA	F171	TURN NUT
1 EA	F187-3BCM	ADAPTER SHAFT, COMPENSATING
1 EA	F187-3ACM	ADAPTER SHAFT, THROUGH HOLE
1 EA	F187-1AR	ADAPTER SLEEVE, ROTATING
1 EA	F687-1AF	ADAPTER SLEEVE, FLATS
1 EA	F687-2A	ADAPTER SHAFT, MS STYLE
1 EA	**F1074**	**EXT STR PULLING HD**
1 EA	**F1075**	**RIGHT ANGLE PULLING HD**
1 EA	**F1076**	**OFFSET PULLING HD**
3 EA	F702	SPARE PARTS CANISTER
6 EA	F122-A	2 PIECE CAST JAW SET
3 EA	F123	3 PIECE CAST JAW SET
1 EA	F123-A	3 PIECE JAW SET/ BB 5/32
1 EA	F123-B	3 PIECE JAW SET/ BB 3/16
1 EA	F128	JAW HOLDER, BLIND BOLTS
1 EA	F758	JAW PUSHER BB, D-700
1 EA	F958	JAW PUSHER. PT-100
1 EA	F990	JAW PUSHER SPRING, PT-100
1 EA	F3245	1/4 JAW FOLLOWER
1 EA	F3081-A	JAW PUSHER SPRING
1 EA	F101	RIVET NUT STROKE GAGE
1 EA	F269C3	RIVET GRIP GAGE
1 EA	F609A	METAL WEATHER TIGHT CASE
1 EA	F701-D9	CD-ROM, USER MANUAL

Cherry - Hydraulisches Hand-Nietgerät
CHERRY - HYDRAULIC HAND-RIVETER



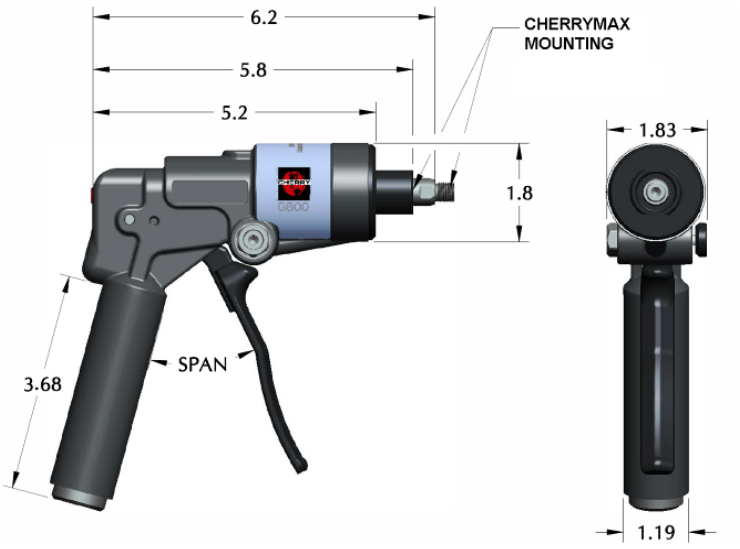

G800

Max. Zugkraft (einstellbar) **/ MAX. PULLING FORCE (adjustable)**	Bis zu / Up to **6000 lbs.**
max. Nietdurchmesser / **MAX. RIVET DIAMETER**	**1/4"** (6,4 mm)
Abmessungen Gerät (ohne Zugkopf) / **RIVETER DIMENSIONS (without Pulling Head)**	siehe oben / see above
Abmessungen Zugkopf) / **DIMENSIONS (without Pulling Head)**	siehe unten / see below
Gewicht (ohne Zugkopf) **/ WEIGHT (without Pulling Head)**	1.7 lbs (0,77 kg)

Das Gerät **G800** wird mit einem geradem Zugkopf **H800** geliefert.
THE RIVETER **G800** COMES EQUIPPED WITH A STRAIGHT PULLING HEAD **H800**

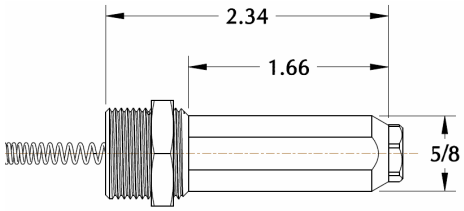

Zugkopf / PULLING HEAD **H800**

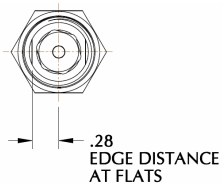

Der Zugkopf H800 wird empfohlen für die Verarbeitung folgender Blindniete:
THE PULLING HEAD H800 IS RECOMMEND FOR THE INSTALLATION OF FOLLOWING BLIND-RIVETS:

CherryMAX & CherryMAX AB	-4, -5, -6 (außer/except -6 Aluminium)
Blindbolt "S" type (with Shifting Anvil)	-04 & -05
MBC Lock Creator	-4, -5, -6
NAS1900 "U" type (with Shifting Anvil)	-4 & -5

Optional sind auch Winkel & Offset-Zugköpfe lieferbar, sowie Zugköpfe für andere Blindniet-Typen

OPTIONAL ARE AVAILABLE RIGHT ANGLE & OFFSET PULLING HEADS
AND ALSO PULLING HEADS FOR OTHER RIVET TYPES.

Cherry - Hydr. Hand-Nietgerät mit Zubehör im Koffer
CHERRY - HYDR. HAND RIVETER KIT



G800-CMR

Lieferumfang / CONTENS:

Beschreibung / DESCRIPTION:	Artikel-Nr. / PART NO.
1 Aufbewahrungskasten / CASE	P1485
1 Nietgerät / RIVETER (mit Zugkopf H800 / WITH PULLING HEAD H800)	G800
1 Offset Zugkopf / OFFSET PULLING HEAD	H782
1 Winkel-Zugkopf / RIGHT ANGLE PULLING HEAD	H753A-456
1 Mundstück / NOSE TIP	782-5BB
1 Mundstück / NOSE TIP	886-003
1 Klemmlängen-Lehre / GRIP GAUGE	269C3
1 Klemmlängen-Lehre / GRIP GAUGE	269B12

Dokumentation / Manuals& Tool Sheets

1 Pocket Card, MaxiBolt
1 Pocket Card, CherryMax
1 Cherry Process Manual
1 Manual G800
1 Manual H782
1 Manual H53A-456

G800-CMR wird für die Verarbeitung folgender Niettypen empfohlen:
G800-CMR IS RECOMMEND FOR THE INSTALLATION OF FOLLOWING RIVET TYPES:

CherryMAX & CherryMAX AB	-4, -5, -6 (außer/except -6 Aluminium)
Blindbolt "S" type (with Shifting Anvil)	-04 & -05
Blindbolt "U" type (mit Mundstück / with Nose Tip 782-5BB)	-05
MBC Lock Creator	-4, -5, -6
NAS1900 "U" type (with Shifting Anvil)	-4 & -5
CherryLOCK "A" Code (mit Mundstück / with Nose Tip 886-003)	-6

Cherry Zugköpfe empfohlen für Hand-Nietgerät G800

CHERRY PULLING HEADS FOR HAND RIVETER G800

MODEL NUMBER	JAW P/N	JAW FOLLOWER	NOSE PIECE	INSTALLS THE FOLLOWING PRODUCTS
 H800	*701B18	*753A14A	*782-456	CherryMAX, CherryMAX AB: -4, -5, -6 (except 6 Alum) Blindbolt "S" type: -04 & -05 MBC Lock Creator: -4, -5, -6 NAS1900 "U" type: -4 & -5
			886-003	CherryLOCK "A" Code: -3
			886-004	CherryLOCK "A" Code: -4
			886-005	CherryLOCK "A" Code: -5
 **RIGHT ANGLE: H753A-456** INSTALLS NAS1400 & 1722 RIVETS UP TO -04 GRIP	782-010	886-002	886-006	CherryLOCK "A" Code: -6
	*701B18	*753A14A	782-5BB	Blindbolt "U" Type: -05
			782-4MBC	Standard MBC: -4
			782-5MBC	Standard MBC: -5
	782-010	886-002	782-6MBC	Standard MBC: -6
			782 -6AL	CherryMAX "AB" -6 Alum, NAS1900 -4, -5, -6
	*701B18	*753A14A	782-3	3/32" SPR & -3 pull thru NP Rivets
			782-4NAS	NAS1900, -4 (no shift washer)
			782-5NAS	NAS1900, -5 (no shift washer)
	782-010	886-002	782-6NAS	NAS1900, -6 (no shift washer)

MODEL NUMBER	JAW P/N	NOSE PIECE	INSTALLS THE FOLLOWING PRODUCTS
 **Offset: H782**	*701B18	*782-456	CherryMAX & CherryMAX AB: -4, -5 & -6 (except -6 Alum) Blindbolt "S" type: -04 & -05 MBC Lock Creator: -4, -5, -6 NAS1900 "U" type: -4 & -5
		886-003	CherryLOCK "A" Code: -3
		886-004	CherryLOCK "A" Code: -4
		886-005	CherryLOCK "A" Code: -5
	782-010	886-006	CherryLOCK "A" Code: -6
	*701B18	782-5BB	Blindbolt "U" Type: -05
		782-4MBC	Standard MBC: -4
		782-5MBC	Standard MBC: -5
	782-010	782-6MBC	Standard MBC: -6
		782 -6AL	CherryMAX "AB" -6 Al; NAS1900 -4, -5 & -6
	*701B18	782-3	3/32" SPR & -3 pull thru NP Rivets
		782-4NAS	NAS1900, -4 (no shift washer)
		782-5NAS	NAS1900, -5 (no shift washer)
	782-010	782-6NAS	NAS1900, -6 (no shift washer)

MODEL NUMBER	JAW P/N	NOSE PIECE P/N	INSTALLS THE FOLLOWING PRODUCTS
 **HEAVY DUTY: HD800-8**	*652-043	*652-024	CherryMax, "A" Code, "AB" -8 (all materials)
		652-065	Maxibolt Plus -5, 6, 8
	865C25	652-035	Maxibolt -8 "S" type
		652-065	Maxibolt -8 "U" type
	744C76	652-038	Maxibolt -6 "S" type
		652-067	Maxibolt -6 "U" type

Bemerkung: Positionen mit einem Stern **(*)** sind Standard-Zubehör und gehören zum Lieferumfang des Zugkopfes.

Notes: Items marked with an asteriks **(*)** are standard components provided with the pulling heads.

CHERRYMAX

CherryLock A
CherryMax A
Intermax
Nutplate Rivets
MS

Nietwerkzeuge
RIVET TOOLING

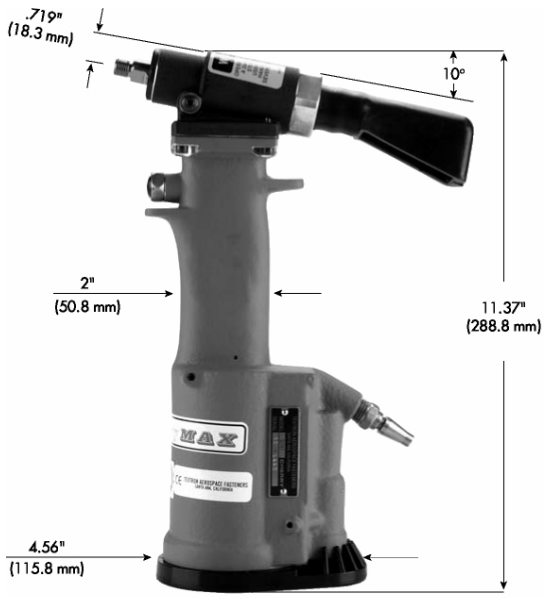

G 747

AIR PRESSURE 90 PSI (6.2 bar) Min. / 110 PSI (7.6 bar) Max.

STROKE **0.437 inch (11.1 mm)**

PULLING FORCE **2100 Pounds (9.34 kN)** @ 90 PSI (6.2 bar)

CYCLE TIME Approximately One Second

WEIGHT 3.5 Pounds (1.59 kg)

NOISE LEVEL 71 dB (A)

VIBRATION less than 2.5 m/s2

AIR CONSUMPTION 0.09 SCF/cycle (2.55 L/cycle)

Zugköpfe gehören nicht zum Lieferumfang.
Bitte extra bestellen !

NOSE ASSEMBLIES ARE NOT FURNISHED WITH THE RIVETER AND MUST BE ORDERED SEPARATELY !

G747 Zugköpfe / PULLING HEADS

Pulling Head	Type	Adapter	Rivet	Rivet Diameters	Maximum Grip [1]
H701 B-456	Straight	-	CherryMAX® Bulb	1/8, 5/32, 3/16 [2 3]	All
			CherryMAX® "A"	1/8, 5/32, 3/16 [3]	-3 [1]
			InterMAX	1/8, 5/32, 3/16	-3 [1]
H747-3NPR	Straight	-	Nut-plate	3/32	All
H753A-456	Right Angle	-	CherryMAX® Bulb	1/8, 5/32, 3/16 [2 3]	All
			CherryMAX® "A"	1/8, 5/32, 3/16 [3]	-3 [1]
			InterMAX	1/8, 5/32, 3/16	-3 [1]
H781-456	Offset	-	CherryMAX® Bulb	1/8, 5/32, 3/16 [2 3]	All
			CherryMAX® "A"	1/8, 5/32, 3/16 [3]	-3 [1]
			InterMAX	1/8, 5/32, 3/16	-3 [1]
H9015-3C	Straight	704A9	MS [4]	3/32	All
H9015-4C				1/8	All
H9015-5C				5/32	All
H9015-6C				3/16	All
H955-3	Straight	-	CherryLock® "A"	3/32	-3 [1]
H955-4				1/8	-3 [1]
H955-5				5/32	-3 [1]
H955-6				3/16	-3 [1]

[1] Nach dem erstem Hub / **On the first stroke.**

[2] Nominal und Übergröße / **Nominal and oversize.**

[3] Kein 3/16" Aluminium, nur legierter Stahl und Monel / **No 3/16" Aluminum, Alloy steel and Monel only.**

[4] Nur geriffelte Stifte / **Serrated stems only.**

CHERRYMAX

CherryLock A
CherryMax A
Intermax
MS

Nietwerkzeuge
RIVET TOOLING

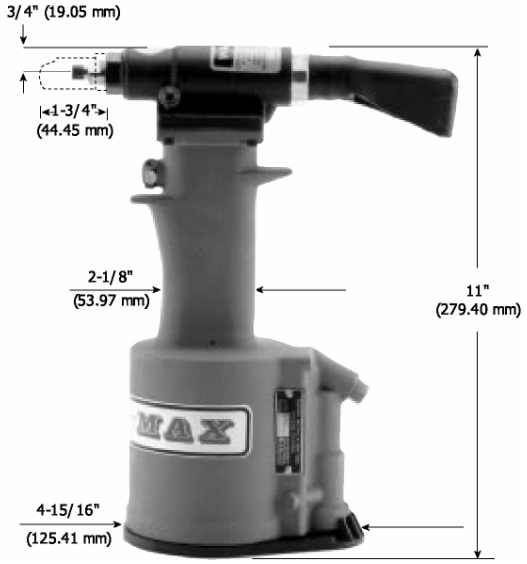

AIR PRESSURE 90 PSI (6.2 bar) Min. / 110 PSI (7.6 bar) Max.

STROKE **.875 inch (22.23 mm)**

PULLING FORCE **1850 Pounds (8.23 kN)** @ 90 PSI (6.2 bar)

CYCLE TIME Approximately one second

WEIGHT 4 1/4 Pounds (1.93 kg)

NOISE LEVEL 72 dB (A)

VIBRATION <2.5 m/s2

AIR CONSUMPTION 3.9 CFM (110.5 liters/M) at 20 Cycles per Minute

Zugköpfe gehören nicht zum Lieferumfang.
Bitte extra bestellen !

NOSE ASSEMBLIES ARE NOT FURNISHED WITH THE RIVETER AND MUST BE ORDERED SEPARATELY !

G 746A

G746A Zugköpfe / PULLING HEADS

Pulling Head	Type	Adapter	Rivet	Rivet Diameters	Maximum Grip [1]
H701 B-456	Straight	-	CherryMAX® Bulb CherryMAX® "A" InterMAX	1/8, 5/32, 3/16 [2 3] 1/8, 5/32, 3/16 [3] 1/8, 5/32, 3/16	All -9 [1] -9 [1]
H753A-456	Right Angle	-	CherryMAX® Bulb CherryMAX® "A" InterMAX	1/8, 5/32, 3/16 [2 3] 1/8, 5/32, 3/16 [3] 1/8, 5/32, 3/16	All -4 [1] -4 [1]
H781-456	Offset	-	CherryMAX® Bulb CherryMAX® "A" InterMAX	1/8, 5/32, 3/16 [2 3] 1/8, 5/32, 3/16 [3] 1/8, 5/32, 3/16	All -4 [1] -4 [1]
H9015-3C **H9015-4C** **H9015-5C** **H9015-6C**	Straight	704A9	MS [4]	3/32 1/8 5/32 3/16	All All All All
H955-3 **H955-4** **H955-5** **H955-6**	Straight	-	CherryLock® "A"	3/32 1/8 5/32 3/16	-9 [1] -9 [1] -9 [1] -9 [1]

[1] Nach dem erstem Hub / **On the first stroke.**

[2] Nominal und Übergröße / **Nominal and oversize.**

[3] Kein 3/16" Aluminium, nur legierter Stahl und Monel / **No 3/16" Aluminum, Alloy steel and Monel only.**

[4] Nur geriffelte Stifte / **Serrated stems only.**



GB704

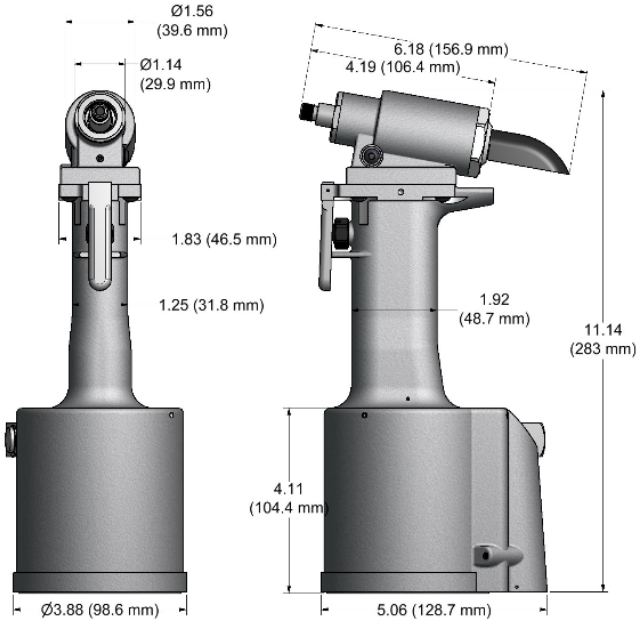

Pneudraulisches Nietgerät
PNEUDRAULIC RIVETER

SPEZIFIKATIONEN / SPECIFICATIONS

Gewicht	Weight	4.30 lbs. (1.95 kg)
Hub	Setting stroke	**.540" (13.7 mm)**
Leistung	Rated Pull load	**3300 lbs. @ 90 psi (14,68 kN @ 6,2 bar)**

GB704 - SELECTION CHART

FASTENER	DIA	STRAIGHT	RIGHT ANGLE 3	OFFSET
CHERRYMAX® CHERRYMAX 'AB' NAS1919U NAS1921U MIL-R-7885 NAS9301-9312 BACR15FR/FP BACR15GF/GK	1/8 5/32 3/16	456MAX-701-17 2 456MAX-704-35 2 456MAX-749-35 4,2	456MAX-753A-54 2	456MAX-704-43OS 2
NUT PLATE RIVETS MS20600 SERIES CCR244/264/274 MS/9SP/PT BACR15CC/CF/DA/DR	3/32 1/8 5/32 3/16	3C-704A-16 4C-704A-16 5C-704A-16 6C-704A-16	3C-704-54RA 4C-704-54RA 5C-704-54RA 6C-704-54RA	3C-704-40OS 4C-704-40OS 5C-704-40OS 6C-704-40OS
'A' CODE NAS1398A NAS1399A	3/32 1/8 5/32 3/16	3A-704A-16 4A-704A-16 5A-704A-16 6A-704A-16	3A-704-54RA 4A-704-54RA 5A-704-54RA 6A-704-54RA	3A-704-40OS 4A-704-40OS 5A-704-40OS 6A-704-40OS
GROUND STUD M83454 BACS53B1EA1/2	8/32	GS8-704-56	GS8-704-54RA	GS8-715-40OS 1

1) 715 SERIES NOSE ASSEMBLIES REQUIRE 704001 ADAPTER.	NOTE: THE LAST 2 DIGITS OF THE NOSE ASSEMBLY REPRESENTS THE LENGTH THE NOSE EXTENDS FROM THE TOOL I.E. -20 = 2.0 INCHES
2) INSTALLS 1/8", 5/32", AND 3/16" DIAMETERS	
3) RIGHT ANGLE NOSE ASSEMBLIES MAY REQUIRE MORE THAN ONE PULL	
4) FRONT END EJECTING NOSE ASSEMBLY.	



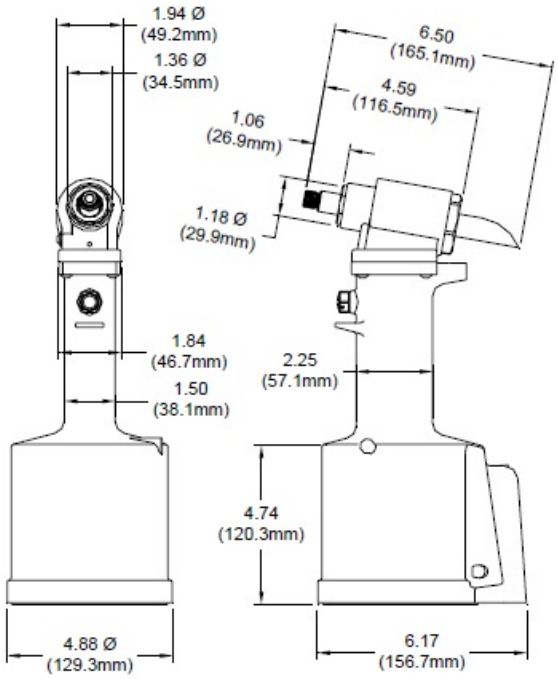

GB744

Pneudraulisches Nietgerät
PNEUDRAULIC RIVETER

SPEZIFIKATIONEN / SPECIFICATIONS

Gewicht	Weight	7.00 lbs. (3,17 kg)
Hub	Setting stroke	**.580" (14,7 mm)**
Leistung	Rated Pull load	**3800 lbs @ 90 psi (16,91 kN @ 6,2 bar)**

GB744 - SELECTION CHART

FASTENER	DIA	STRAIGHT	RIGHT ANGLE 2,1	OFFSET 1
CHERRYMAX®	1/8	456MAX-701-17 1,2	456MAX-753A-54 1,2	456MAX-704-43OS 1,2
ALLMAX®	5/32	456MAX-744-20 1		456MAX-744-50OS 1
HUCKMAX®	3/16	456MAX-749-35 1,2,3		
HUCK-CLINCH® MIL-R-7885 NAS9301-9312 BACR15FR/FR BACR15GJ/GK	1/4	08MAX-744-20		08MAX-744-50OS

1) ALL THREE DIAMETERS CAN BE INSTALLED WITH ONE NOSE ASSEMBLY.

2) NOSE ASSEMBLIES REQUIRE THE 744704 ADAPTER.

3) FRONT END EJECTING NOSE ASSEMBLY.

4) RIGHT ANGLE NOSE ASSEMBLY MAY REQUIRE MORE THAN 1 PULL.

NOTE: THE LAST 2 DIGITS OF THE NOSE ASSEMBLY REPRESENTS

THE LENGTH THE NOSE EXTENDS FROM THE TOOL I.E. -20 = 2.0 INCHES



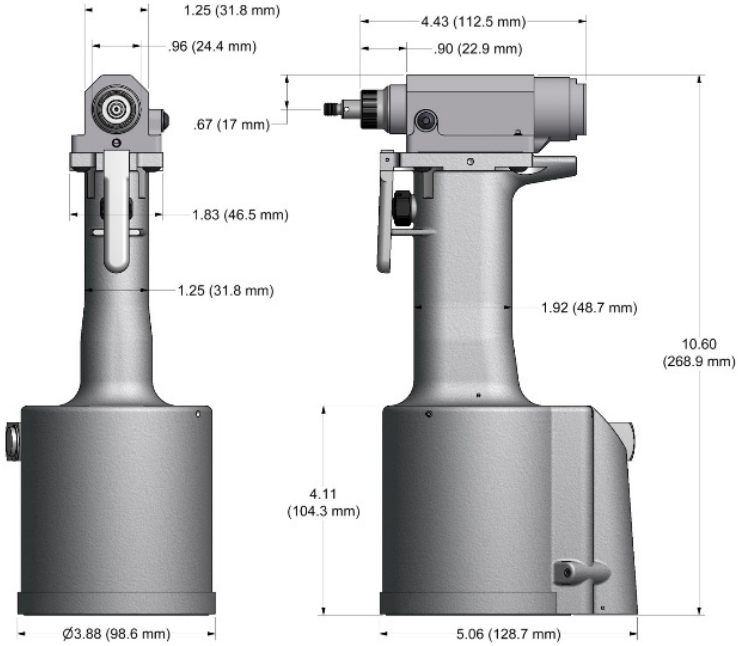

GB715

Pneudraulisches Nietgerät
PNEUDRAULIC RIVETER

Accepts Gage Bilt 715 and 51 series nose assemblies
Accepts all Olympic® screw-on nose assemblies
Accepts Cherry® 9015 & 9055 series nose assemblies

SPEZIFIKATIONEN / SPECIFICATIONS

Gewicht	Weight	3.80 lbs. (1,72 kg)
Hub	Setting stroke	**1.20" (30,5 mm)**
Leistung	Rated Pull load	**1400 lbs @ 90 psi (6,23 kN @ 6,2 bar)**

GB715 - SELECTION CHART

FASTENER	DIA	STRAIGHT	RIGHT ANGLE	OFFSET
MS20600 SERIES MS/9SP/PT BACR15CC/CF/DA	3/32 1/8 5/32 3 3/16 3	3C-715B-43 4C-715B-43 5C-715B-43 6C-715B-43	3C-715-54RA 4C-715-54RA 5C-715-54RA 6C-715-54RA	3C-715-40OS 4C-715-40OS 5C-715-40OS 6C-715-40OS
A' CODE NAS1398A NAS1399A	3/32 1/8 5/32 3 3/16 4	3A-715B-43 4A-715B-43 5A-715B-43 6A-715B-43	3A-715-54RA 4A-715-54RA 5A-715-54RA 6A-715-54RA	3A-715-40OS 4A-715-40OS 5A-715-40OS 6A-715-40OS
BLIND RIVET (SINGLE ACTION) WITH OR W/OUT DRIVE WASHER NAS1900 S & U SERIES	1/8 5/32 3 3/16 3	SMLS04-715B-43 SMLS05-715B-43 SMLS06-715B-43	SMLS04-715-54RA SMLS05-715-54RA SMLS06-715-54RA	SMLS04-715A-40OS SMLS05-715A-40OS SMLS06-715A-40OS
CHERRYMAX®, CHERRYMAX® 'AB', MBC® LOCK CREATOR BACR15FR/FP, BACR15GF/GK, NAS1900 S & U SERIES BLIND RIVET WITH DRIVE WASHER	1/8 5/32 3 3/16 3	456MAX-715-43 2	456MAX-715A-54RA 2	456MAX-715A-40OS 2
GROUND STUD	8/32 1/32	GS8-715B-43 GS10-715B-43		
FASTACK® AF5055	3/32 1/8 5/32 3/16	3C-715B-43 4C-715B-43 5C-715B-43 6C-715B-43	3C-715A-54RA 4C-715A-54RA 5C-715A-54RA 6C-715A-54RA	3C-715-40OS 4C-715-40OS 5C-715-40OS 6C-715-40OS6
SUPERTACK® AF5075, AF5076 S149A020	1/8 5/32 3/16	3A-715B-43 4A-715B-43 5A-715B-43	3A-715A-54RA 4A-715A-54RA 5A-715A-54RA	3A-715-40OS 4A-715-40OS 5A-715-40OS

**ALL COUNTERSUNK 'C' NOSE ASSEMBLIES MAY USED TO INSTALL BOTH UNIVERSAL AND COUNTERSUNK HEAD RIVETS.

1) RIGHT ANGLE NOSE ASSEMBLIES MAY REQUIRE MORE THAN ONE PULL

2) INSTALLS 1/8, 5/32 & 3/16 DIAMETERS

3) ALUMINUM ONLY.

4) SELF-PLUGGING ALUMINUM ONLY.

NOTE: THE LAST 2 DIGITS OF THE NOSE ASSEMBLY REPRESENTS THE LENGTH THE NOSE EXTENDS FROM THE TOOL I.E. -20 = 2.0 INCHES



GB740

Pneudraulisches Nietgerät
PNEUDRAULIC RIVETER

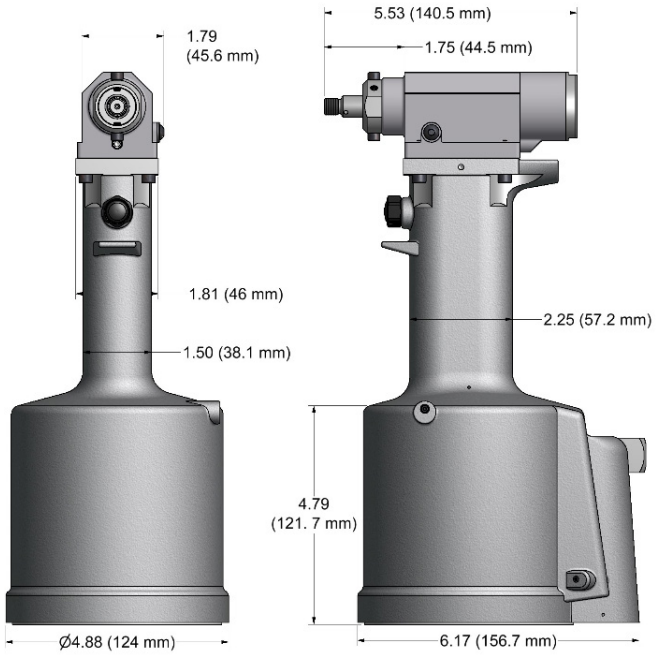

SPEZIFIKATIONEN / SPECIFICATIONS

Gewicht	Weight	6.50 lbs. (2,94 kg)
Hub	Setting stroke	**1.25" (31,7 mm)**
Leistung	Rated Pull load	**2400 lbs @ 90 psi (10,68 kN @ 6,2 bar)**

GB740 - SELECTION CHART

FASTENER	DIA	STRAIGHT	RIGHT ANGLE 2,1	OFFSET 1
MS20600 SERIES MS/9SP/PT NUT PLATE BACR15CC/CF/DA/DR	1/8 5/32 3/16 1/4	4C-740B-52 5C-740B-52 6C-740B-52 8C-740B-52	4C-715-54R 5C-715-54R 6C-715-54R	4C-715-40OS 5C-715-40OS 6C-715-40OS
OLYMPIC LOK BULB LOK NAS1398A, NAS1399A NAS1738A. NAS1739A CHERRYLOCK® 'A'	1/8 5/32 3/16 1/4	4A-740B-52 5A-740B-52 6A-740B-52 8A-740B-52	4A-715A-54R 5A-715A-54R 6A-715A-54R	4A-715-40OS 5A-715-40OS 6A-715-40OS
CHERRYLOCK® NAS 1398, NAS 1399 3 NAS 1738, NAS 1739 4	1/8 5/32 3/16 1/4	4C-640-64 5C-640-64 6C-640-64 8C-640-64		4C-640A-50 5C-640A-50 6C-640A-50 8C-640A-50
GROUND STUD M83454 BACS53B1EA1/2	# 8-32	GS8-715B-43 1	GS8-715-54RA	GS8-715-40OS

1) THESE NOSE ASSEMBLIES REQUIRE 740715 ADAPTER.

2) RIGHT ANGLE NOSE ASSEMBLIES MAY REQUIRE MORE THAN 1 PULL.

3) ALUMINUM & MONEL ONLY IN 1/4 DIAMETER.

4) THRU 3/16 DIAMETER ONLY.

NOTE: COUNTERSUNK 'C' NOSE ASSEMBLIES MAY BE USED TO INSTALL BOTH UNIVERSAL AND COUNTERSUNK HEAD RIVETS.

NOTE: THE LAST 2 DIGITS OF THE NOSE ASSEMBLIES REPRESENTS THE LENGTH THE NOSE ASSEMBLY EXTENDS FROM TOOL i.e - 52 = 5.2 inches.



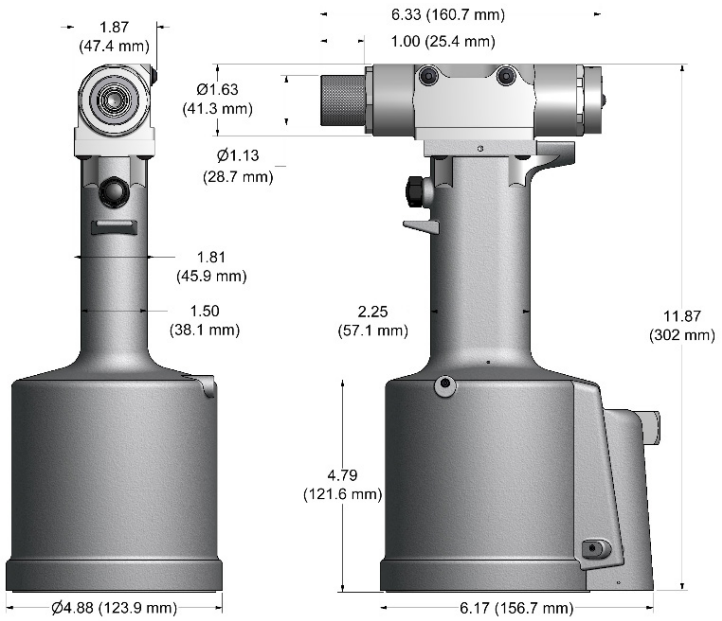

GB784

Pneudraulisches Nietgerät
PNEUDRAULIC RIVETER

SPEZIFIKATIONEN / SPECIFICATIONS

Gewicht	Weight	6.25 lbs. (2,83 kg)
Hub	Setting stroke	**.940" (23,9 mm)**
Leistung	Rated Pull load	**2650 lbs. @ 90 psi (11,79 kN @ 6,2 bar)**

Gerader Zugkopf / STRAIGHT PULLING HEAD

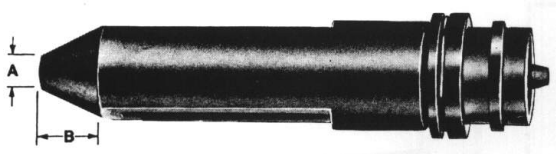

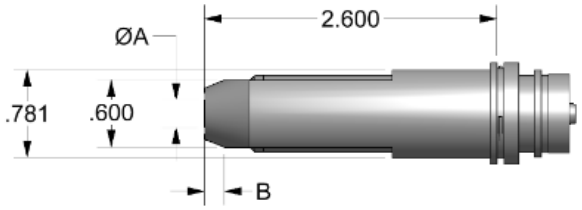

Empfohlenes Nietgerät / **RECOMMEND RIVETER:** **GB784**, G784

Für Senkkopf- und Universal-Rundkopf Niete
FOR COUNTERSUNK HEAD AND UNIVERSAL HEAD

(NAS1398, NAS1399, NAS1738, NAS1739)

Artikel-Nr. PART NO.	**Nietdurchmesser** RIVET SIZE	**A**	**B**
3C-681-25	**3/32"** (2,4 mm)	**.163** (4.14 mm)	**.332** (8,43 mm)
4C-681-25	**1/8"** (3,2 mm)	**.208** (5,28 mm)	**.341** (8,66 mm)
5C-681-25	**5/32"** (4,0 mm)	**.269** (6,83 mm)	**.352** (8,94 mm)
6C-681-25	**3/16"** (4,8 mm)	**.335** (8,51 mm)	**.386** (9,80 mm)
8C-681-25	**1/4"** (6,4 mm)	**.458** (11,63 mm)	**.398** (10,11 mm)



GB703

Pneudraulisches Nietgerät
PNEUDRAULIC RIVETER
Accepts Cherry® H703 & H743 nose assemblies

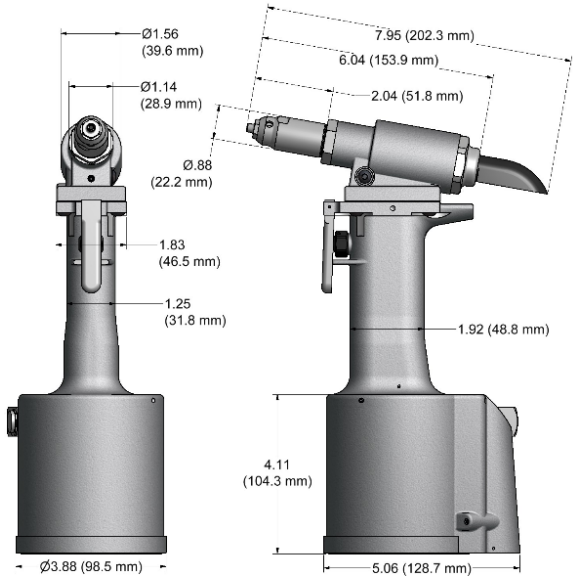

SPEZIFIKATIONEN / SPECIFICATIONS

Gewicht	Weight	4.50 lbs. (2,04 kg)
Hub	Setting stroke	**.780" (19,8 mm)**
Leistung	Rated Pull load	**2200 lbs. @ 90 psi (9,79 kN @ 6,2 bar)**

GB703 - SELECTION CHART

RIVET	DIA	NOSE ASSEMBLY	NOSE TIP 1	JAW	FOLLOWER	DESIGNATION
AVEX® (1624 PROTRUDING HEAD)	3/16	AV6-743A-18 1	10141	30617	40605	AV6
AVEX (1624 COUNTERSUNKHEAD)	3/16	6C-743A-18 1	10141-1	30617	40605	6C
KLAMP-TITE® (STRUCTURAL)	3/16	6KT-703-18 1	10263	30617	40605	6KT
RIVET	1/4	8KT-743A-2 2	-	-	-	8KT
MACHINE SCREW RIVET	5MM	MS5M-703-18 1	10332	30617	40605	5MM
NAS1719, NAS1720, NAS1721 MBC®	1/8	MBC04-703-18 1	10251	30617	40307	MBC04
	5/32	MBC05-703-18 1	10252	30617	40605	MBC05
	3/16	MBC06-703-18 1	10253	30617	40605	MBC06
MILLIMETER SEAL PLUG	4MM	5N-703-18 1	10203	30617	40605	5N
	5MM	6N-703-18 1	10204	30617	40605	6N
MONOBOLT® RIVET	3/16	MB06-734A-20 2,5	-	-	-	MB06
	1/4 3	MB08-734A-20 2,5	-	-	-	MB08
NUTPLATE RIVET CCR244/264/274 BACR15DR MS20600	3/32	3NP-703-18 1	10231	30617	40307	3NP
	1/8	5N-703-18 1	10203	30617	40605	5N
POP® OPEN END NAIL RIVET	3/32	3N-703-18 1	10201	30617	40307	3N
	1/8	4N-703-18 1	10202	30617	40307	4N
	5/32	5N-703-18 1	10203	30617	40605	5N
	3/16	6N-703-18 1	10204	30617	40605	6N
	1/4 3	8N-743A-24 2	-	-	-	8N
PLASTIC SPLIT RIVET	3/32	3P-703-18 1	10247-1	30617	40307	3P
	1/8	4P-703-18 1	10202-4	30617	40307	4P
	5/32	5P-703-18 1	10203-2	30617	40605	5P
	3/16	6P-703-18 1	10167	30617	40605	6P
	1/4	8P-743A-24 2	-	-	-	8P
SCREW RIVET	3/16	6SR-703-18 1	13506	30617	40605	6SR
T RIVET®	3/16	6T-703-18 1	10209	30617	40605	6T
	1/4 3	8T-743A-24 2	-	-	-	8T
TLR® RIVET	1/4	8TLR-743A-24 2	-	-	-	8TLR
COUNTERSUNK HEAD MAGNA-LOK® & SERRATED STEM STRUCTURAL RIVETS	3/16	C6-734A-20 2,5	-	-	-	C6
	1/4 4	C8-734A-20 2,5	-	-	-	C8
PROTRUDING HEAD MAGNA-LOK® & SERRATED STEM STRUCTURAL RIVETS	3/16	PH6-734A-20 2,5	-	-	-	PH6
	1/4 4	PH8-734A-20 2,3,5	-	-	-	PH8

1) YOU CAN CHANGE THE 703-18 NOSE ASSEMBLY (INCLUDED WITH TOOL) TO INSTALL OTHER FASTENERS BY PURCHASING NOSE TIP SHOWN AND USING APPROPRIATE FOLLOWER SHOWN.

2) NOSE ASSEMBLIES WITH A 743A-24 AND 734A-20 DESIGNATION, I.E. 8N-743A-24, MUST BE ORDERED AS COMPLETE NOSE ASSEMBLY.

3) ALUMINUM RIVET STEEL MANDREL ONLY (100 PSI REQUIRED FOR ALL 1/4" STEEL RIVETS).

4) 1/4" ALUMINUM ONLY.

5) NOSE ASSEMBLIES WITH A 734A DESIGNATION, I.E. PH6-734A-20, ARE FOR SERRATED STEM RIVETS ONLY. IF YOU ARE PULLING BOTH SMOOTH AND SERRATED STEM RIVETS YOU MUST ORDER THE NOSE ASSEMBLY WITH A 743A DESIGNATION, I.E. MGL06-743A-24.

NOTE: THE LAST 2 DIGITS OF THE NOSE ASSEMBLY REPRESENTS THE LENGTH THE NOSE EXTENDS FROM THE TOOL I.E. -20 = 2.0 INCHES



GB751

Pneudraulisches Nietgerät
PNEUDRAULIC RIVETER
Accepts 3/4" dia. Gage Bilt & Huck® noses

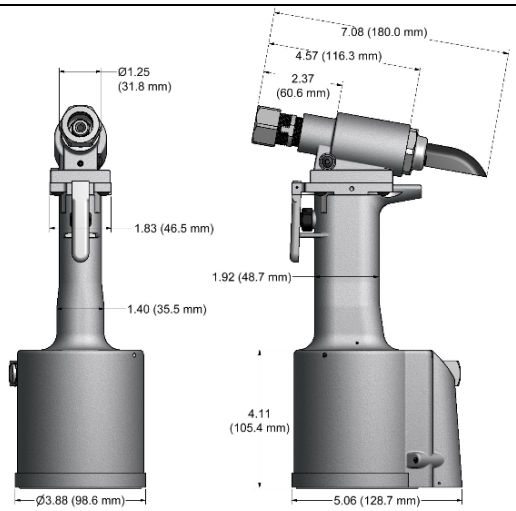

SPEZIFIKATIONEN / SPECIFICATIONS

Gewicht	Weight	4.50 lbs. (2,04 kg)
Hub	Setting stroke	**.780" (19,8 mm)**
Leistung	Rated Pull load	**2200 lbs. @ 90 psi (9,79 kN @ 6,2 bar)**

GB751 - SELECTION CHART

FASTENER	DIA	STRAIGHT		RIGHT ANGLE [1]	OFFSET
BLIND BOLT (SINGLE ACTION) WITH OR W/OUT DRIVE WASHER MS90353S & U / MS90354S & U MS21140S & U / MS21141S & U MAXIBOLT®, BACB30YY, YU, & YT HS519	1/8	SB04-752C-20 SB04-752C80	SB04-752C-45	SB04-751B-54R	SB04-752A-43OS
	5/32	SB05-752C-20 SB05-752C-80	SB05-752C-45	SB05-751B-54RA	SB05-752A-43OS
BLIND BOLT (SINGLE ACTION) WITH DRIVE WASHER MS90353S & U / MS90354S & U MS21140S & U / MS21141S & U MAXIBOLT®, BACB30YY, YU, & YT HS5192	1/8	UBB04-752C-20 UBB04-752C-80	UBB04-752C-45	UBB04-715B-54R	UBB04-752A-43OS
	5/32	UBB05-752C-20 UBB05-752C-80	UBB05-752C-45	UBB05-715B-54R	UBB04-752A-43OS
EN6122 & UAB130-EU EN6127 & UAB6127-EU EN6128 & UAB100-EU EN6129 & UABP-EU MAXIBOLT® PLUS	5/32 3/16 1/4 [3]	UAB568-713-21 [4]	UAB568-713-61 [4]		
UNIMATIC® BLIND RIVET (SINGLE ACTION) WITH OR W/OUT DRIVE WASHER NAS1900 S & U SERIES	1/8	SMLS04-752C-20	SMLS04-752C-45	SMLS04-751B-54RA	SMLS04-752A-43OS
	5/32	SMLS05-752C-20	SMLS05-752C-45	SMLS05-751B-54RA	SMLS05-752A-43OS
	3/16	SMLS06-752C-20	SMLS06-752C-45	SMLS06-751B-54RA	SMLS06-752A-43OS
	1/4 [3]	SMLS08-713-20	SMLS08-713-45	SMLS08-751B-54RA [6]	SMLS08-752A-43OS [3]
UNIMATIC® BLIND RIVET (SINGLE ACTION) WITH DRIVE WASHER NAS1900 S & U SERIES	1/8 5/32 3/16	456UBR-751A-21 [2]	456UBR-751A-61 [2]	456UBR-751D-54RA [2]	456MAX-731-43OS [2]
	1/4 [3]	UBR08-713-20	UBR08-713-45	UBR08-751B-54R	UBR08-204D-27OS UBR08-204D-37OS
"A" CODE NAS1398A & NAS1399A	3/32	3A-352B-25		3A-751C-54RA	3A-752A-43OS
	1/8	4A-752C-20	4A-752C-45	4A-751C-54RA	4A-752A-43OS
	5/32	5A-752C-20	5A-752C-45	5A-751C-54RA	5A-752A-43OS
	3/16	6A-752B-20	6A-752B-45	6A-751C-54RA	6A-752A-43OS
NUT PLATE RIVETS CCR244/264/274 BACR15DR MS20600	3/32	3NP-352-21	3NP-352-61	3NP-751B-54RA	3NP-751-43OS
	1/8	5N-352-21	5N-352-61	45N-751B-54RA	5N-751-43OS
CHERRYMAX®, CHERRYMAX® 'AB', MBC® LOCK CREATOR BACR15FR/FP, BACR15GF/GK, NAS1900 S & U SERIES BLIND RIVET WITH DRIVE WASHER	1/8 5/32 3/16	456MAX-751-21 [2]	456MAX-751A-61 [2]	456MAX-751D-54RA [2]	456MAX-752A-42OS [2]
ASP® ASP 2, ASP PF, ASP 4 FF, ASP 2 F, ASP 2 LC	13/64	ASP06-752B-20	ASP06-752B-45	ASP06-751B-54RA	ASP06-752A-43OS
NAS1719, NAS1720 NAS1721	1/8	MBC04-752C-20	MBC04-752C-45	MBC04-751C-54RA	MBC04-752A-43OS
	5/32	MBC05-752C-20	MBC05-752C-45	MBC05-751C-54RA	MBC05-752A-43OS
	3/16	MBC06-752B-20	MBC06-752B-45	MBC06-751C-54RA	MBC06-752A-43OS
GROUND STUD, M83454 & BACS53B	8/32	GS8-752C-20	GS8-752C-45	GS8-751B-54RA	GS8-752A-43OS
	10/32	GS10-752C-20	GS10-752C-45	GS10-752A-54RA	GS10-752A-43OS
POP® OPEN END NAIL RIVET	3/32	3N-751-23	3N-352-61	3N-751B-54RA	3N-751-43OS
	1/8	4N-751-23	4N-352-61	45N-751B-54RA	4N-751-43OS
	5/32	5N-751-23	5N-352-61	45N-751B-54RA	5N-751-43OS
	3/16	6N-751-23	6N-352-61	6N-751C-54RA	6N-751-43OS

1) RIGHT ANGLE NOSE ASSEMBLIES MAY REQUIRE MORE THAN ONE PULL.
2) INSTALLS 1/8", 5/32" & 3/16" DIAMETERS.
3) ALUMINUM ONLY.
4) INSTALLS 5/32", 3/16" & 1/4" DIAMETERS.
5) BACS53B -10 ONLY

NOTE: THE LAST 2 DIGITS OF THE NOSE ASSEMBLY REPRESENTS THE LENGTH THE NOSE EXTENDS FROM THE TOOL I.E. -20 = 2.0 INCHES

6) THESE NOSES FOR LIGHT DUTY / REPAIR ONLY. CONSULT GAGE BILT FOR HIGH PRODUCTION APPLICATIONS.



GB752

Pneudraulisches Nietgerät
PNEUDRAULIC RIVETER
Accepts 3/4" dia. Gage Bilt & Huck® noses

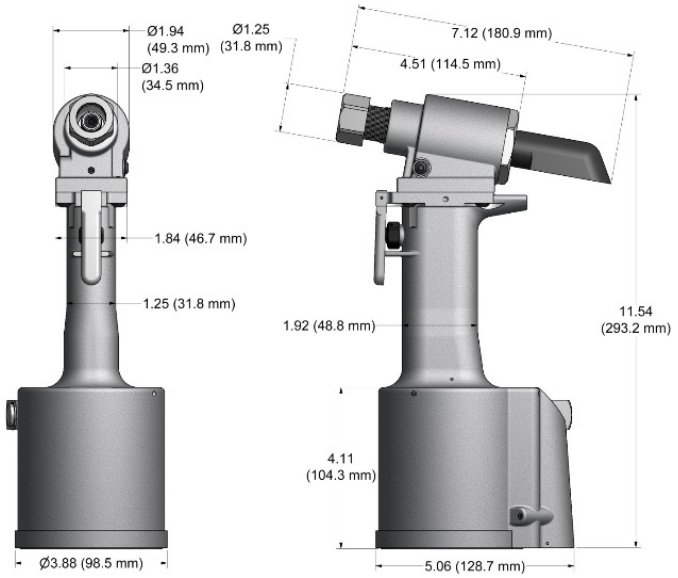

SPEZIFIKATIONEN / SPECIFICATIONS

Gewicht	Weight	4.30 lbs. (1,95 kg)
Hub	Setting stroke	**.500" (12,7 mm)**
Leistung	Rated Pull load	**3800 lbs @ 90 psi (16,91 kN @ 6,2 bar)**

GB752 - SELECTION CHART

FASTENER	DIA	STRAIGHT		*RIGHT ANGLE 1	**OFFSET	
COMMERCIAL LOCKBOLTS	3/16	LB06-722-20	LB06-722-60			
	1/4	LB08-722-20	LB08-722-60			
MULTI-GRIP LOCKBOLTS	3/16	MG06-722-20	MG06-722-60			
	1/4 5	MG08-722-20	MG08-722-60			
BLIND BOLT (SINGLE ACTION) WITH OR W/OUT DRIVE WASHER MS90353S & U / MS90354S & U MS21140S & U / MS21141S & U MAXIBOLT®, BACB30YY, YU, & YT	1/8	SB04-752C-20	SB04-752C-45	SB04-751B-54RA	SB04-752A-43OS	
	5/32	SB05-752C-20 SB05-752C-80	SB05-752C-45	SB05-751B-54RA	SB05-752A-43OS	
	3/16	SB06-752B-20 SB06-752B-80	SB06-752B-45	SB06-751B-54RA 6	SB06-204D-27OS	
BLIND BOLT (SINGLE ACTION) WITH DRIVE WASHER MS90353S & U / MS90354S & U MS21140S & U / MS21141S & U MAXIBOLT®, BACB30YY, YU, & YT	1/8	UBB04-752C-20	UBB04-752C-45	UBB04-751B-54RA	UBB04-752A-43OS	
	5/32	UBB05-752C-20 UBB05-752C-80	UBB05-752C-45	UBB05-751B-54RA	UBB05-752A-43OS	
	3/16	UBB06-752B-20 UBB06-752B-80	UBB06-752B-45	UBB06-751B-54RA	UBB06-204D-27OS	
EN6122 & UAB130-EU EN6127 & UAB6127-EU EN6128 & UAB100-EU EN6129 & UABP-EU MAXIBOLT® PLUS	5/32	UBB05-752C-20	UBB05-752C-45	UBB05-751B-54RA	UBB05-752A-43OS	
	3/16	UAB06-752B-20	UAB06-752B-45	UAB06-751B-54RA 6	UAB06-752A-43OS	
UNIMATIC® BLIND RIVET (SINGLE ACTION) WITH OR W/OUT DRIVE WASHER NAS1900 S & U SERIES	1/8	SMLS04-752C-20	SMLS04-752C-45	SMLS04-751B-54RA	SMLS04-752A-43OS	
	5/32	SMLS05-752C-20	SMLS05-752C-45	SMLS05-751B-54RA	SMLS05-752A-43OS	
	3/16	SMLS06-752B-20	SMLS06-752B-45	SMLS06-751B-54RA	SMLS06-752A-43OS	
	1/4	SMLS08-713-20	SMLS08-713-45	SMLS08-751B-54RA 6	SMLS08-204D-27OS	
UNIMATIC® BLIND RIVET (SINGLE ACTION) WITH DRIVE WASHER NAS1900 S & U SERIES	1/8					
	5/32	456UBR-751A-21 2	456UBR-751A-61 2	456UBR-751D-54RA 2	456MAX-731-43OS 2	
	3/16					
	1/4	UBR08-713-20	UBR08-713-45	UBR08-751B-54RA	UBR08-204D-247OS	UBR08-204D-37OS
"A" CODE NAS1398A & NAS1399A	3/32	3A-352B-25		3A-751B-54RA		
	1/8	4A-752C-20	4A-752C-45	4A-751B-54RA	4A-752A-43OS	
	5/32	5A-752C-20	5A-752C-45	5A-751B-54RA	5A-752A-43OS	
	3/16	6A-752B-20	6A-752B-45	6A-751B-54RA	6A-752A-43OS	
	1/4	SMLS08-713-20			SMLS08-204D-27OS	
CHERRYMAX®, CHERRYMAX® 'AB', MBC® LOCK CREATOR BACR15FR/FP, BACR15GF/GK	1/8					
	5/32	456MAX-751-23 2	456MAX-751A-61 2	456MAX-751D-54RA 2	456MAX-731-43OS 2	
	3/16					
	1/4	08MAX-752B-20	08MAX-752B-45		**08MAX-204D-27OS	**08MAX-204D-37OS
ASP® ASP 2, ASP PF, ASP 4 FF, ASP 2 F, ASP 2 LC	13/64	ASP06-752B-20	ASP06-752B-45	ASP06-751B-54RA	ASP06-752A-43OS	
	17/64	ASP08-752B-20	ASP08-752B-45		ASP08-752A-43OS	
NAS1719, NAS1720 NAS1721	1/8	MBC04-752C-20	MBC04-752C-45	MBC04-751C-54RA	MBC04-752A-43OS	
	5/32	MBC05-752C-20	MBC05-752C-45	MBC05-751C-54RA	MBC05-752A-43OS	
	3/16	MBC06-752B-20	MBC06-752B-45	MBC06-751C-54RA	MBC06-752A-43OS	
GROUND STUD, M83454 & BACS53B 4	8/32	GS8-752B-20	GS8-752B-45	GS8-751B-54RA	GS8-752A-43OS	
	10/32	GS10-752B-20	GS10-752B-45	GS10-752A-54RA	GS10-752A-43OS	

*ALL RIGHT ANGLE NOSES REQUIRE 752142 STROKE LIMITER.
**ALL OFFSET 204 SERIES NOSES REQUIRE 751204 ADAPTER.
1) RIGHT ANGLE NOSE ASSEMBLY'S MAY REQUIRE MORE THAN ONE PULL.
2) INSTALLS 1/8, 5/32 & 3/16 DIAMETERS
3) INSTALLS 5/32 & 3/16 DIAMETERS
4) BACS53B -10 ONLY
5) TWO PULLS MAY BE REQUIRED FOR 1/4" DIAMETER MULTI-GRIP LOCKBOLTS
6) THESE NOSES FOR LIGHT DUTY / REPAIR ONLY. CONSULT GAGE BILT FOR HIGH PRODUCTION APPLICATIONS

NOTE: THE LAST 2 DIGITS OF THE NOSE ASSEMBLY REPRESENTS THE LENGTH THE NOSE EXTENDS FROM THE TOOL I.E. -20 = 2.0 INCHES



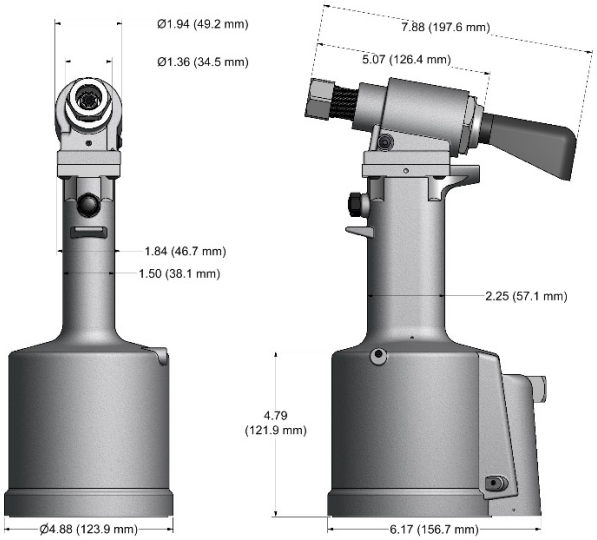

GB713

Pneudraulisches Nietgerät
PNEUDRAULIC RIVETER
Accepts 3/4" diameter Gage Bilt & Huck® noses

SPEZIFIKATIONEN / SPECIFICATIONS

Gewicht	Weight	6.50 lbs. (2,94 kg)
Hub	Setting stroke	**.760" (19,3 mm)**
Leistung	Rated Pull load	**4500 lbs. @ 90 psi (20,02 kN @ 6,2 bar)**

GB713 - SELECTION CHART

FASTENER	DIA.	STRAIGHT		* RIGHT ANGLE	* OFFSET	
C6L® LOCKBOLTS	3/16 1/4	LB06-722-20 LB08-722-20	LB06-722-60 LB08-722-60			
MAGNA-GRIP® LOCKBOLTS	3/16 1/4	MG06-722-20 MG08-722-20	MG06-722-60 MG08-722-60			
BLIND BOLT (SINGLE ACTION) WITH OR W/OUT DRIVE WASHER MS90353S & U / MS90354S & U MS21140S & U / MS21141S & U CR7000 SERIES, BACB30YY, YU, & YT	1/8 5/32 3/16 1/4	SB04-752C-20 SB05-752C-20 SB05-752C-80 SB06-752B-20 SB06-752B-80 SB08-713-20 [3]	SB04-752C-45 SB05-752C-45 SB06-752B-45 SB08-713-45 [3]	SB04-751B-54RA [4] SB05-751B-54RA [4] SB06-751B-54RA [4] SB08-713A-58RA [3]	SB04-752A-43OS SB05-752A-43OS SB06-204D-27OS [3] SB08-204D-27OS [3]	 SB06-204D-37OS [3] SB08-204D-37OS [3]
BLIND BOLT (SINGLE ACTION) WITH DRIVE WASHER MS90353S & U / MS90354S & U MS21140S & U / MS21141S & U CR7000 SERIES, BACB30YY, YU, & YT	1/8 5/32 3/16 1/4	UBB04-752C-20 UBB05-752C-20 UBB05-752C-80 UBB06-752B-20 UBB06-752B-80 UBB08-713-20 [3]	UBB04-752C-45 UBB05-752C-45 UBB06-752B-45 UBB08-713-45 [3]	UBB05-751B-54RA UBB04-751B-54RA UBB06-751B-54RA UBB08-713A-58RA [3]	UBB04-752A-43OS UBB05-752A-43OS UBB06-204D-27OS UBB08-204D-27OS [3]	 UBB06-204D-37OS [3] UBB08-204D-37OS [3]
EN6122 & UAB130-EU EN6127 & UAB6127-EU EN6128 & UAB100-EU EN6129 & UABP-EU	5/32 3/16 1/4	UAB568-713-21 [5]	UAB568-713-61 [5]	UAB06-751B-54RA [4]	UAB06-752A-43OS UAB08-204D-27OS	 UAB08-204D-37OS
BLIND RIVET (SINGLE ACTION) WITH OR W/OUT DRIVE WASHER NAS1900 S & U SERIES	1/8 5/32 3/16 1/4	SMLS04-752C-20 SMLS05-752C-20 SMLS06-752B-20 SMLS08-713-20	SMLS04-752C-45 SMLS05-752C-45 SMLS06-752B-45	SMLS06-751B-54RA [4] SMLS04-751B-54RA [4] SMLS05-751B-54RA [4] SMLS08-713B-58RA	SMLS04-752A-43OS SMLS05-752A-43OS SMLS06-752A-43OS SMLS08-752A-43OS [2]	
"A" CODE NAS1398A & NAS1399A	3/32 1/8 5/32 3/16 1/4	3A-352B-25 4A-752C-20 5A-752C-20 6A-752B-20 SMLS08-713-20	4A-752C-45 5A-752C-45 6A-752B-45	3A-751B-54RA [4] 4A-751B-54RA [4] 5A-751B-54RA [4] 6A-751B-54RA [4]	4A-752A-43OS 5A-752A-43OS 6A-752A-43OS SMLS08-204D-27OS	
T RIVET®	3/16 1/4	6T-352-21 8T-352-21	6T-352-61 8T-352-61			
PROTRUDING HEAD, MULTI-GRIP BLIND RIVETS	3/16 1/4	MGL06-752A-21 MGL08-752A-21	MGL06-752A-61 MGL08-752A-61	MGL08-713B-58RA MGL06-713B-58RA		
MONOBOLT®	3/16 1/4	MB06-752A-21 MB08-752A-21	MB06-752A-61 MB08-752A-61			
CHERRYMAX®, CHERRYMAX® 'AB', MBC® LOCK CREATOR BACR15FR/FP, BACR15GF/GK, **NAS1900 S & U SERIES BLIND RIVET WITH DRIVE WASHER**	1/8 5/32 3/16 1/4	456MAX-751A-21 [1] 08MAX-752B-20	456MAX-751A-61 [1] 08MAX-752B-45	456MAX-751D-54RA [1,4] 08MAX-713A-58RA	456MAX-731-43OS [1] 08MAX-204D-27OS	 08MAX-204D-37OS
ASP® ASP 2 , ASP PF, ASP 4 FF, ASP 2 F, ASP 2 LC	13/64 17/64 21/64	ASP06-752B-20 ASP08-752B-20 ASP10-713-20	ASP06-752B-45 ASP08-752B-45 ASP10-713-45	ASP06-751B-54RA [4]	ASP06-752A-43OS ASP08-752A-43OS ASP10-204D-27OS	 ASP10-204D-37OS
NAS1719 NAS1720 NAS1721	1/8 5/32 3/16	MBC04-752C-20 MBC05-752C-20 MBC06-752B-20	MBC04-752C-45 MBC05-752C-45 MBC06-752B-45	MBC04-751A-54RA [4] MBC05-751A-54RA [4] MBC06-751A-54RA [4]	MBC04-752A-43OS MBC05-752A-43OS MBC06-752A-43OS	
GROUND STUD, M83454, BACS53B	8/32 10/32	GS8-752C-20 GS10-752C-20	GS8-752C-45 GS10-752C-45	GS8-751B-54RA [4] GS10-752A-54RA [4]	GS8-752A-43OS GS10-752A-43OS	

*ALL OFFSET 204 SERIES NOSES REQUIRE 751204 ADAPTER & 713152 STROKE LIMITER.

1) INSTALLS 1/8", 5/32" AND 3/16" DIAMETERS.
2) ALUMINUM ONLY.
3) 105 P.S.I. REQUIRED FOR MS90353 & MS90354.
4) THESE NOSES REQUIRE 713153 STROKE LIMITER.
5) INSTALLS 5/32", 3/16", AND 1/4"

NOTE:

THE LAST2DIGITS OF THE NOSE ASSEMBLY REPRESENTS THE LENGTH THE NOSE EXTENDS FROM THE TOOL I.E. -20 = 2.0 INCHES



GB722

Pneudraulisches Nietgerät
PNEUDRAULIC RIVETER
Accepts 3/4" diameter Gage Bilt & Huck® noses

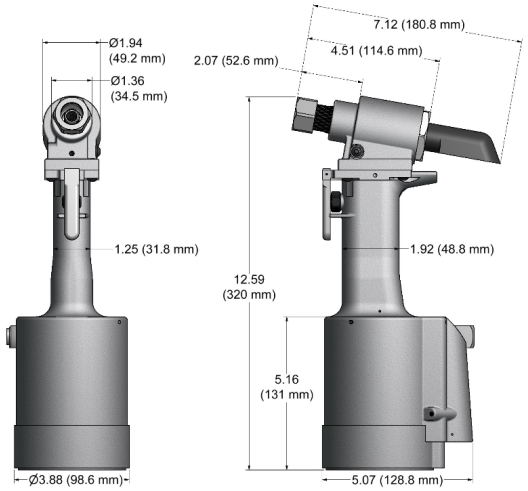

SPEZIFIKATIONEN / SPECIFICATIONS

Gewicht	Weight	5.50 lbs. (2,49 kg)
Hub	Setting stroke	**.590" (14,9 mm)**
Leistung	Rated Pull load	**4700 lbs @ 90 psi (20,91 kN @ 6,2 bar)**

GB722 - SELECTION CHART

FASTENER	DIA	STRAIGHT		*RIGHT ANGLE 2	**OFFSET	
C6L® LOCKBOLTS	3/16	LB06-722-20	LB06-722-60			
	1/4	LB08-722-20	LB08-722-60			
MAGNA-GRIP® LOCKBOLTS	3/16	MG06-722-20	MG06-722-60			
MULIT-GRIP	1/4	MG08-722-20	MG08-722-60			
PROTRUDING HEAD,	3/16	MGL06-752A-21	MGL06-752A-61	MGL06-713B-58RA		
MAGNA-LOK® BLIND RIVETS	1/4	MGL08-752A-21	MGL08-752A-61	MGL08-713B-58RA		
COUNTERSUNK HEAD,	3/16	MGLC06-752A-21	MGLC06-752A-61			
MAGNA-LOK® BLIND RIVETS	1/4	MGLC08-752A-21	MGLC08-752A-61			
BLIND BOLT (SINGLE ACTION)	1/8	SB04-752C-20	SB04-752C-45	SB04-751B-54RA	SB05-752A-43OS	
WITH OR W/OUT DRIVE WASHER	5/32	SB05-752C-20	SB05-752C-45	SB05-751B-54RA	SB05-752A-43OS	
MS90353S & U / MS90354S & U		SB05-752C-80				
MS21140S & U / MS21141S & U	3/16	SB06-752B-20	SB06-752B-45	SB06-751B-54RA 5	SB06-204D-27OS	
MAXIBOLT®, BACB30YY, YU, & YT		SB06-752B-80				
	1/4 4	SB08-713-20 4	SB08-713-45 4		SB08-204D-27OS 4	SB08-204D-37OS 4
BLIND BOLT (SINGLE ACTION)	1/8	UBB04-752C-20	UBB04-752C-45	UBB04-751B-54RA	UBB04-752A-43OS	
WITH DRIVE WASHER	5/32	UBB05-752C-20	UBB05-752C-45	UBB05-751B-54RA	UBB05-752A-43OS	
MS90353S & U / MS90354S & U		UBB05-752C-80				
MS21140S & U / MS21141S & U	3/16	UBB06-752B-20	UBB06-752B-45	UBB06-751B-54RA	UBB06-204D-27OS	
MAXIBOLT®, BACB30YY, YU, & YT		UBB06-752B-80				
	1/4 4	UBB08-713-20	UBB08-713-45		UBB08-204D-27OS 4	UBB08-204D-37OS 4
EN6122 & UAB130-EU	1/8	UAB04-752B-20	UAB04-752B-45	UAB04-751B-54RA	UAB04-752A-43OS	
EN6127 & UAB6127-EU	5/32			UBB05-751B-54RA	UBB05-752A-43OS	
EN6128 & UAB100-EU	3/16	UAB568-713-21 3	UAB568-713-61 3	UAB06-751B-54RA 5	UAB06-752A-43OS	
EN6129 & UABP-EU	1/4				UAB08-204D-27OS	UAB08-204D-37OS
UNIMATIC® BLIND RIVET	1/8	SMLS04-752C-20	SMLS04-752C-45	SMLS04-751B-54RA	SMLS04-752A-43OS	
(SINGLE ACTION)	5/32	SMLS05-752C-20	SMLS05-752C-45	SMLS05-751B-54RA	SMLS05-752A-43OS	
WITH OR W/OUT DRIVE WASHER	3/16	SMLS06-752B-20	SMLS06-752B-45	SMLS06-751B-54RA	SMLS06-752A-43OS	
NAS1900 S & U SERIES	1/4	SMLS08-713-20	SMLS08-713-45	SMLS08-751B-54RA 5	SMLS08-204D-27OS	SMLS08-204D-37OS
UNIMATIC® BLIND RIVET	1/8					
(SINGLE ACTION)	5/32	456UBR-751A-21 1	456UBR-751A-61 1	456UBR-751D-54RA 1	456MAX-731-43OS 1	
WITH DRIVE WASHER	3/16					
NAS1900 S & U SERIES	1/4	UBR08-713-20	UBR08-713-45	UBR08-751B-54RA	UBR08-204D-27OS	UBR08-204D-37OS
	3/32	3A-352B-25		3A-751B-54RA		
"A" CODE	1/8	4A-752C-20	4A-752C-45	4A-751B-54RA	4A-752A-43OS	
NAS1398A & NAS1399A	5/32	5A-752C-20	5A-752C-45	5A-751B-54RA	5A-752A-43OS	
	3/16	6A-752B-20	6A-752B-45	6A-751B-54RA	6A-752A-43OS	
	1/4	SMLS08-713-20	SMLS08-713-45	SMLS08-751B-54RA 5	SMLS08-204D-27OS	SMLS08-204D-37OS
MONOBOLT®	3/16	MB06-752A-21 6	MB06-752A-61 6	MB06-751B-54RA 6		
	1/4	MB08-752A-21 6	MB08-752A-61 6	MB08-713-58RA 6		
BACR15FR/FP, BACR15GF/GK	1/8	456MAX-751A-21 1	456MAX-751A-61 1	456MAX-751C-54RA 1	456MAX-731-43OS 1	
NAS1919 & NAS1921	5/32					
"U" TYPE BLIND RIVET	3/16					
WITH DRIVE WASHER	1/4	08MAX-752B-20	08MAX-752B-45	08MAX-713-58RA	08MAX-204D-27OS	08MAX-204D-37OS
NAS9301-9312						
ASP®	13/64	ASP06-752B-20	ASP06-752B-45	ASP06-751B-54RA	ASP06-752A-43OS	
ASP 2, ASP PF, ASP 4 FF	17/64	ASP08-752B-20	ASP08-752B-45	ASP08-751B-54RA	ASP08-752A-43OS	
ASP 2 F, ASP 2 LC	21/64	ASP10-713-20	ASP10-713-45		ASP10-204D-27OS	ASP10-204D-37OS
NAS1719, NAS1720	1/8	MBC04-752C-20	MBC04-752C-45	MBC04-751C-54RA	MBC04-752A-43OS	
NAS1721	5/32	MBC05-752C-20	MBC05-752C-45	MBC05-751C-54RA	MBC05-752A-43OS	
	3/16	MBC06-752B-20	MBC06-752B-45	MBC06-751C-54RA	MBC06-752A-43OS	
GROUND STUD	8/32	GS8-752C-20	GS8-752C-45	GS8-751B-54RA	GS8-752A-43OS	
M83454 & BACS53B	10/32	GS10-752B-20	GS10-752B-45	GS10-752A-54RA	GS10-752A-43OS	

*ALL RIGHT ANGLE NOSE ASSEMBLIES REQUIRE 722142 STROKE LIMITER.
**ALL OFFSET 204 SERIES NOSES REQUIRE 751204 ADAPTER.
1) INSTALLS 1/8 5/32 & 3/16 DIAMETERS
2) RIGHT ANGLE NOSE ASSEMBLIES MAY REQUIRE MORE THAN ONE PULL.
3) INSTALLS 5/32, 3/16 & 1/4 DIAMETERS.
4) 105 PSI REQUIRED FOR ALLOY STEEL.
5) THESE NOSES FOR LIGHT DUTY / REPAIR ONLY.
6) 2 PULLS REQUIRED FOR MOST APPLICATIONS.

NOTE: THE LAST 2 DIGITS OF THE NOSE ASSEMBLY REPRESENTS THE LENGTH THE NOSE EXTENDS FROM THE TOOL I.E. -20 = 2.0 INCHES



GB730

Pneudraulisches Nietgerät
PNEUDRAULIC RIVETER
Accepts 3/4" diameter Gage Bilt and Huck® noses

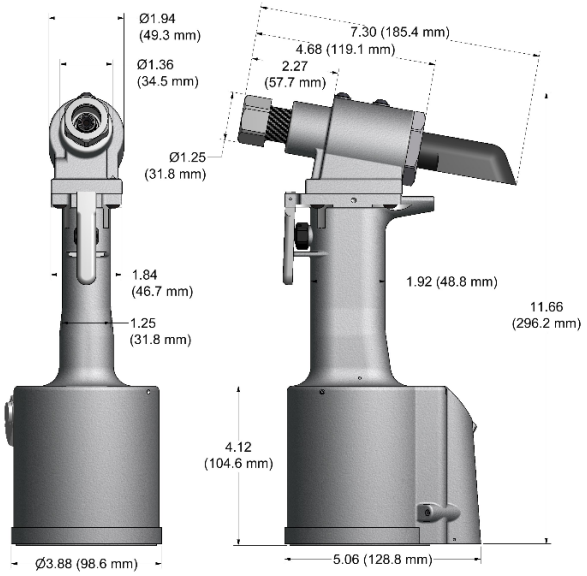

SPEZIFIKATIONEN / SPECIFICATIONS

Gewicht	Weight	4.70 lbs. (2,13 kg)
Hub	Setting stroke	**.500" (12.7 mm)**
Leistung	Rated Pull load	**4000 lbs @ 90 psi (17,8 kN @ 6,2 bar)**

GB730 - SELECTION CHART

FASTENER	DIA	STRAIGHT		RIGHT ANGLE [1]	* OFFSET	
'A' CODE NAS1 398 & NAS1 399 'A'	3/32	3A-352B-25		3A-751B-54RA		
	1/8	4A-752C-20	4A-752C-45	4A-751B-54RA	4A-752A-43OS	
	5/32	5A-752C-20	5A-752C-45	5A-751B-54RA	5A-752A-43OS	
	3/16	6A-752C-20	6A-752C-45	6A-751B-54RA	6A-752A-43OS	
	1/4	SMLS08-713-20			SMLS08-752A-43OS [3]	
ASP® 2 ASP & ASP PF ASP FF & ASP F ASP-LC & MA F	13/64	ASP06-752B-20	ASP06-752B-45	ASP06-751B-54RA	ASP06-752A-43OS	
	17/64	ASP08-752B-20	ASP08-752B-45	ASP08-751B-54RA	ASP08-752A-43OS	
COMMERCIAL LOCKBOLTS C6L® & AVDELOK®	3/16	LB06-722-20			NAS06-204C-25OS	NAS06-204C-34OS
	1/4	LB08-722-20			NAS08-204C-25OS	NAS08-204C-34OS
LGP® LOCKBOLT LGPL2SC-V BACB30VM LGPL18SC-V BACB30XT LGPL4SC-V ABS0548 LGP2SP-V BACB30VN LGPL4SP-V ASNA2392 LGPL8SC-V BACB30WD LGPL9SC-V BACB30WB LGPL9SP-V BACB30VY	5/32	LGP05-2480-10	LGP05-2480-20		LGP05-204C-25OS	LGP05-204C-30OS
		LGP05-2480-45			LGP05-204C-34OS	
	3/16	LGP06-2480-10	LGP06-2480-20		LGP06-204C-25OS	LGP06-204C-30OS
		LGP06-2480-45			LGP06-204C-34OS	
	7/32	LGP07-31-10	LGP07-31-20		LGP07-204C-25OS	LGP07-204C-30OS
		LGP07-31-45			LGP07-204C-34OS	
NAS and GP SHEAR/TENSION LOCKBOLTS BACB30TY BACB30UA BACB30TZ BACB30UB BACB30DY BACB30GX BACB30DX BACB30GP BACB30GO BACB30GY BACB30GW	5/32	NASS05-2480-10	NAST05-2480-10		NASS05-204C-25OS	NAST05-204C-20OS
		NASS05-2480-20	NAST05-2480-20		NASS05-204C-30OS	NAST05-204C-30OS
		NASS05-2480-45	NAST05-2480-45		NASS05-204C-34OS	NAST05-204C-34OS
	3/16	NAS06-2480-10	NAS06-2480-20		NAS06-204C-25OS	NAS06-204C-30OS
		NAS06-2480-45			NAS06-204C-34OS	
CHERRYMAX®, CHERRYMAX 'AB', MBC® LOCK CREATOR BACR15FR/FP, BACR15GF/GK, **NAS1900 S & U SERIES BLIND RIVET WITH DRIVE WASHER**	1/8 5/32 3/16	456MAX-751-21 [2]	456MAX-751A-61 [2]	456MAX-751D-54RA [2]	456MAX-731-43OS	
	1/4	08MAX-752B-20	08MAX-752B-45	08MAX-713A-58RA	08MAX-204D-27OS	08MAX-204D-37OS
BLIND BOLT (SINGLE ACTION) WITH OR W/OUT DRIVE WASHER MS90353S & U / MS90354S & U MS21140S & U / MS21141S & U MAXI-BOLT®, BACB30YY, YU, & YT	1/8	SMLS04-752C-20	SMLS04-752C-45			
	5/32	SB05-752C-20	SB05-752C-45	SB05-751B-54RA	SB05-752A-43OS	
		SB05-752C-80				
	3/16	SB06-752B-20	SB06-752B-45	SB06-751B-54RA	SB06-204D-27OS	
		SB06-752B-80				
EN6122 & UAB130-EU EN6127 & UAB6127-EU EN6128 & UAB100-EU EN6129 & UABP-EU	1/8			UAB04-751B-54RA	UAB04-752A-43OS	
	5/32	UAB568-713-21 [4]	UAB568-713-61 [4]			
	3/16			UBB06-751B-54RA	UBB06-752A-43OS	
	1/4					
BLIND RIVET (SINGLE ACTION) WITH OR W/OUT DRIVE WASHER NAS1900 S & U SERIES	1/8	SMLS04-752C-20	SMLS04-752C-45	SMLS04-751B-54RA	SMLS04-752A-43OS	
	5/32	SMLS05-752C-20	SMLS05-752C-45	SMLS05-751B-54RA	SMLS05-752A-43OS	
	3/16	SMLS06-752B-20	SMLS06-752B-45	SMLS06-751B-54RA	SMLS06-752A-43OS	
	1/4	SMLS08-713-20		SMLS08-713A-58RA	SMLS08-752A-43OS [3]	

*ALL RIGHT ANGLE NOSES REQUIRE 730157 STROKE LIMITER EXCEPT -58RA.
*ALL OFFSET 204 SERIES NOSES REQUIRE 751204 ADAPTER.
1) RIGHT ANGLE NOSE ASSEMBLY'S MAY REQUIRE MORE THAN ONE PULL.
2) INSTALLS 1/8, 5/32 & 3/16 DIAMETERS
3) ALUMINUM ONLY
4) INSTALLS 5/32, 3/16, & 1/4 DIAMETERS

NOTE: THE LAST 2 DIGITS OF THE NOSE ASSEMBLY REPRESENTS THE LENGTH THE NOSE EXTENDS FROM THE TOOL I.E. -20 = 2.0 INCHES



GB731

Pneudraulisches Nietgerät
PNEUDRAULIC RIVETER
Accepts diameter 3/4" Gage Bilt & Huck® noses

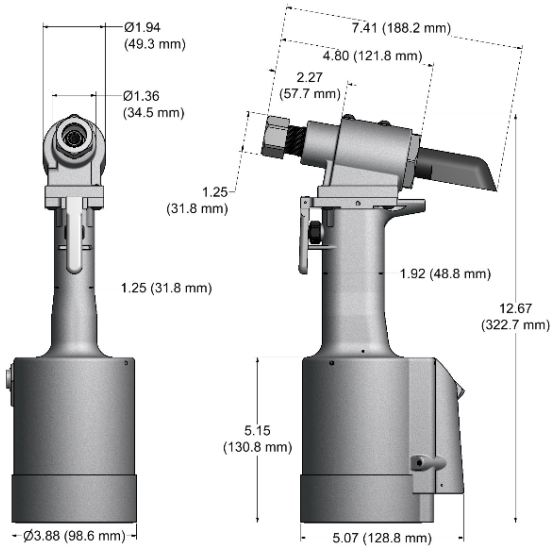

SPEZIFIKATIONEN / SPECIFICATIONS

Gewicht	Weight	5.75 lbs. (2,6 kg)
Hub	Setting stroke	**.600" (15,2 mm)**
Leistung	Rated Pull load	**4800 lbs @ 90 psi (21,36 kN @ 6,2 bar)**

GB731 - SELECTION CHART

FASTENER	DIA	STRAIGHT		* RIGHT ANGLE [1]	** OFFSET	
'A' CODE NAS1398 & NAS1399 'A'	3/32	3A-352B-25		3A-751B-54RA [5]		
	1/8	4A-752C-20	4A-752C-45	4A-751B-54RA [5]	4A-752A-43OS	
	5/32	5A-752C-20	5A-752C-45	5A-751B-54RA [5]	5A-752A-43OS	
	3/16	6A-752C-20	6A-752C-45	6A-751B-54RA [5]	6A-752A-43OS	
	1/4	SMLS08-713-20	SMLS08-713-45		SMLS08-752A-43OS	
ASP® 2 ASP & ASP PF ASP FF & ASP F ASP-LC & MAF	13/64	ASP06-752C-20	ASP06-752C-45	ASP06-751B-54RA [5]	ASP06-752A-43OS	
	17/64	ASP08-752B-20	ASP08-752B-45	ASP08-751B-54RA [5]	ASP08-752A-43OS	
LGP® LOCKBOLT						
LGPL2SC-V BACB30VM	5/32	LGP05-2480-10	LGP05-2480-20		LGP05-204C-25OS	LGP05-204C-30OS
LGPL18SC-V BACB30XT		LGP05-2480-45			LGP05-204C-34OS	
LGPL4SC-V ABS0548	3/16	LGP06-2480-10	LGP06-2480-20		LGP06-204C-25OS	LGP06-204C-30OS
LGPL2SP-V BACB30VN		LGP06-2480-45			LGP06-204C-34OS	
LGPL4SP-V ASNA2392	7/32	LGP07-731-10	LGP07-731-20		LGP07-204C-25OS	
LGPL8SC-V BACB30WD		LGP07-731-45			LGP07-204C-30OS	
LGPL9SC-V BACB30WB	1/4	LGP08-2480-10	LGP082480-20		LGP08-204C-25OS	LGP08-204D-30OS
LGPL9SP-V BACB30VY		LGP08-2480-45			LGP08-204C-34OS	
NAS and GP® SHEAR/TENSION LOCKBOLTS	5/32	NASS05-730B-10	NAST05-730B-10		NASS05-204C-25OS	NAST05-204C-25OS
		NASS05-731-20	NAST05-731-20		NASS05-204C-30OS	NAST05-204C-30OS
BACB30TY BACB30UA		NASS05-731-45	NAST05-731-45		NASS05-204C-34OS	NAST05-204C-34OS
BACB30TZ BACB30UB	3/16	NAS06-730B-10	NAS06-731-20		NAS06-204C-25OS	NAS06-204D-30OS
BACB30DY BACB30GX		NAS06-731-45			NAS06-204C-34OS	
BACB30DX BACB30GP	1/4 [3]	NAS08-730-10	NAS08-731-20		NAS08-204C-25OS	NAS08-204D-30OS
BACB30GO BACB3GY BACB30GW		NAS08-731-45			NAS08-204C-34OS	
CHERRYMAX®, CHERRYMAX® 'AB', MBC® LOCK CREATOR BACR15FR/FP, BACR15GF/GK, NAS1900 S & U SERIES BLIND RIVET **WITH DRIVE WASHER**	1/8 5/32 3/16 1/4	456MAX-751-23 [2] 08MAX-752B-20	456MAX-751A-61 [2] 8MAX-752B-45	456MAX-751D-54RA [2,5] 08MAX-713A-58RA [5]	456MAX-731-43OS [2] 08MAX-204D-27OS	 08MAX-204D-37OS
BLIND BOLT (SINGLE ACTION) **WITH OR W/OUT DRIVE WASHER** MS90353S & U / MS90354S & U MS21140S & U / MS21141S & U CR7000 SERIES, BACB30YY, YU, & YT	1/8 5/32 3/16 1/4	SMLS04-752C-20 SB05-752C-20 SB05-752C-80 SB06-752B-20 SB06-752B-80 SB08-713-20 [6]	SMLS04-752C-45 SB05-752C-45 SB06-752B-45 SB08-713-45 [6]	 SB05-751B-54RA [5] SB06-751B-54RA [5] SB08-713A-58RA [6]	 SB05-752A-43OS SB06-204D-27OS SB08-204D-27OS [6]	 SB08-204D-37OS [6]
EN6122 & UAB130-EU EN6127 & UAB6127-EU EN6128 & UAB100-EU EN6129 & UABP-EU	1/8 5/32 3/16 1/4	 UAB568-713-21 [4]	 UAB568-713-61 [4]	 UAB06-751B-54RA [5]	UAB04-752A-43OS UAB06-752A-43OS UAB08-204D-27OS	 UAB08-204D-37OS
BLIND RIVET (SINGLE ACTION) **WITH OR W/OUT DRIVEWASHER** NAS1900 S & U SERIES	1/8 5/32 3/16 1/4	SMLS04-752C-20 SMLS05-752C-20 SMLS06-752B-20 SMLS08-713-20	SMLS04-752C-45 SMLS05-752C-45 SMLS06-752B-45 SMLS08-713-45	SMLS04-751B-54RA [5] SMLS05-751C-54RA [5] SMLS06-751C-54RA [5] SMLS08-713B-58RA	SMLS04-752A-43OS SMLS05-752A-43OS SMLS06-752A-43OS SMLS08-752A-43OS	

**ALL OFFSET 204 SERIES NOSES REQUIRE 751204 ADAPTER.
1) RIGHT ANGLE NOSE ASSEMBLIES MAY REQUIRE MORE THAN ONE PULL.
2) INSTALLS 1/8, 5/32 & 3/16 DIAMETERS.
3) NOT FOR TENSION ALLOY
4) INSTALLS 5/32, 3/16 & 1/4 DIAMETERS.
5) RIGHT ANGLE NOSE REQUIRES 731154 STROKE LIMITER.
6) 105 P.S.I. REQUIRED FOR MS90353 & MS90354

NOTE: THE LAST 2 DIGITS OF THE NOSE ASSEMBLY REPRESENTS THE LENGTH THE NOSE EXTENDS FROM THE TOOL I.E. -20 = 2.0 INCHES



GB731OS

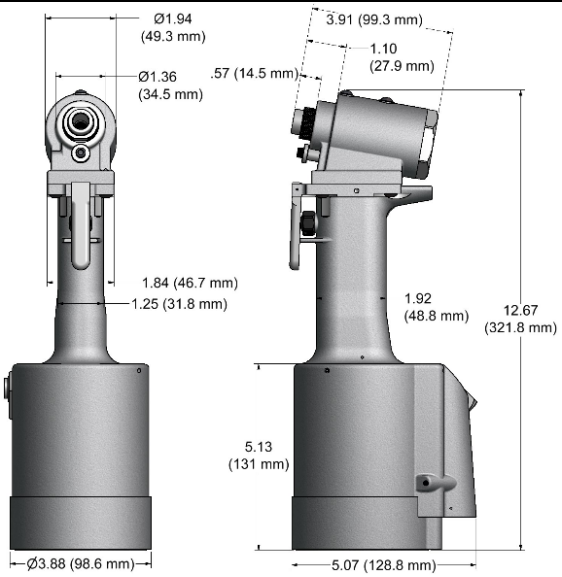

Pneudraulisches Nietgerät
PNEUDRAULIC RIVETER
Accepts offset Gage Bilt 204 style noses
Nose Assembly sold separately !
Zugköpfe gehören nicht zum Lieferumfang !

SPEZIFIKATIONEN / SPECIFICATIONS

Gewicht	Weight	5.7 lbs. (2,58 kg)
Hub	Setting stroke	**.600" (15,2 mm)**
Leistung	Rated Pull load	**4800 lbs @ 90 psi (21,36 kN @ 6,2 bar)**

GB731OS - SELECTION CHART

FASTENER	DIA.	STANDARD	STRADDLE NOES (1)	LONG
LOCKBOLT, NAS SHEAR PULL TYPE, NAS TENSION PULL TYPE, NASS = SHEAR & GP NAST = TENSION	5/32" 3/16" 1/4"	NAST05-204C-25OS NASS05-204C-25OS NAS06-204C-25OS NAS08-204C-25OS	NAST05-204C-30OS NASS05-204C-30OS NAS06-204D-30OS NAS08-204D-30OS	NAST05-204C-34OS NASS05-204C-34OS NAS06-204C-34OS NAS08-204C-34OS
MGP®	4 mm 5 mm	MGP4-204C-25OS MGP5-204C-25OS	MGP4-204C-30OS MGP5-204C-30OS	MGP4-204C-34OS MGP5-204C-34OS
LGP® **L**ightweight **G**roove **P**roportion LOCKBOLT	5/32" 3/16" 7/32" 1/4"	LGP05-204C-25OS LGP06-204C-25OS LGP07-204C-25OS LGP08-204C-25OS	LGP05-204C-30OS LGP06-204C-30OS LGP07-204C-30OS LGP08-204D-30OS	LGP05-204C-34OS LGP06-204C-34OS LGP07-204C-34OS LGP08-204C-34OS
MLGP®	4 mm 5 mm	MLGP4-204C-25OS MLGP5-204C-25OS	MLGP4-204C-30OS MLGP5-204C-30OS	MLGP4-204C-34OS MLGP5-204C-34OS
BLIND RIVET (SINGLE ACTION) **WITH OR W/OUT DRIVE WASHER** NAS1900 S & U SERIES	1/8" 5/32" 3/16" 1/4"	SMLS04-204D-27OS SMLS05-204D-27OS SMLS06-204D-27OS SMLS08-204D-27OS		SMLS04-204D-37OS SMLS05-204D-37OS SMLS06-204D-37OS SMLS08-204D-37OS
BLIND BOLT (SINGLE ACTION) **WITH OR W/OUT DRIVE WASHER** MS90353S & U / MS90354S & U MS21140S & U / MS21141S & U CR7000 SERIES, BACB30YY, YU, & YT	5/32" 3/16" 1/4"	SB05-204D-27OS SB06-204D-27OS SB08-204D-27OS		SB05-204D-37OS SB06-204D-37OS SB08-204D-37OS
EN6122 & UAB130-EU EN6127 & UAB6127-EU EN6128 & UAB100-EU EN6129 & UABP-EU	3/16" 1/4"	UAB06-204D-27OS UAB08-204D-27OS		UAB06-204D-37OS UAB08-204D-37OS
BACR15FR/FP, BACR15GF/GK, **NAS1900 S & U SERIES** **BLIND RIVET WITH DRIVE WASHER** NAS9301-9312	1/4"	08MAX-204D-27OS		08MAX-204D-37OS
"A" CODE NAS1398A & NAS1399A	1/8" 5/32" 3/16" 1/4"	4A-204D-27OS 5A-204D-27OS 6A-204D-27OS SMLS08-204D-27OS		4A-204D-37OS 5A-204D-37OS 6A-204D-37OS SMLS08-204D-37OS
ASP® 2, ASP PF, ASP 4 FF, ASP 2 F, ASP 2 LC	13/64" 17/64" 21/64"	ASP06-204D-27OS ASP08-204D-27OS ASP10-204D-27OS		ASP06-204D-37OS ASP08-204D-37OS ASP10-204D-37OS
NAS1719, NAS1720, NAS1721 & MBC	1/8" 5/32" 3/16"	MBC04-204D-27OS MBC05-204D-27OS MBC06-204D-27OS		MBC04-204D-37OS MBC05-204D-37OS MBC06-204D-37OS
GROUND STUD, BACS53B 2	13/64" 17/64"	GS8-204D-32OS GS10-204D-32OS		GS8-204D-42OS GS10-204D-42OS

1) -30 STRADDLE NOSES ARE DESIGNED TO REACH OVER THE COLLAR
2) BACS53B -10 ONLY
NOTE: THE LAST 2 DIGITS OF THE NOSE ASSEMBLY REPRESENTS THE LENGTH THE NOSE EXTENDS FROM THE TOOL I.E. -20 = 2.0 INCHES



GB745

Pneudraulisches Nietgerät
PNEUDRAULIC RIVETER
Accepts 1.1/16" diameter Gage Bilt & Huck® noses

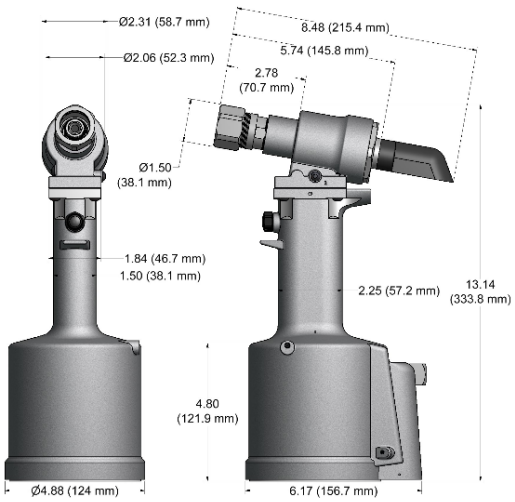

SPEZIFIKATIONEN
SPECIFICATIONS

Weight Gewicht	7.20 lbs. 3,26 kg
Setting stroke Hub	**.620"** **15,75 mm**
Rated Pull load Leistung	**6300 lbs @ 90 psi** **28,03 kN @ 6,2 bar**

GB745 - SELECTION CHART

FASTENER	DIA	STRAIGHT		* OFFSET	
A' CODE NAS1395 & NAS1399 'A'	1/8	4A-745C-23	4A-745C-48	4A-752A-43OS 6	
	5/32	5A-745C-23	5A-745C-48	5A-752A-43OS 6	
	3/16	6A-745B-23	6A-745B-48	6A-752A-43OS 6	
	1/4	SMLS08-755-23	SMLS08-755-48	SMLS08-204D-27OS	
2 ASP & ASP PF ASP FF & ASP F ASP-LC & MAF	13/64	ASP06-745B-23	ASP06-745C-48	ASP06-752A-43OS 6	
	17/64	ASP08-745B-23	ASP08-745C-48	ASP08-752A-43OS 6	
	21/64	ASP10-755-23	ASP10-755-48	ASP10-204D-37OS	
BOM & AVBOLT	1/4	BOM08-755-23			
COMMERCIAL LOCKBOLTS C6L ADVELOK	3/16	NAS06-745B-12		NAS06-204C-25OS	NAS06-204D-30OS
		NAS06-755-23	NAS06-755-48	NAS06-204C-34OS	
	1/4	NAS08-745B-12		NAS08-204C-25OS	NAS08-204D-30OS
		NAS08-755-23	NAS08-755-48	NAS08-205A-31	NAS08-204C-34OS
	5/16 1	LB10-745C-26	NAS10-756-48	NAS10-205C-31	
	3/8 3	LB12-756-26	NAS12-756-48	NAS12-205A-31	
LGP LOCKBOLT LGPL2SC-V BACB30VM LGPL18SC-V BACB30XT LGPL4SC-V ABS0548 LGPL2SP-V BACB30VN LGPL4SP-V ASNA2392 LGPL8SC-V BACB30WD LGPL9SC-V BACB30WB LGPL9SP-V BACB30VY	5/32	LGP05-2581-12		LGP05-204C-25OS	LGP05-204C-30OS
		LGP05-2581-23	LGP05-2581-48	LGP05-204C-34OS	
	3/16	LGP06-2581-12		LGP06-204C-25OS	LGP06-204C-30OS
		LGP06-2581-23	LGP06-2581-48	LGP06-204C-34OS	
	7/32	LGP07-745B-12		LGP07-204C-25OS	LGP07-204C-30OS
		LGP07-755-23	LGP07-755-48	LGP07-204C-34OS	
	1/4	LGP08-2581-12		LGP08-204C-25OS	LGP08-204D-30OS
		LGP08-2581-23	LGP08-2581-48	LGP08-204C-34OS	LGP08-205A-31
	5/16	LGP10-745B-12			
		LGP10-2581-23	LGP10-2581-48	LGP10-205A-31	
NAS and GP SHEAR/TENSION LOCKBOLTS BACB30TY BACB30UA BACB30TZ BACB30UB BACB30DY BACB30GX BACB30DX BACB30GP BACB30GO BACB30GY BACB30GW	5/32	NASS05-755-12	NAST05-2581-12	NASS05-204C-25O	NAST05-204C-20OS
		NASS05-755-23	NAST05-755-23	NASS05-204C-30O	NAST05-204C-30OS
		NASS05-755-48	NAST05-755-48	NASS05-204C-34O	NAST05-204C-34OS
	3/16	NAS06-745B-12		NAS06-204C-25OS	NAS06-204C-30OS
		NAS06-755-23	NAS06-755-48	NAS06-204C-34OS	
	1/4	NAS08-745B-12		NAS08-204C-25OS	NAS08-204D-30OS
		NAS08-755-23	NAS08-755-48	NAS08-204C-34OS	NAS08-205A-31
	5/16	NAS10-745B-12		NAS10-205C-31	
		NAS10-756-26	NAS10-756-48		
	3/8 1	NAS12-745B-12		NAS12-205A-31	
		NAS12-756-26	NAS12-756-48		
MULTI-GRIP LOCKBOLT	3/16	MG06-745-48			
	1/4	MG08-745-48			
PT/MS/9SP, MS20600 & MS20601	1/4	PT08-745C-48			
CHERRYMAX®, CHERRYMAX® 'AB', MBC® LOCK CREATOR ,BACR15FR/FP, BACR15GF/GK **NAS1900 S & U SERIES BLIND** **RIVET WITH DRIVE WASHER**	1/8				
	5/32	456MAX-751A-21 5	456MAX-751A-61 5	456MAX-752-42OS 5	
	3/16				
	1/4	08MAX-745B-23	08MAX-745C-48	08MAX-204D-27OS	08MAX-204D-37OS
BLIND BOLT (SINGLE ACTION) **WITH OR W/OUT DRIVE WASHER** M S90353S & U / M S90354S & U M S21140S & U / M S21141S & U M A XI-B OLT®, B A CB 30YY, YU, & YT	5/32	SB05-745C-23	SB05-745C-48	SB05-752A-43OS 6	
	3/16	SB06-745B-23	SB06-745B-48	SB06-752D-27OS	SB06-204D-37OS
	1/4	SB08-755-23	SB08-755-48	SB08-204D-27OS	SB08-204D-37OS
	5/16 2	SB10-756-28	SB10-756-48	SB10-205A-35	
BLIND BOLT (SINGLE ACTION) **WITH DRIVE WASHER** MS90353S & U / MS90354S & U MS21140S & U / MS21141S & U CR7000 SERIES, BACB30YY, YU, & YT	5/32	UBB05-745C-23	UBB05-745C-48	UBB05-752A-43OS	
	3/16	UBB06-745B-23	UBB06-745B-48	UBB06-204D-27OS	UBB06-204D-37OS
	1/4	UBB08-755-23	UBB08-755-48	UBB08-204D-27OS	UBB08-204D-37OS
	5/16 2	UBB10-756-28	UBB10-756-48	UBB10-205B-35	
EN6122 & UAB130-EU EN6127 & UAB6127-EU EN6128 & UAB100-EU EN6129 & UABP-EU	5/32	UAB568-713-21 4	UAB568-713-61 4	UAB05-752A-43OS 6	
	3/16			UAB06-752A-43OS 6	
	1/4			UAB08-204D-27OS	UAB08-204D-37OS
BLIND RIVET (SINGLE ACTION) **WITH OR W/OUT DRIVE WASHER** NAS1900 S & U SERIES	1/8	SMLS04-745C-23	SMLS04-745C-48	SMLS04-752A-43OS 6	
	5/32	SMLS05-745C-23	SMLS05-745C-48	SMLS05-752A-43OS 6	
	3/16	SMLS06-745B-23	SMLS06-745B-48	SMLS06-752A-43OS 6	
	1/4	SMLS08-755-23	SMLS08-755-48	SMLS08-204D-27OS	

*ALL OFFSET 204 SERIES NOSES REQUIRE 353204 ADAPTER, & ALL OFFSET 205 SERIES NOSES REQUIRE 353205 ADAPTER.		1) ALL MATERIALS EXCEPT TITANIUM & STAINLESS.
2) 100 PSI REQUIRED FOR ALLOY (MS90353 & 4).	3) GENERAL PURPOSE LOCKBOLTS ONLY.	4) INSTALLS 5/32, 3/16 & 1/4 DIAMETERS.
5) INSTALLS 1/8, 5/32, & 3/16 DIAMETERS	6) ALL OFFSET 713 AND 752 SERIES NOSES REQUIRE 745751 ADAPTER.	7) 105 P.S.I. REQUIRED FOR ALLOY STEEL.
NOTE: THE LAST 2 DIGITS OF THE NOSE ASSEMBLY REPRESENTS THE LENGTH THE NOSE EXTENDS FROM THE TOOL I.E. -20 = 2.0 INCHES		



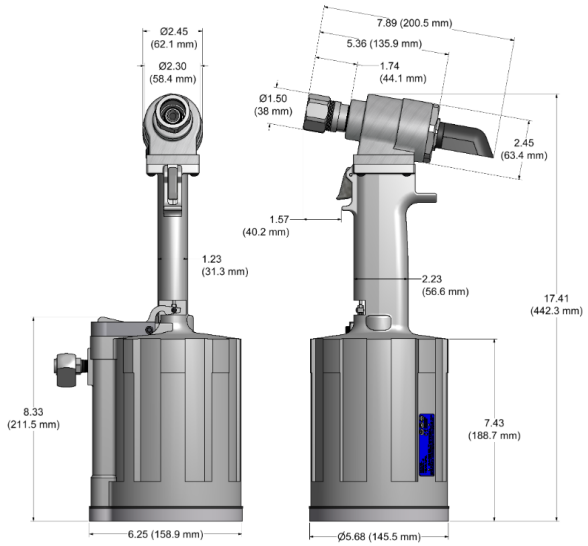

GB756

Pneudraulisches Nietgerät
PNEUDRAULIC RIVETER
Accepts 1.1/16" diameter Gage Bilt & Huck® noses

SPEZIFIKATIONEN / SPECIFICATIONS

Gewicht	Weight	11.1 lbs. (5,03 kg)
Hub	Setting stroke	**.960" (24,38 mm)**
Leistung	Rated Pull load	**10000 lbs @ 90 psi (44,49 kN @ 6,2 bar)**

GB756 - SELECTION CHART

FASTENER	DIA	STRAIGHT		** RIGHT ANGLE	*OFFSET	
ASP® 2 ASP & ASP PF ASP FF & ASP F ASP-LC and MAF	 13/64 17/64 21/64	 ASP06-745B-23 ASP08-745B-23 ASP10-755-23	 ASP06-745C-48 ASP08-745C-48 ASP10-755-48	 ***ASP06-751B-54RA	 ASP06-204D-27OS ASP08-204D-27OS ASP10-204D-27OS	 ASP06-204D-37OS ASP08-204D-37OS ASP10-204D-37OS
BOM® AVBOLT®	1/4 5/16	BOM08-755-23 BOM10-756-26				
COMMERCIAL LOCKBOLTS C6L® AVDELOK®	3/16 1/4 5/16 3/8	NAS06-745B-12 NAS06-755-23 NAS08-745B-12 NAS08-755-23 LB10-745C-26 LB12-756-26	NAS06-755-48 NAS08-755-48 NAS10-756-48 NAS12-756-48		NAS06-204C-25OS NAS06-204C-34OS NAS08-204C-25OS NAS08-205A-31 NAS10-205D-31 NAS12-205A-31	NAS06-204C-30OS NAS08-204D-30OS NAS08-204C-34OS
LGP® LOCKBOLT LGPL2SC-V BACB30VM LGPL18SC-V BACB30XT LGPL4SC-V ABS0548 LGPL2SP-V BACB30VN LGPL4SP-V ASNA2392 LGPL8SC-V BACB30WD LGPL9SC-V BACB30WB LGPL9SP-V BACB30VY	5/32 3/16 7/32 1/4 5/16 3/8	LGP05-2581-12 LGP05-2581-48 LGP06-2581-12 LGP06-2581-48 LGP07-745B-12 LGP07-755-48 LGP08-2581-12 LGP08-2581-48 LGP10-2581-12 LGP10-2581-48 LGP12-745B-12 LGP12-756-48	LGP05-2581-23 LGP06-2581-23 LGP07-755-23 LGP08-2581-23 LGP10-2581-23 LGP12-756-26		LGP05-204C-25OS LGP05-204C-34OS LGP06-204C-25OS LGP06-204C-34OS LGP07-204C-25OS LGP07-204C-34OS LGP08-204C-25OS LGP08-204C-34OS LGP10-205D-31 LGP12-205A-31	LGP05-204C-30OS LGP06-204C-30OS LGP07-204C-30OS LGP08-204D-30OS LGP08-205A-31
NAS and GP® SHEAR/TENSION LOCKBOLTS BACB30TY BACB30UA BACB30TZ BACB30UB BACB30DY BACB30GX BACB30DX BACB30GP BACB30GO BACB30GY BACB30GW	5/32 3/16 1/4 5/16 3/8	NASS05-755-12 NASS05-755-23 NASS05-755-48 NAS06-745B-12 NAS06-755-48 NAS08-745B-12 NAS08-755-48 NAS10-745B-12 NAS10-756-48 NAS12-745B-12 NAS12-756-48	NAST05-2581-12 NAST05-755-23 NAST05-755-48 NAS06-755-23 NAS08-755-23 NAS10-756-26 NAS12-756-26		NASS05-204C-25OS NASS05-204C-30OS NASS05-204C-34OS NAS06-204C-25OS NAS06-204C-34OS NAS08-204C-25 NAS08-204C-34 NAS10-205D-31 NAS12-205A-31	NAST05-204C-20OS NAST05-204C-30OS NAST05-204C-34OS NAS06-204C-30OS NAS08-204D-30 NAS08-205A-31
MULTI-GRIP LOCKBOLT MAGNA-GRIP® and MAXLOK®	3/16 1/4 5/16 3/8	MG06-745-48 MG08-745-48 MG10-756-28 MG12-756-28				
MULTI-GRIP STRUCTURAL BLIND RIVET	5/16 3/8	MGL10-353-28 MGL12-353C-28				
OVERSIZE **S**TRUCTURAL **R**IVET	1/4 5/16 3/8	OS08-353A-48 OS10-756-26 OS12-756-26	 OS10-756-48 OS12-756-48			
BLIND BOLT (SINGLE ACTION) **WITH OR W/OUT DRIVE WASHER** MS90353S & U / MS90354S & U MS21140S & U / MS21141S & U CR7000 SERIES,BACB30YY, YU, & YT	5/32 3/16 1/4 5/16 3/8	SB05-745C-23 SB06-745B-23 SB08-755-23 SB10-756-28 SB12-756-28	SB05-745C-48 SB06-745B-48 SB08-755-48 SB10-756-48 SB12-756-48	***SB05-751B-54RA ***SB06-751B-54RA ****SB08-713A-58RA	SB05-204D-27OS SB06-204D-27OS SB08-204D-27OS SB08-205-35 SB10-205A-35 SB12-205A-35	SB05-204D-37OS SB06-204D-37OS SB08-204D-37OS
BLIND BOLT (SINGLE ACTION) **WITH DRIVE WASHER** MS90353S & U / MS90354S & U MS21140S & U / MS21141S & U CR7000 SERIES, BACB30YY, YU, & YT	5/32 3/16 1/4 5/16 3/8	UBB05-745C-23 UBB06-745B-23 UBB08-755-23 UBB10-756-28 UBB12-756-28	UBB05-745C-48 UBB06-745B-48 UBB08-755-48 UBB10-756-48 UBB12-756-48	***UBB05-751B-54RA ***UBB06-751B-54RA ****UBB08-713A-58RA	UBB05-204D-27OS UBB06-204D-27OS UBB08-204D-27OS UBB08-205-35 UBB10-205A-35 UBB12-205A-35	UBB05-204D-37OS UBB06-204D-37OS UBB08-204D-37OS

*ALL OFFSET 204 SERIES NOSES REQUIRE 353204 ADAPTER WITH 756152 STROKE LIMITER..
*ALL OFFSET 205 SERIES NOSES REQUIRE 353205 ADAPTER WITH 756153 STROKE LIMITER.
**NOSE REQUIRES 745751 ADAPTER
***-54RA RIGHT ANGLE SERIES NOSES REQUIRE 745751 ADAPTER WITH 756155 STROKE LIMITER.
****-58RA RIGHT ANGLE NOSES REQUIRE 745751 WITH 756152 STROKE LIMITER

NOTE: THE LAST 2 DIGITS OF THE NOSE ASSEMBLY REPRESENTS THE LENGTH THE NOSE EXTENDS FROM THE TOOL I.E. -20 = 2.0 INCHES



HUCK 200

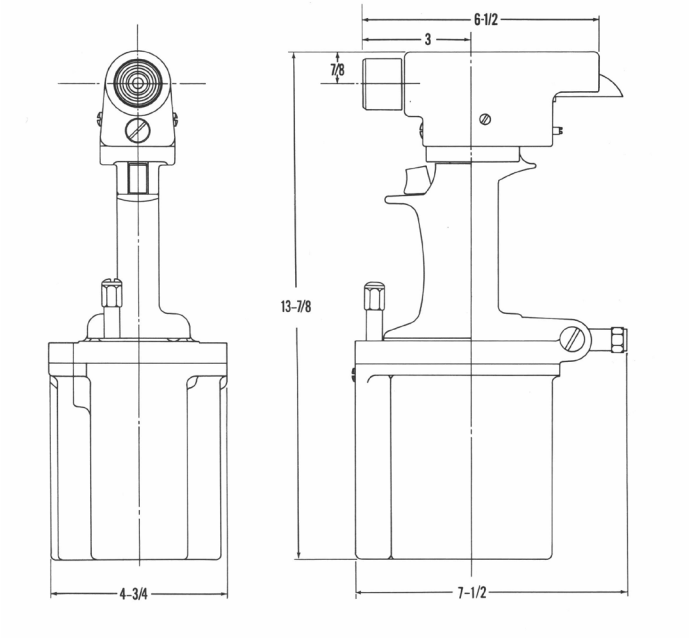

Pneudraulisches Nietgerät
PNEUDRAULIC RIVETER

SPEZIFIKATIONEN / SPECIFICATIONS (Without Nose Assembly)

Length (overall)	71/2 inches	190 mm
Height (overall)	13-7/8 inches	352 mm
Width (head)	2 inches	51 mm
Width (cylinder)	4 3/4 inches	121 mm
Weight	10-1/2 pounds	4 8 kg
Stroke	1-3/16 inches	30 mm
Pull Load	3000 lbs	13,35 kN
Air Required	18CFM@ 90-100 psi	009 m3/s @ 6,2-6,3 bar

HUCK® 200 - SELECTION CHART

FASTENER	DIA	STRAIGHT	*OFFSET
DOUBLE ACTION BLIND BOLT MS90353 & MS90354	5/32	B05-200B-21 (99-600)	
MS21140 & MS21141	3/16	B06-200B-21 (99-589)	
DOUBLE ACTION BLIND RIVET NAS1919B & NAS1921B	1/8	MLS04-200B-20 (99-1013)	
NAS1919C & NAS1921C	5/32	MLS05-200B-20 (99-458)	
NAS1919M & NAS1921M	3/16	MLS06-200B-20 (99-459)	

NOTE: THE LAST 2 DIGITS OF THE NOSE ASSEMBLY REPRESENTS THE LENGTH THE NOSE EXTENDS FROM THE TOOL I.E. -20 = 2.0 INCHES

Blindnietmutternzange, schwenkbar
BLIND RIVET NUT HAND PLIER, SWIVEL-MOUNTED

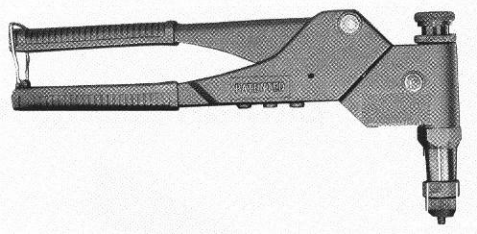

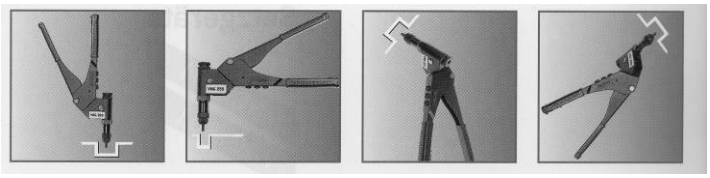

EH-VNG255

Satz im Kunststoffkasten, bestehend aus:

1 St. Handzange
1 Satz Umrüstsätze für Blindnietmuttern, für Größe:
Metrisch: M4, M5, M6
Zöllig : UNC 6-32, UNC 8-32, UNC 10-24, UNF 10-32, UNF 1/4-28
1 Satz Umrüstsatz für Blindnietschrauben, für Größe:
Metrisch: M4, M5

SET IN PLASTIC-CASE, CONSISTING OF:

1 EA HANDPLIER
1 SET ADAPTER FOR BLIND-NUTS SIZE:
METRIC : M4, M5, M6
INCH : UNC 6-32, UNC 8-32, UNC 10-24, UNF 10-32, UNF 1/4-28
1 SET ADAPTER FOR BLIND-BOLTS SIZE:
METRIC : M4, M5

Handnietgerät für Einnietmuttern
BLIND RIVET NUT SPEED DRIVER



Artikel-Nr. PART-NO.	Gewindegröße THREAD SIZE	Artikel Nr. Ersatzdorne mit Mundstück PART NO. MANDRELS AND NOSEPIECES
L6000-A	**6-32**	**SCA-6-32**
L6000-B	**8-32**	**SCA-8-32**
L6000-C	**10-32**	**SCA-10-32**
L6000-D	**1/4"-28**	**SCA-1/4"-28**

Hydr.-Handnietgerät für Einnietmuttern
HYDRAULIC HAND RIVETER/NUTSETTER



D-100-RN

ca./appr. 4000 lbs Zugkraft/Pulling Force

Satz mit folgendem Lieferumfang:
KIT WITH FOLLOWING CONTENTS:

PART-NO.	Beschreibung	DESCRIPTION
D-100-C	Hand-Hydraulik Nietgerät	HAND HYDR. RIVETER
Für Cherry-Blindieten / FOR CHERRY RIVETS		
F-159-C	Mundstück 1/8"	NOSEPIECE 1/8"
F-143-C	Mundstück 5/32"-3/16"	NOSEPIECE 5/32"-3/16"
F-142-C	Mundstück 1/4"	NOSEPIECE 1/4"
F-156-C	Mundstück 3/32"	NOSEPIECE 3/32"
Für Einnietmuttern / FOR RIVET-NUTS		
F-170-A	Adapter Spindel	MASTER SHAFT
F-171	Adapter Mutter	TURN NUT
F-360-C	Zugdorn 6-32	PULL-UP-STUD 6-32
F-361-C	Zugdorn 8-32	PULL-UP-STUD 8-32
F-362-C	Zugdorn 10-32	PULL-UP-STUD 10-32
F-363-C	Zugdorn 1/4-28	PULL-UP-STUD 1/4-28
F-367-C	Mundstück Gr. 6	ANVIL NO. 6
F-364-C	Mundstück Gr. 8	ANVIL NO. 8
F-365-C	Mundstück Gr. 10	ANVIL NO. 10
F-366-C	Mundstück Gr. 1/4	ANVIL NO.1/4
F-197	Aufbewahrungskasten	PLASTIC CASE

Visu-Lok

Blind Fastener Tools

Master Torque Driver

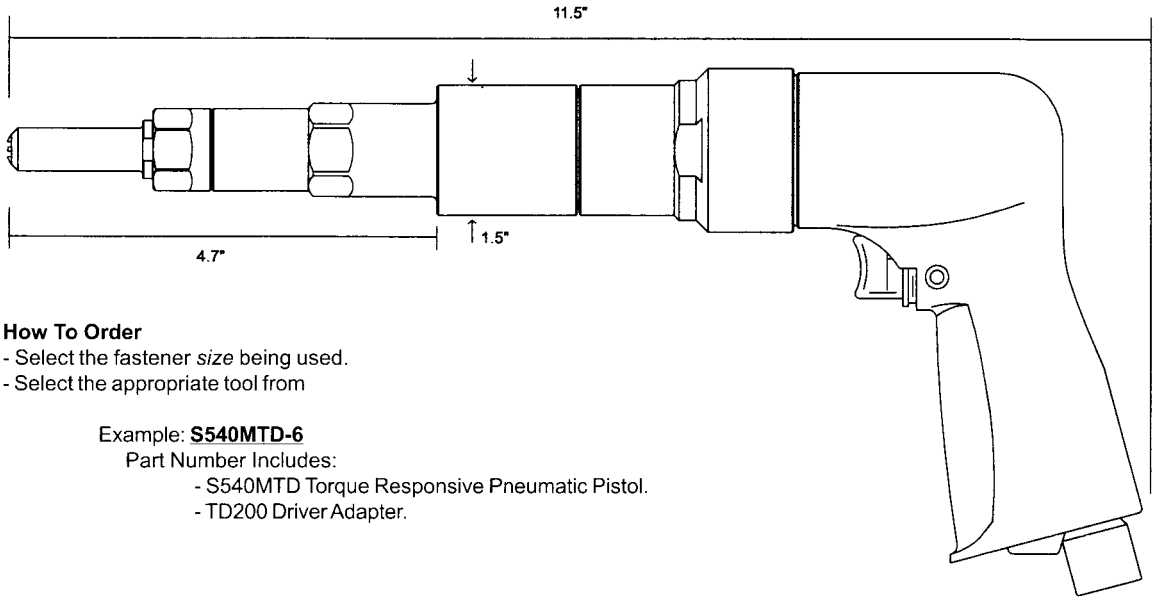

How To Order
- Select the fastener *size* being used.
- Select the appropriate tool from

Example: **S540MTD-6**
Part Number Includes:
- S540MTD Torque Responsive Pneumatic Pistol.
- TD200 Driver Adapter.

Pin Dia	Visu-Lok Series	Pneumatic Pistol	Driver Adapter	Nose	Driver
5/32	flush - 5	S540MTD-5	TD165	PW3652	TD1651
3/16	flush - 6	S540MTD-6	TD200	PW3002	TD2001
1/4	flush - 8	S540MTD-8	TD260	PW3602	TD2601
5/16	flush - 10	S540MTD-10	TD312	PW3122	TD3121
3/8	flush - 12	S540MTD-12	PT375	PT3752	PT3751
5/32	protruding - 5	S540MTD-5P	TD165P	PW3652P	TD1651
3/16	protruding - 6	S540MTD-6P	TD200P	PW3002P	TD2001
1/4	protruding - 8	S540MTD-8P	TD260P	PW3602P	TD2601
5/16	protruding - 10	S540MTD-10P	TD312P	PW3122P	TD3121
3/8	protruding - 12	S540MTD-12P	PT375P	PW3752P	PT3751
5/32	millable - 5	S540MTD-5A	TD165A	PW3652A	TD1651
3/16	millable - 6	S540MTD-6A	TD200A	PW3002A	TD2001
1/4	millable - 8	S540MTD-8A	TD260A	PW3602A	TD2601
5/32	reduced flush - 5	S540MTD-5T	TD165T	PW3652T	TD1651
3/16	reduced flush - 6	S540MTD-6T	TD200T	PW3002T	TD2001
1/4	reduced flush - 8	S540MTD-8T	TD260T	PW3602T	TD2601
5/16	reduced flush - 10	S540MTD-10T	TD312T	PW3122T	TD3121
3/8	reduced flush - 12	S540MTD-12T	PT375T	PT3752T	PT3751

* Driver Adapter contains both the Nose and Driver

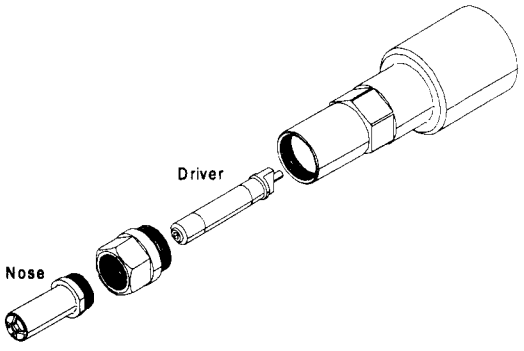

Technical Data	
Operating Preasure	90 PSI
Torque Output	32.5 lbs
Stall Torque	32.5 lbs
Motor Speed	540 rpm
Air Consumption (at free speed)	28 cfm
Horse Power Rating	0.7
Weight	3.5lb

Visu-Lok

Blind Fastener Tools

Pneumatic Drill-Out

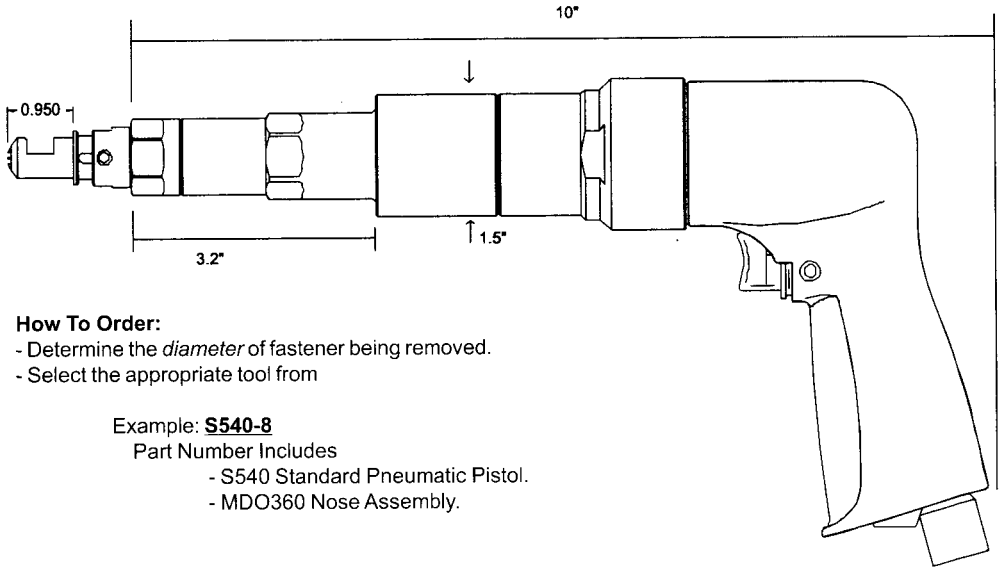

How To Order:
- Determine the *diameter* of fastener being removed.
- Select the appropriate tool from

Example: **S540-8**
Part Number Includes
- S540 Standard Pneumatic Pistol.
- MDO360 Nose Assembly.

Dia	Visu-Lok Series	Complete Assy	Drill-Out Assy	Nose	Drill
5/32	flush - 5	S540-5	MDO365	DO1652	DO1655-5
3/16	flush - 6	S540-6	MDO300	DO2002	DO1655-6
1/4	flush - 8	S540-8	MDO360	DO2602	DO1655-8
5/16	flush - 10	S540-10	MDO312	DO3122	DO1655-10
3/8	flush - 12	S540-12	MDO375	DO3752	DO1655-12
5/32	protruding - 5	S540-5P	MDO365P	DO1652P	DO1655-5
3/16	protruding - 6	S540-6P	MDO300P	DO2002P	DO1655-6
1/4	protruding - 8	S540-8P	MDO360P	DO2602P	DO1655-8
5/16	protruding - 10	S540-10P	MDO312P	DO3122P	DO1655-10
3/8	protruding - 12	S540-12P	MDO375P	DO3752P	DO1655-12
5/32	millable - 5	S540-5A	MDO365A	DO1652A	DO1655-5
3/16	millable - 6	S540-6A	MDO300A	DO2002A	DO1655-6
1/4	millable - 8	S540-8A	MDO360A	DO2602A	DO1655-8
5/32	reduced flush - 5	S540-5T	MDO365T	DO1652T	DO1655-5
3/16	reduced flush - 6	S540-6T	MDO300T	DO2002T	DO1655-6
1/4	reduced flush - 8	S540-8T	MDO360T	DO2602T	DO1655-8
5/16	reduced flush - 10	S540-10T	MDO312T	DO3122T	DO1655-10
3/8	reduced flush - 12	S540-12T	MDO375T	DO3752T	DO1655-12

*Drill out Assembly contains both the Nose and Driver

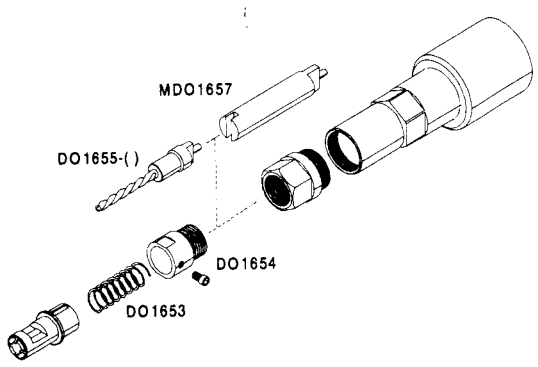

Technical Data	
Operating Preasure	90 PSI
Torque Output	32.5 lbs
Stall Torque	32.5 lbs
Motor Speed	540 rpm
Air Consumption (at free speed)	28 cfm
Horse Power Rating	0.7
Weight	3.5lb

Visu-Lok
Blind Fastener Tools

Torque Responsive Adapter

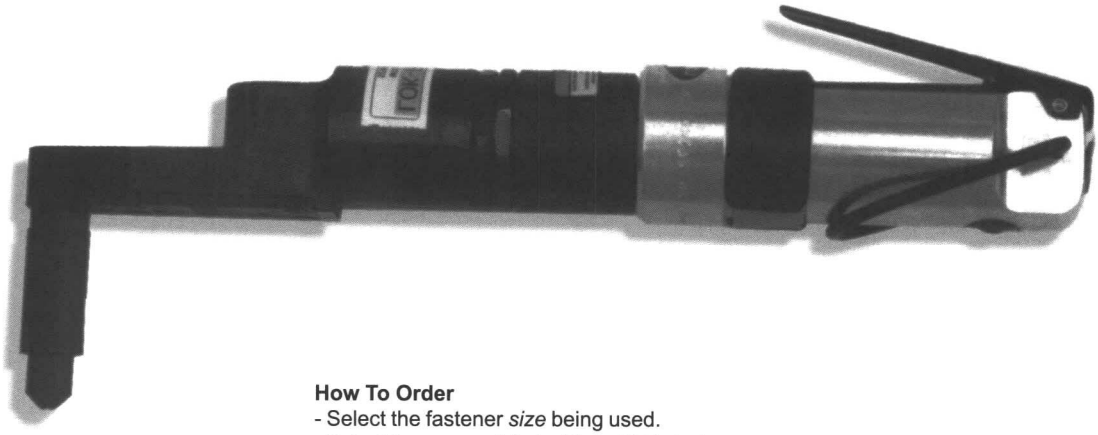

How To Order
- Select the fastener *size* being used.
- Select the appropriate tool from Table below

Example: **7440M-6**
Part Number Includes
- 7440M Pneumatic Right Angle Motor.
- PT400 Driver Assembly.

Dia.	Visu-Lok Series	Pneumatic Assembly	Driver Assy	Nose	Driver
5/32	flush - 5	7440M-5	PT465	PT4652	PT4651
3/16	flush - 6	7440M-6	PT400	PT4002	PT4001
1/4	flush - 8	7440M-8	PT460	PT4602	PT4601
5/32	protruding - 5	7440M-5P	PT465P	PT4652P	PT4651
3/16	protruding - 6	7440M-6P	PT400P	PT4002P	PT4001
1/4	protruding - 8	7440M-8P	PT460P	PT4602P	PT4601
5/32	millable - 5	7440M-5A	PT465A	PT4652A	PT4651
3/16	millable - 6	7440M-6A	PT400A	PT4002A	PT4001
1/4	millable - 8	7440M-8A	PT460A	PT4602A	PT4601
5/32	reduced flush - 5	7440M-5T	PT465T	PT4652T	PT4651
3/16	reduced flush - 6	7440M-6T	PT400T	PT4002T	PT4001
1/4	reduced flush - 8	7440M-8T	PT460T	PT4602T	PT4601

*Driver Assembly contains both the Nose and Driver

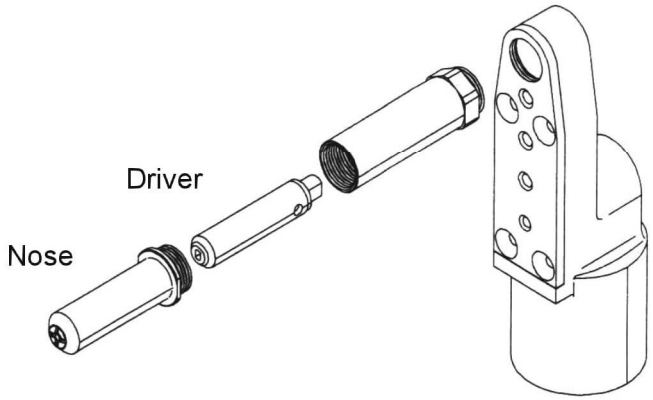

Technical Data	
Operating Preasure	90 PSI
Torque Output	108 in lbs
Stall Torque	10 ft lbs
Motor Speed	500 rpm
Air Consumption (at free speed)	18 cfm
Horse Power Rating	0.33
Weight	3.5lb

Visu-Lok

Blind Fastener Tools

Standard Assembly

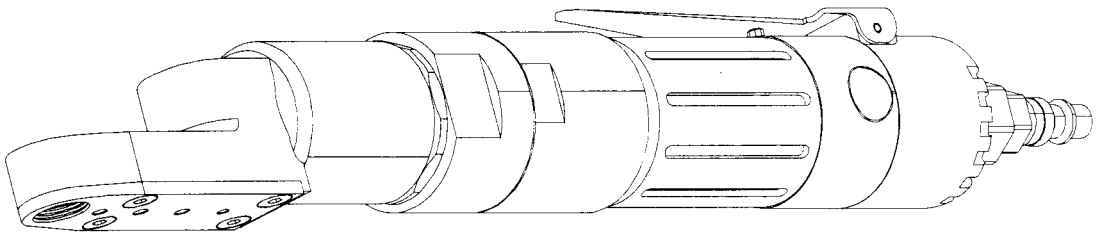

How To Order

- Select the fastener *size* being used.
- Select the appropriate tool from Table below

Example: **7440-5**

Part Number Includes

- 7440 Pneumatic Right Angle Motor.
- PW465 Driver Assembly.

Dia.	Visu-Lok Series	Pneumatic Driver	Driver Assy	Nose	Driver
5/32	flush - 5	7440-5	PW465	PW3652	PW4651
3/16	flush - 6	7440-6	PW400	PW3002	PW4001
1/4	flush - 8	7440-8	PW460	PW3602	PW4601
5/32	protruding - 5	7440-5P	PW465P	PW3652P	PW4651
3/16	protruding - 6	7440-6P	PW400P	PW3002P	PW4001
1/4	protruding - 8	7440-8P	PW460P	PW3602P	PW4601
5/32	millable - 5	7440-5A	PW465A	PW3652A	PW4651
3/16	millable - 6	7440-6A	PW400A	PW3002A	PW4001
1/4	millable - 8	7440-8A	PW460A	PW3602A	PW4601
5/32	reduced flush - 5	7440-5T	PW465T	PW3652T	PW4651
3/16	reduced flush - 6	7440-6T	PW400T	PW3002T	PW4001
1/4	reduced flush - 8	7440-8T	PW460T	PW3602T	PW4601

*Driver Assembly contains both the Nose and Driver

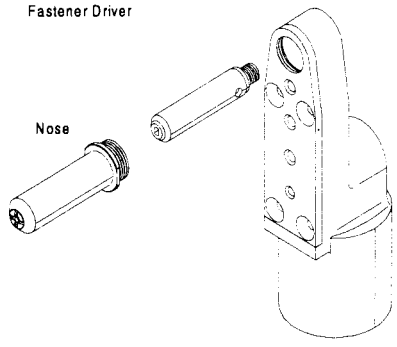

Technical Data	
Operating Preasure	90 PSI
Torque Output	108 in lbs
Stall Torque	10 ft lbs
Motor Speed	500 rpm
Air Consumption (at free speed)	18 cfm
Horse Power Rating	0.33
Weight	3.5lb

Visu-Lok

Blind Fastener Tools

Pneumatic Close Quarter

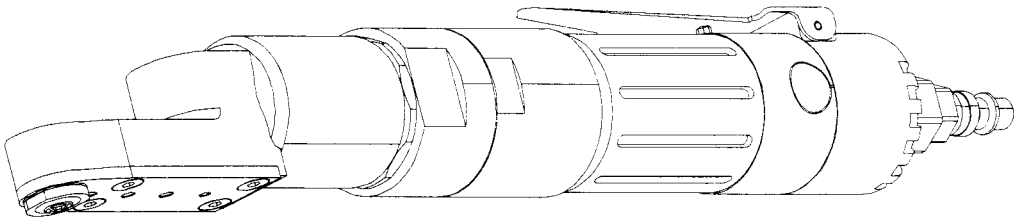

How To Order

- Select the fastener *size* being used.
- Select the appropriate tool from Table below

Example: **7440C-5**

Part Number Includes

- 7440C Pneumatic Right Angle Close Quarters Motor.
- 41165 Nose Tip.
- RW5-1 Drive Gear.

Dia.	Visu-Lok Series	Pneumatic Driver	Drive Gear	Nose Tip
5/32	flush - 5	7440C-5	RW5-1	41165
3/16	flush - 6	7440C-6	RW6-1	41200
1/4	flush - 8	7440C-8	RW8-1	41260
5/32	protruding - 5	7440C-5P	RW5-1	41165P
3/16	protruding - 6	7440C-6P	RW6-1	41200P
1/4	protruding - 8	7440C-8P	RW8-1	41260P
5/32	millable - 5	7440C-5A	RW5-1	41165A
3/16	millable - 6	7440C-6A	RW6-1	41200A
1/4	millable - 8	7440C-8A	RW8-1	41260A
5/32	reduced flush - 5	7440C-5T	RW5-1	41165T
3/16	reduced flush - 6	7440C-6T	RW6-1	41200T
1/4	reduced flush - 8	7440C-8T	RW8-1	41260T

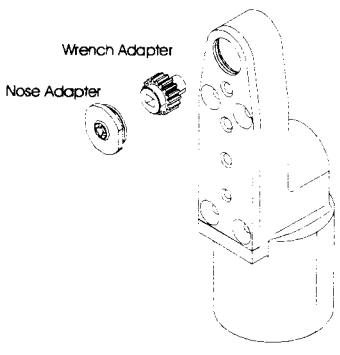

Technical Data	
Operating Preasure	90 PSI
Torque Output	108 in lbs
Stall Torque	10 ft lbs
Motor Speed	500 rpm
Air Consumption (at free speed)	18 cfm
Horse Power Rating	0.33
Weight	3.5lb

Visu-Lok
Blind Fastener Tools

Ratchet Hand Tool

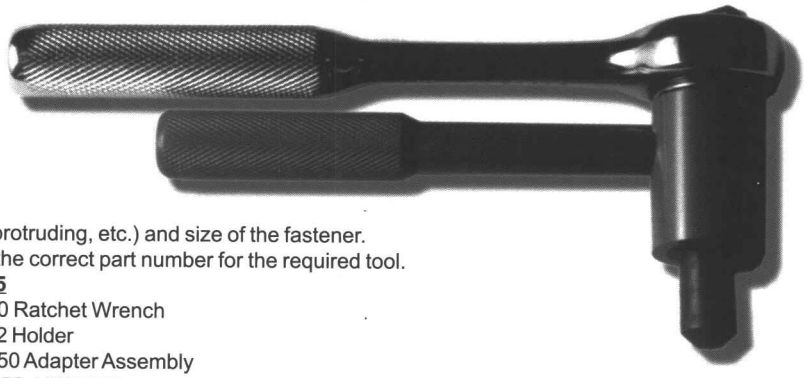

How To Order:
- Determine the type (flush, protruding, etc.) and size of the fastener.
- Refer to the table to select the correct part number for the required tool.

Example: **HWF165**
- HW300 Ratchet Wrench
- HW202 Holder
- HW1650 Adapter Assembly (HW1652, HW1651)

Dia.	Visu-Lok Series	Complete Assembly	Driver Assembly	Nose	Wrench Driver
5/32	flush - 5	HWF165	HW1650	HW1652	HW1651
3/16	flush - 6	HWF200	HW2000	HW2002	HW2001
1/4	flush - 8	HWF260	HW2600	HW2602	HW2601
5/16	flush - 10	HWF312	HW3120	HW3122	HW3121
3/8	flush - 12	HWF375	HW3750	HW3752	HW3751
5/32	protruding - 5	HWP165	HW1650P	HW1652P	HW1651
3/16	protruding - 6	HWP200	HW2000P	HW2002P	HW2001
1/4	protruding - 8	HWP260	HW2600P	HW2602P	HW2601
5/16	protruding - 10	HWP312	HW3120P	HW3122P	HW3121
3/8	protruding - 12	HWP375	HW3750P	HW3752P	HW375
5/32	millable - 5	HWA165	HW1650A	HW1652A	HW1651
3/16	millable - 6	HWA200	HW2000A	HW2002A	HW2001
1/4	millable - 8	HWA260	HW2600A	HW2602A	HW2601
5/32	reduced flush - 5	HWT165	HW1650T	HW1652T	HW1651
3/16	reduced flush - 6	HWT200	HW2000T	HW2002T	HW2001
1/4	reduced flush - 8	HWT260	HW2600T	HW2602T	HW2601
5/16	reduced flush - 10	HWT312	HW3120T	HW3122T	HW3121
3/8	reduced flush - 12	HWT375	HW3750T	HW3752T	HW3751

*Driver Assembly contains both the Nose and Driver

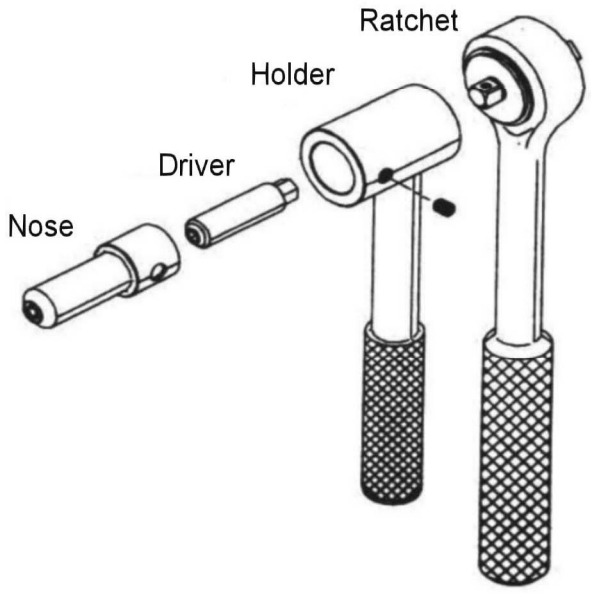

Visu-Lok
Blind Fastener Tools

Close Quarter Hand Tool

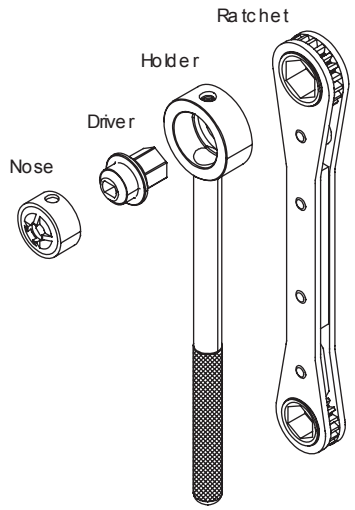

How To Order
- Select the fastener size.
- Refer to the table to select the correct part number for the tool.

Example: HWF5
Part Number Includes
- HW101 Ratchet Wrench
- HW102 Adapter Assembly
- HN5 Nose
- HW5 Drive

Dia.	Visu-Lok Series	Complete Assembly	Drive	Nose	Ratchet	Holder
5/32"	flush - 5	HWF5	HW5	HN5	HW101	HW102
3/16"	flush - 6	HWF6	HW6	HN6		
1/4"	flush - 8	HWF8	HW8	HN8		
5/16"	flush - 10	HWF10	HW10	HN10	HW401	HW402
3/8"	flush - 12	HWF12	HW12	HN12		
5/32"	protruding - 5	HWP5	HW5	HN5P	HW101	HW102
3/16"	protruding - 6	HWP6	HW6	HN6P		
1/4"	protruding - 8	HWP8	HW8	HN8P		
5/16"	protruding - 10	HWP10	HW10	HN10P	HW401	HW402
3/8"	protruding - 12	HWP12	HW12	HN12P		
5/32"	millable - 5	HWA5	HW5	HN5A	HW101	HW102
3/16"	millable - 6	HWA6	HW6	HN6A		
1/4"	millable - 8	HWA8	HW8	HN8A	HW401	HW402
5/32"	reduced flush - 5	HWT5	HW5	HN5T	HW101	HW102
3/16"	reduced flush - 6	HWT6	HW6	HN6T		
1/4"	reduced flush - 8	HWT8	HW8	HN8T		
5/16"	reduced flush - 10	HWT10	HW10	HN10T	HW401	HW402
3/8"	reduced flush - 12	HWT12	HW12	HN12T		

Visu-Lok

Blind Fastener Tools

Torque Adapter

How To Order:
- Select the fastener *size* being used.
- Select the appropriate tool part number from the table

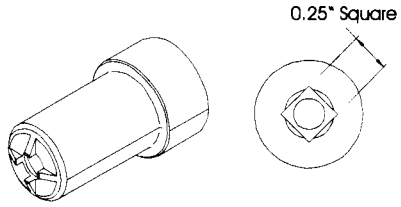

Dia.	Visu-Lok Series	Toque Adapter	Torque (in. lbs.)
5/32	flush - 5	TOR1652	4.00
3/16	flush - 6	TOR2002	6.00
1/4	flush - 8	TOR2602	10.00
5/16	flush - 10	TOR3122	20.00
3/8	flush - 12	TOR3752	30.00
5/32	protruding - 5	TOR1652P	4.00
3/16	protruding - 6	TOR2002P	6.00
1/4	protruding - 8	TOR2602P	10.00
5/16	protruding - 10	TOR3122P	20.00
3/8	protruding - 12	TOR3752P	30.00
5/32	millable - 5	TOR1652A	4.00
3/16	millable - 6	TOR2002A	6.00
1/4	millable - 8	TOR2602A	10.00
5/32	reduced flush - 5	TOR1652T	4.00
3/16	reduced flush - 6	TOR2002T	6.00
1/4	reduced flush - 8	TOR2602T	10.00
5/16	reduced flush - 10	TOR3122T	20.00
3/8	reduced flush - 12	TOR3752T	30.00

Hand Drill-Out

How To Order:
- Select the fastener *size* being used.
- Select the appropriate tool part number from the table



Dia.	Visu-Lok Series	Hand Drill Out	Drill Size
5/32	flush - 5	HDO1652	9/64
3/16	flush - 6	HDO2002	5/32
1/4	flush - 8	HDO2602	13/64
5/16	flush - 10	HDO3122	1/4
3/8	flush - 12	HDO3752	9/3
5/32	protruding - 5	HDO1652P	9/64
3/16	protruding - 6	HDO2002P	5/32
1/4	protruding - 8	HDO2602P	13/64
5/16	protruding - 10	HDO3122P	1/4
3/8	protruding - 12	HDO3752P	9/3
5/32	millable - 5	HDO1652A	9/64
3/16	millable - 6	HDO2002A	5/32
1/4	millable - 8	HDO2602A	13/64
5/32	reduced flush - 5	HDO1652T	9/64
3/16	reduced flush - 6	HDO2002T	5/32
1/4	reduced flush - 8	HDO2602T	13/64
5/16	reduced flush - 10	HDO3122T	1/4
3/8	reduced flush - 12	HDO3752T	9/3

Visu-Lok
Blind Fastener Tools

Visu-Lok
Break-Off Gauges

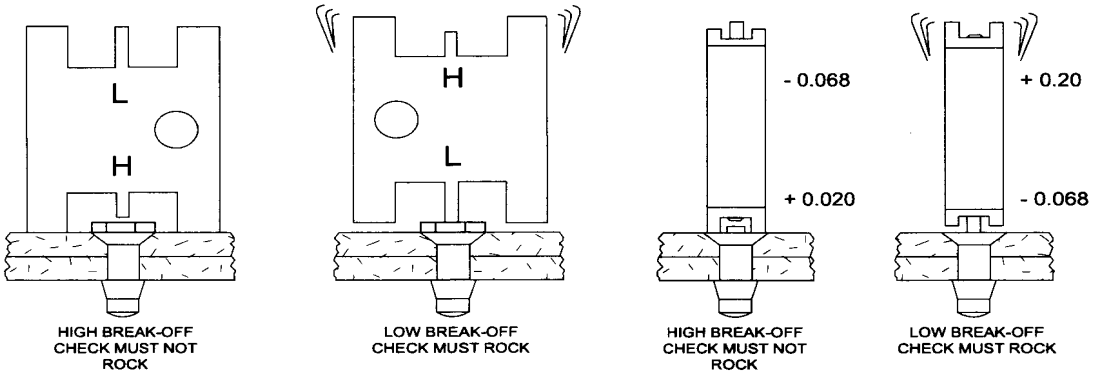

Visu-Lok Series	**Leaf Gauges**	Break-Off Limits
PLT210-5	**3P5**	+.088 / +.000
PLT210-6	**3P6**	+.098 / +.010
PLT210-8	**3P8**	+.135 / +.047
PLT210-10	**3P10**	+.146 / +.043
PLT210-12	**3P12**	+.152 / +.049
PLT110-5	**3F5**	+.020 / -.068
PLT110-6	**3F6**	+.015 / -.073
PLT110-8	**3F8**	+.010 / -.078
PLT110-10	**3F10**	+.010 / -.083
PLT110-12	**3F12**	+.010 / -.093
PLT220-5	**A3P5**	+.088 / +.000
PLT220-6	**A3P6**	+.103 / +.015
PLT220-8	**A3P8**	+.130 / +.032
PLT220-10	**A3P10**	+.130 / +.027
PLT220-12	**A3P12**	+.130 / +.027
PLT120-5	-	-
PLT120-6	-	-
PLT120-8	-	-
PLT120-10	-	-
PLT120-12	-	-
PLT130-5	**3P5**	+.088 / +.000
PLT130-6	**3P6**	+.098 / +.010
PLT130-8	**3P8**	+.098 / +.010
PLT230-5	**3P5**	+.088 / +.000
PLT230-6	**3PA6**	+.103 / +.015
PLT230-8	**3P8**	+.135 / +.047
PLT1058-5	-	-
PLT1058-6	-	-
PLT1058-8	-	-
PLT1058-10	-	-
PLT1058-12	-	-

Round Gauges	Break-Off Limits	Jo-Bolt Series
-	-	-
4P6	-.005 / -.103	P/PO 200
4P8	+.010 / -.088	P/PO 260
4P10	-.004 / -.117	P/PO 312
4P12	-.028 / -.141	P/PO 375
4F5	+.020 / -.068	-
4F6	+.015 / -.073	-
4F8	+.010 / -.078	-
4F10	+.010 / -.083	-
4F12	+.010 / -.093	-
-	-	-
-	-	-
-	-	-
-	-	-
-	-	-
A4F5-LS	+.082 / -.006	-
A4F6-LS	+.072 / -.016	-
A4F8-LS	+.072 / -.026	-
A4F10-LS	+.072 / -.031	-
A4F12-LS	+.072 / -.031	-
-	-	-
4FA6	+.025 / -.069	SHFA/FAO 200
4FA8	+.026 / -.069	SHFA/FAO 260
-	-	-
-	-	-
-	-	-
LF5-F5	+.088 / +.000	-
LF5-F5	+.088 / +.000	-
LF5-F8	+.098 / +.000	-
LF5-F10	+.103 / +.000	-
LF5-F10	+.103 / +.000	-

Visu-Lok
Blind Fastener Tools

Visu-Lok
Grip Scales

Grip Scale Part #: LFVLG-1

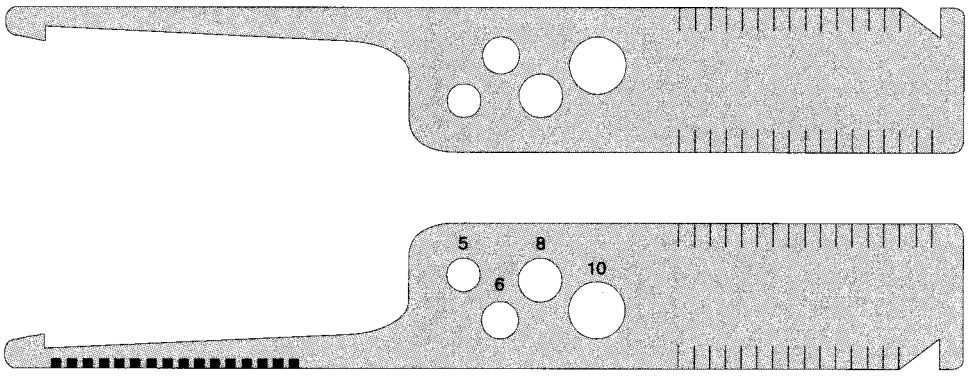

Selection of Grip Length

In measuring hole depth take reading where the skin surface meets the number or line on gauge. If directly on a line use either the indicated grip or the next longer grip.

In cases where there a tappered sheet condition exits, determine grip length at the hole centerline. The taper must not exceed 7° to ensure the proper performance of the fastener.

Composi-Lok
Blind Fastener Tools

Composi-Lok
Master Torque Driver

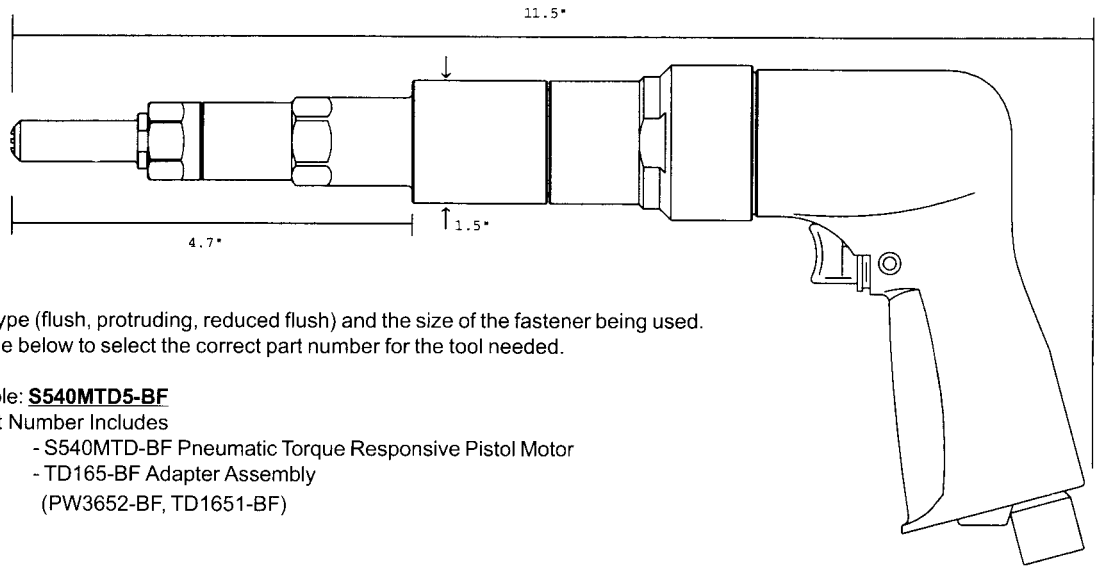

How To Order:
- Determine the type (flush, protruding, reduced flush) and the size of the fastener being used.
- Refer to the table below to select the correct part number for the tool needed.

Example: **S540MTD5-BF**
Part Number Includes
- S540MTD-BF Pneumatic Torque Responsive Pistol Motor
- TD165-BF Adapter Assembly
(PW3652-BF, TD1651-BF)

Dia.	Composi-Lok Series	Complete Assembly	Adapter Assembly	Driver	Nose
5/32	flush - 5	S540MTD5 - BF	TD165 - BF	TD1651 -BF	PW3652 - BF
3/16	flush - 6	S540MTD6 - BF	TD200 - BF	TD2001 - BF	PW3002 - BF
7/32	flush - 7	S540MTD7 - BF	TD220 - BF	TD7 - BF	PW7F - BF
1/4	flush - 8	S540MTD8 - BF	TD260 - BF	TD2601 - BF	PW3602 - BF
9/32	flush - 9	S540MTD9 - BF	PT280 - BF	PT9 - BF	PT9F - BF
5/16	flush - 10	S540MTD10 - BF	PT312 - BF	PT10 - BF	PT10F - BF
11/32	flush - 11	S540MTD11 - BF	PT340 - BF	PT11 - BF	PT11F - BF
3/8	flush - 12	S540MTD12 - BF	PT375 - BF	PT12 - BF	PT12F - BF
5/32	protruding - 5	S540MTD5P - BF	TD165P - BF	TD1651 -BF	PW3652P - BF
3/16	protruding - 6	S540MTD6P - BF	TD200P - BF	TD2001 - BF	PW3002P - BF
7/32	protruding - 7	S540MTD7P - BF	TD220P - BF	TD7 - BF	PW7P - BF
1/4	protruding - 8	S540MTD8P - BF	TD260P - BF	TD2601 - BF	PW3602P - BF
9/32	protruding - 9	S540MTD9P - BF	PT280P - BF	PT9 - BF	PT9P - BF
5/16	protruding - 10	S540MTD10P - BF	PT312P - BF	PT10 - BF	PT10P - BF
11/32	protruding - 11	S540MTD11P - BF	PT340P - BF	PT11 - BF	PT11P - BF
3/8	protruding - 12	S540MTD12P - BF	PT375P - BF	PT12 - BF	PT12P - BF
5/32	reduced flush - 5	S540MTD5T-BF	TD165T-BF	TD1651-BF	PW3652T-BF
3/16	reduced flush - 6	S540MTD6T-BF	TD200T-BF	TD2001-BF	PW3002T-BF
7/32	reduced flush - 7	S540MTD7T-BF	TD220T-BF	TD7-BF	PW7FT-BF
1/4	reduced flush - 8	S540MTD8T-BF	TD260T-BF	TD2601-BF	PW3602T-BF
9/32	reduced flush - 9	S540MTD9T-BF	PT280T-BF	PT9-BF	PT9FT-BF
5/16	reduced flush - 10	S540MTD10T-BF	PT312T-BF	PT10-BF	PT10FT-BF
11/32	reduced flush - 11	S540MTD11T-BF	PT340T-BF	PT11-BF	PT11FT-BF
3/8	reduced flush - 12	S540MTD12T-BF	PT375T-BF	PT12-BF	PT12FT-BF

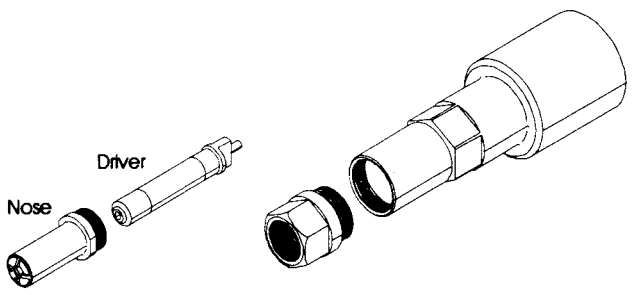

Technical Data	
Operating Preasure	90 PSI
Torque Output	32.5 lbs
Stall Torque	32.5 lbs
Motor Speed	540 rpm
Air Consumption (at free speed)	28 cfm
Horse Power Rating	0.7
Weight	3.5lb

Composi-Lok
Blind Fastener Tools

Composi-Lok
Right Angle Master Torque Driver



How To Order:
- Determine the type (flush, protruding, reduced flush) and the size of the fastener being used.
- Refer to the table below to select the correct part number for the tool needed.

Example: **7440M5-BF**
Part Number Includes
- 7440M Torque Responsive Pneumatic Wrench Motor
- TD565-BF Adapter Assembly
(TD5652-BF, TD5651-BF)

Dia.	Composi-Lok Series	Complete Assembly	Adapter Assembly	Wrench Driver	Nose Adapter
5/32	flush - 5	7440M5 - BF	TD565 - BF	TD5651 - BF	TD5652 - BF
3/16	flush - 6	7440M6 - BF	TD500 - BF	TD5001 - BF	TD5002 - BF
7/32	flush - 7	7440M7 - BF	TD520 - BF	TD5201 - BF	TD5202 - BF
1/4	flush - 8	7440M8 - BF	TD560 - BF	TD5601 - BF	TD5602 - BF
5/32	protruding - 5	7440M5P - BF	TD565P - BF	TD5651 - BF	TD5652P - BF
3/16	protruding - 6	7440M6P - BF	TD500P - BF	TD5001 - BF	TD5002P - BF
7/32	protruding - 7	7440M7P - BF	TD520P - BF	TD5201 - BF	TD5202P - BF
1/4	protruding - 8	7440M8P - BF	TD560P - BF	TD5601 - BF	TD5602P - BF
5/32	reduced flush - 5	7440M5T - BF	TD565T-BF	TD5651-BF	TD5652T-BF
3/16	reduced flush - 6	7440M6T - BF	TD500T-BF	TD5001-BF	TD5002T-BF
7/32	reduced flush - 7	7440M7T - BF	TD520T-BF	TD5201-BF	TD5202T-BF
1/4	reduced flush - 8	7440M8T - BF	TD560T-BF	TD5601-BF	TD5602T-BF

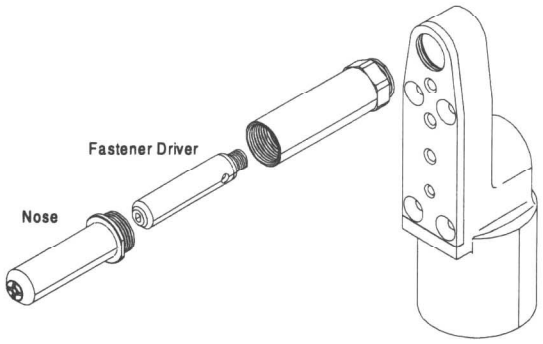

Technical Data	
Operating Preasure	90 PSI
Torque Output	108 in lbs
Stall Torque	10 ft lbs
Motor Speed	500 rpm
Air Consumption (at free speed)	18 cfm
Horse Power Rating	0.33
Weight	3.5lb

Composi-Lok
Blind Fastener Tools

Composi-Lok
Right Angle Close Quarter

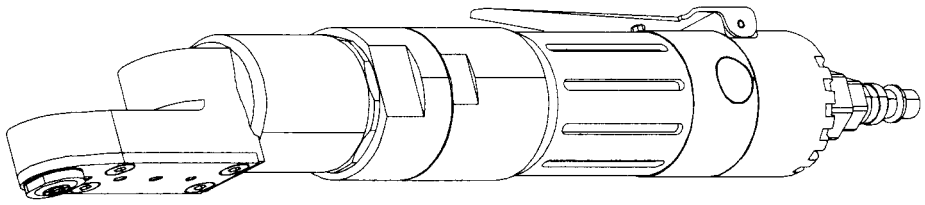

How To Order:
- Determine the type (flush, protruding, reduced flush) and the size of the fastener being used.
- Refer to the table below to select the correct part number for the tool needed.

Example: **7440C5-BF**
Part Number Includes
- 7440C Close Quarters Pneumatic Motor
- 41165-BF Nose Adapter
- RW5-1-BF Wrench Adapter

Dia.	Composi-Lok Series	Complete Assembly	Drive Gear	Nose
5/32	flush - 5	7440C5 - BF	RW5-1-BF	41165 - BF
3/16	flush - 6	7440C6 - BF	RW6-1-BF	41200 - BF
7/32	flush - 7	7440C7 - BF	RW7-1-BF	41220 - BF
1/4	flush - 8	7440C8 - BF	RW8-1-BF	41260 - BF
5/32	protruding - 5	7440C5P - BF	RW5-1-BF	41165P - BF
3/16	protruding - 6	7440C6P - BF	RW6-1-BF	41200P - BF
7/32	protruding - 7	7440C7P - BF	RW7-1-BF	41220P - BF
1/4	protruding - 8	7440C8P - BF	RW8-1-BF	41260P - BF
5/32	reduced flush - 5	7440C5T - BF	RW5-1-BF	41165T-BF
3/16	reduced flush - 6	7440C6T - BF	RW6-1-BF	41200T-BF
7/32	reduced flush - 7	7440C7T - BF	RW7-1-BF	41220T-BF
1/4	reduced flush - 8	7440C8T - BF	RW8-1-BF	41260T-BF

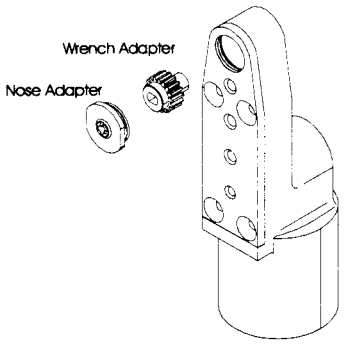

Technical Data	
Operating Preasure	90 PSI
Torque Output	108 in lbs
Stall Torque	10 ft lbs
Motor Speed	500 rpm
Air Consumption (at free speed)	18 cfm
Horse Power Rating	0.33
Weight	3.5lb

Composi-Lok
Blind Fastener Tools

Composi-Lok
Ratchet Hand Tool

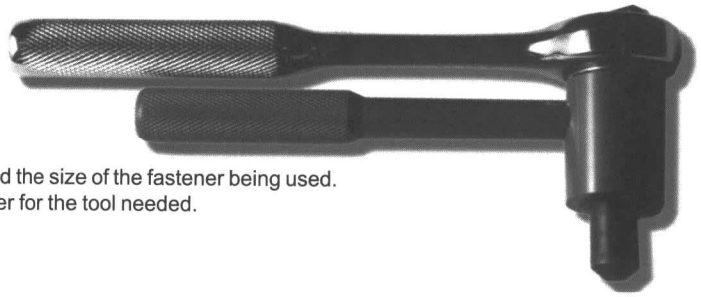

How To Order:
- Determine the type (flush, protruding, reduced flush) and the size of the fastener being used.
- Refer to the table below to select the correct part number for the tool needed.

Example: **HW165-BF**
Part Number Includes
- HW300 Ratchet Wrench
- HW202 Handle
- HW1650-BF Adapter Assembly (HW1652-BF, HW1651-BF)

Dia.	Composi-Lok Series	Complete Assembly	Adapter Assembly	Wrench Adapter	Nose Adapter
5/32	flush - 5	HWF165 - BF	HW1650 - BF	HW1651 - BF	HW1652 - BF
3/16	flush - 6	HWF200 - BF	HW2000 - BF	HW2001 - BF	HW2002 - BF
7/32	flush - 7	HWF220 - BF	HW2200 - BF	HW2201 - BF	HW2202 - BF
1/4	flush - 8	HWF260 - BF	HW2600 - BF	HW2601 - BF	HW2602 - BF
9/32	flush - 9	HWF280 - BF	HW2800 - BF	HW2801 - BF	HW2802 - BF
5/16	flush - 10	HWF312 - BF	HW3120 - BF	HW3121 - BF	HW3122 - BF
11/32	flush - 11	HWF340 - BF	HW3400 - BF	HW3401 - BF	HW3402 - BF
3/8	flush - 12	HWF375 - BF	HW3750 - BF	HW3751 - BF	HW3752 - BF
5/32	protruding - 5	HWP165 - BF	HW1650P - BF	HW1651 - BF	HW1652P - BF
3/16	protruding - 6	HWP200 - BF	HW2000P - BF	HW2001 - BF	HW2002P - BF
7/32	protruding - 7	HWP220 - BF	HW2200P - BF	HW2201 - BF	HW2202P - BF
1/4	protruding - 8	HWP260 - BF	HW2600P - BF	HW2601 - BF	HW2602P - BF
9/32	protruding - 9	HWP280 - BF	HW2800P - BF	HW2801 - BF	HW2802P - BF
5/16	protruding - 10	HWP312 - BF	HW3120P - BF	HW3121 - BF	HW3122P - BF
11/32	protruding - 11	HWP340 - BF	HW3400P - BF	HW3401 - BF	HW3402P - BF
3/8	protruding - 12	HWP375 - BF	HW3750P - BF	HW3751 - BF	HW3752P - BF
5/32	reduced flush - 5	HWT165-BF	HW1650T-BF	HW1651-BF	HW1652T-BF
3/16	reduced flush - 6	HWT200-BF	HW2000T-BF	HW2001-BF	HW2002T-BF
7/32	reduced flush - 7	HWT220-BF	HW2200T-BF	HW2201-BF	HW2202T-BF
1/4	reduced flush - 8	HWT260-BF	HW2600T-BF	HW2601-BF	HW2602T-BF
9/32	reduced flush - 9	HWT280-BF	HW2800T-BF	HW2801-BF	HW2802T-BF
5/16	reduced flush - 10	HWT312-BF	HW3120T-BF	HW3121-BF	HW3122T-BF
11/32	reduced flush - 11	HWT340-BF	HW3400T-BF	HW3401-BF	HW3402T-BF
3/8	reduced flush - 12	HWT375-BF	HW3750T-BF	HW3751-BF	HW3752T-BF

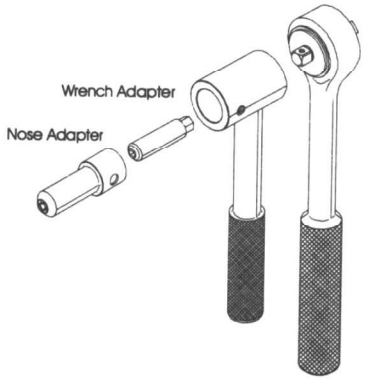

Composi-Lok
Blind Fastener Tools

Composi-Lok
Close Quarter Hand Tool

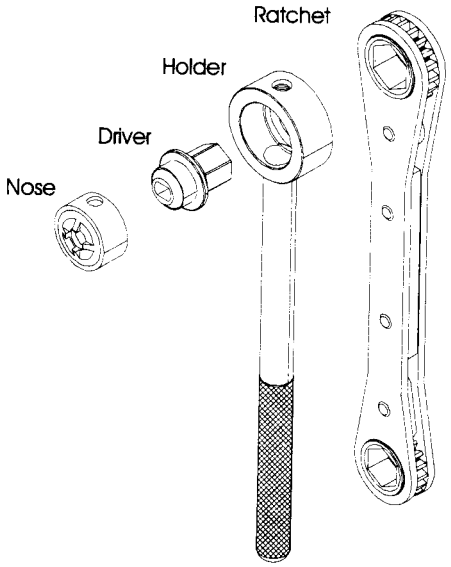

How To Order:
- Determine the type (flush, protruding, reduced flush) and the size of the fastener being used.
- Refer to the table below to select the correct part number for the tool needed.

Example: **HW5-BF**
Part Number Includes
- HW401 Ratchet
- HW402 Holder
- HN5-BF Nose Adapter
- HW5-BF Wrench Adapter

Dia.	Composi-Lok Series	Complete Assembly	Driver	Nose	Ratchet	Holder
5/32	flush - 5	HWF5 - BF	HW5 - BF	HN5 - BF	HW101	HW102
3/16	flush - 6	HWF6 - BF	HW6 - BF	HN6 - BF		
7/32	flsuh - 7	HWF7 - BF	HW7 - BF	HN7 - BF	HW401	HW402
1/4	flush - 8	HWF8 - BF	HW8 - BF	HN8 - BF		
9/32	flush - 9	HWF9 - BF	HW9 - BF	HN9 - BF		
5/16	flush - 10	HWF10 - BF	HW10 - BF	HN10 - BF		
11/32	flush - 11	HWF11 - BF	HW11 - BF	HN11 - BF		
3/8	flush - 12	HWF12 - BF	HW12 - BF	HN12 - BF		
5/32	protruding - 5	HWP5 - BF	HW5 - BF	HN5P - BF	HW101	HW102
3/16	protruding - 6	HWP6 - BF	HW6 - BF	HN6P - BF		
7/32	protruding - 7	HWP7 - BF	HW7 - BF	HN7P - BF	HW401	HW402
1/4	protruding - 8	HWP8 - BF	HW8 - BF	HN8P - BF		
9/32	protruding - 9	HWP9 - BF	HW9 - BF	HN9P - BF		
5/16	protruding - 10	HWP10 - BF	HW10 - BF	HN10P - BF		
11/32	protruding - 11	HWP11 - BF	HW11 - BF	HN11P - BF		
3/8	protruding - 12	HWP12 - BF	HW12 - BF	HN12P - BF		
5/32	reduced flush - 5	HWT5-BF	HW5-BF	HN5T-BF	HW101	HW102
3/16	reduced flush - 6	HWT6-BF	HW6-BF	HN6T-BF		
7/32	reduced flsuh - 7	HWT7-BF	HW7-BF	HN7T-BF	HW401	HW402
1/4	reduced flush - 8	HWT8-BF	HW8-BF	HN8T-BF		
9/32	reduced flush - 9	HWT9-BF	HW9-BF	HN9T-BF		
5/16	reduced flush - 10	HWT10-BF	HW10-BF	HN10T-BF		
11/32	reduced flush - 11	HWT11-BF	HW11-BF	HN11T-BF		
3/8	reduced flush - 12	HWT12-BF	HW12-BF	HN12T-B		

Composi-Lok
Blind Fastener Tools

Composi-Lok
Hand Torque Adapter

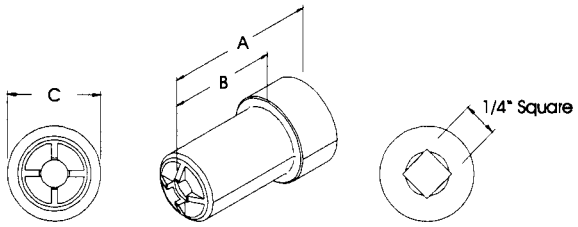

Dia.	Composi-Lok Series	Torque Adapter	Torque (in lbs)
5/32	flush - 05	TOR1652-BF	4.00
3/16	flush - 06	TOR2002-BF	6.00
7/32	flush - 07	TOR2202-BF	Contact Fastener Mfg.
1/4	flush - 08	TOR2602-BF	10.00
9/32	flush - 09	TOR2802-BF	Contact Fastener Mfg.
5/16	flush - 10	TOR3122-BF	20.00
11/32	flush - 11	TOR3402-BF	Contact Fastener Mfg.
3/8	flush - 12	TOR3702-BF	30.0
5/32	protruding - 05	TOR1652P - BF	4.00
3/16	protruding - 06	TOR2002P - BF	6.00
7/32	protruding - 07	TOR2202P - BF	Contact Fastener Mfg.
1/4	protruding - 08	TOR2602P - BF	10.00
9/32	protruding - 09	TOR2802P - BF	Contact Fastener Mfg.
5/16	protruding - 10	TOR3122P - BF	20.00
11/32	protruding - 11	TOR3402P - BF	Contact Fastener Mfg.
3/8	protruding - 12	TOR3702P - BF	30.0
5/32	reduced flush - 05	TOR1652T-BF	4.00
3/16	reduced flush - 06	TOR2002T-BF	6.00
7/32	reduced flush - 07	TOR2202T-BF	Contact Fastener Mfg.
1/4	reduced flush - 08	TOR2602T-BF	10.00
9/32	reduced flush - 09	TOR2802T-BF	Contact Fastener Mfg.
5/16	reduced flush - 10	TOR3122T-BF	20.00
11/32	reduced flush - 11	TOR3402T-BF	Contact Fastener Mfg.
3/8	reduced flush - 12	TOR3702T-BF	30.0

Composi-Lok
Hand Drill-Out

How To Order:
- Select the fastener *type* (flush, protruding, reduced flush) and *size* being used.
- Select the appropriate tool part number from the table

Nose Adapter



Dia.	Visu-Lok Series	Hand Drill Out	Drill Size
5/32	flush - 5	HDO1652	9/64
3/16	flush - 6	HDO2002	5/32
1/4	flush - 8	HDO2602	13/64
5/16	flush - 10	HDO3122	1/4
3/8	flush - 12	HDO3752	9/32
5/32	protruding - 5	HDO1652P	9/64
3/16	protruding - 6	HDO2002P	5/32
1/4	protruding - 8	HDO2602P	13/64
5/16	protruding - 10	HDO3122P	1/4
3/8	protruding - 12	HDO3752P	9/32
5/32	reduced flush - 5	HDO1652	9/64
3/16	reduced flush - 6	HDO2002	5/32
1/4	reduced flush - 8	HDO2602	13/64
5/16	reduced flush - 10	HDO3122	1/4
3/8	reduced flush - 12	HDO3752	9/32

Composi-Lok
Blind Fastener Tools

Composi-Lok
Break-Off Gauges

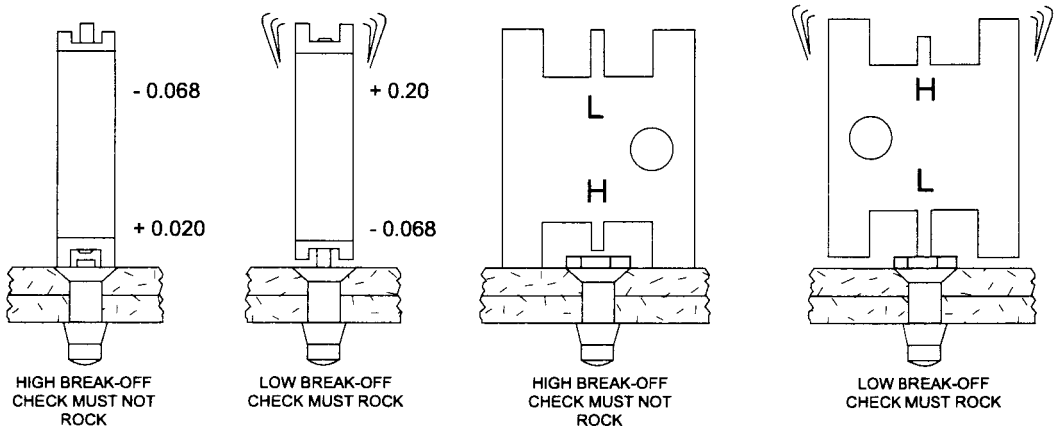

Dia	Composi-Lok Series	Leaf Gauges	Round Gauges	Break-Off Limits
5/32	MBF2010-05	LFP7-CL	LF8-F5	+.103 / +.000
5/32	MBF2011-05	LFP7-CL	LF8-F5	+.103 / +.000
5/32	MBF2012-05	LFP7-CL	LF8-F5	+.103 / +.000
5/32	MBF2013-05	LFP7-CL	LF8-F5	+.103 / +.000
3/16	MBF2010-06	LFP7-CL	LF8-F6	+.103 / +.000
3/16	MBF2011-06	LFP7-CL	LF8-F6	+.103 / +.000
3/16	MBF2012-06	LFP7-CL	LF8-F6	+.103 / +.000
3/16	MBF2013-06	LFP7-CL	LF8-F6	+.103 / +.000
7/32	MBF2010-07	LFP7-CL	LF8-F7	+.103 / +.000
7/32	MBF2011-07	LFP7-CL	LF8-F7	+.103 / +.000
7/32	MBF2012-07	LFP7-CL	LF8-F7	+.103 / +.000
7/32	MBF2013-07	LFP7-CL	LF8-F7	+.103 / +.000
1/4	MBF2010-08	LFP7-CL	LF8-F8	+.103 / +.000
1/4	MBF2011-08	LFP7-CL	LF8-F8	+.103 / +.000
1/4	MBF2012-08	LFP7-CL	LF8-F8	+.103 / +.000
1/4	MBF2013-08	LFP7-CL	LF8-F8	+.103 / +.000
9/32	MBF2010-09	LFP7-CL	LF8-F9	+.103 / +.000
9/32	MBF2011-09	LFP7-CL	LF8-F9	+.103 / +.000
9/32	MBF2012-09	LFP7-CL	LF8-F9	+.103 / +.000
9/32	MBF2013-09	LFP7-CL	LF8-F9	+.103 / +.000
5/16	MBF2010-10	LFP7-CL	LF8-F10	+.103 / +.000
5/16	MBF2011-10	LFP7-CL	LF8-F10	+.103 / +.000
5/16	MBF2012-10	LFP7-CL	LF8-F10	+.103 / +.000
5/16	MBF2013-10	LFP7-CL	LF8-F10	+.103 / +.000
11/32	MBF2010-11	LFP7-CL	LF8-F11	+.103 / +.000
11/32	MBF2011-11	LFP7-CL	LF8-F11	+.103 / +.000
11/32	MBF2012-11	LFP7-CL	LF8-F11	+.103 / +.000
11/32	MBF2013-11	LFP7-CL	LF8-F11	+.103 / +.000
3/8	MBF2010-12	LFP7-CL	LF8-F12	+.103 / +.000
3/8	MBF2011-12	LFP7-CL	LF8-F12	+.103 / +.000
3/8	MBF2012-12	LFP7-CL	LF8-F12	+.103 / +.000
3/8	MBF2013-12	LFP7-CL	LF8-F12	+.103 / +.000

Composi-Lok
Blind Fastener Tools

Composi-Lok
Grip Scales

Grip Scale Part #: LFCLG-1 & LFCLG-2

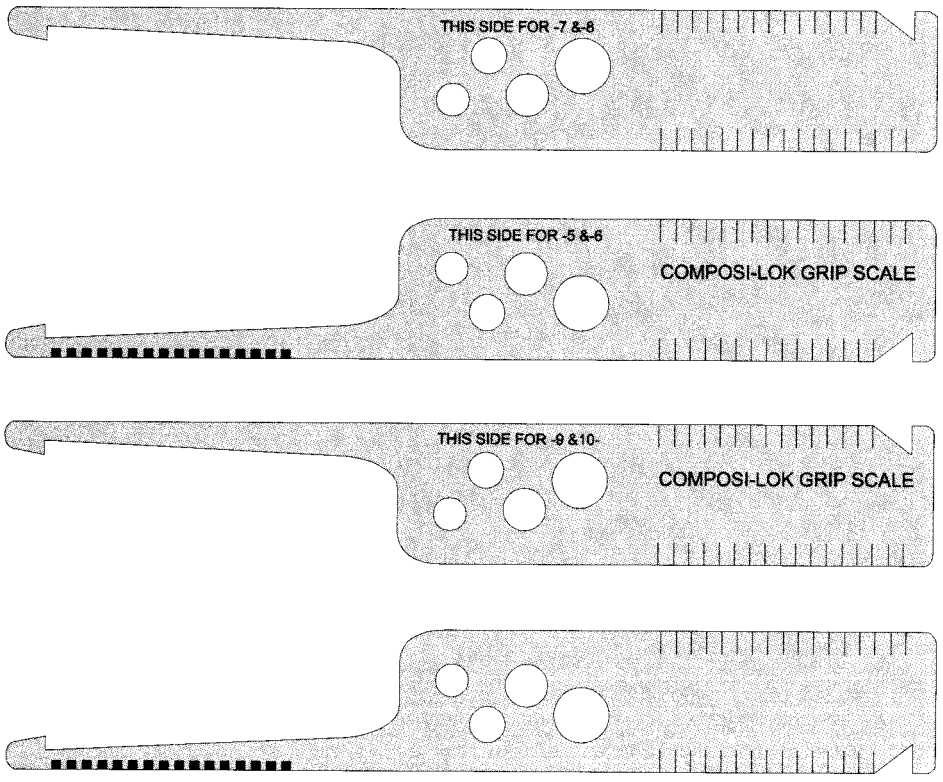

Selection of Grip Length

In measuring hole depth take reading where the skin surface meets the number or line on gauge. If directly on a line use either the indicated grip or the next longer grip.

In cases where there a tappered sheet condition exits, determine grip length at the hole centerline. The taper must not exceed 7° to ensure the proper performance of the fastener.

Visu-Lok II

Blind Fastener Tools

Universal Nose Tip™ System for Installing Drive-Nut Type Fasteners

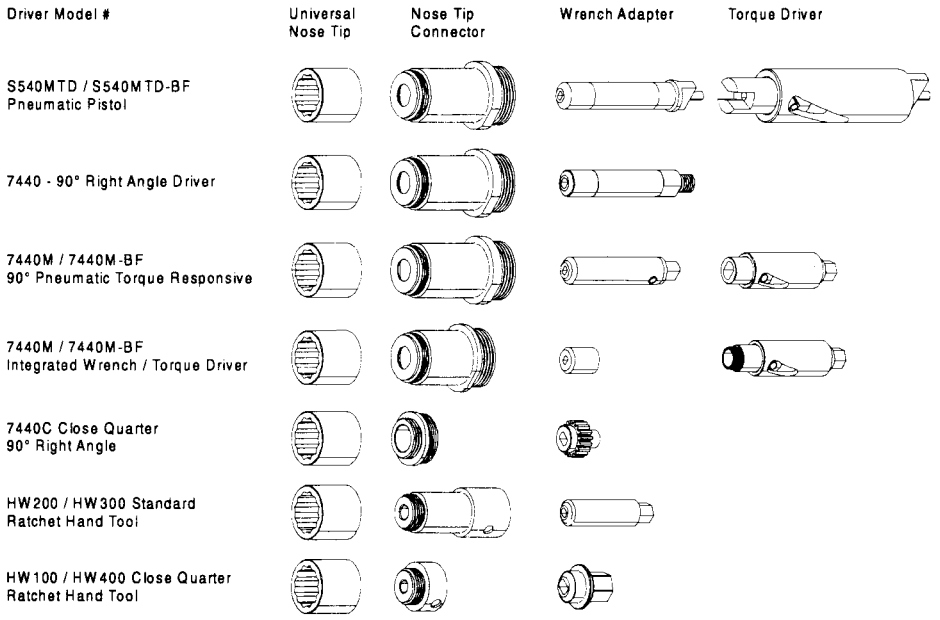

Universal Interchangeable Nose Tips

Installation tools have been simplified in the "DRIVE NUT" fastener system in both Visu-Lok II® and Composi-Lok II®.

LOK-FAST has further simplified the tooling with UNIVERSAL NOSE TIP™. Now, for a given size range any nose tip may be interchangeable with any driver.

An installation tool consists of a driver and an adapter assembly. The adapter assembly is comprised of a nose adapter to engage the corebolt through rotation to clamp-up and break-off. In most cases, for a given driver, the LOK-FAST UNIVERSAL NOSE TIP™ SYSTEM uses only three complete nose adapters for all the fastener head styles, and for the complete range of sizes from 5/32" to 3/8".

Two Part Nose Adapter

The nose adapter is now a two piece design consisting of the Universal Nose Tip™ and the Nose Tip Connector™. The nose tip engages the fastener drivenut, and the nose tip is threaded onto the connector to form a complete installation tool. The two piece design allows interchanging of the nose tips among all driver configurations and further allows interchangeability between Visu-Lok II® and Composi-Lok II® installation tools. The nose tip may be removed with a standard allen wrench using clockwise rotation.

The pictorial chart on the proceeding page is an illustration of the Universal Nose Tip™ System.

Universal Nose Tip™ is a Trademark of LOK-FAST
Nose TipTM Connector™ is a Trademark of LOK-FAST

Visu-Lok II

Blind Fastener Tools

Drive-Nut Interchangeablity

Dia.	Fastener	Pneumatic	Standard Right Angle	Torq. Resp. Right Angle	Close Qtr. Right Angle	Standard Hand Tool	Close Qtr. Hand Tool
-5	VLII / CLII						
-6	VLII / CLII						
-7	CLII only						
-8	VLII / CLII						
-9	CLII only						
-10	VLII / CLII						
-11	CLII only						
-12	VLII / CLII						

NOTE: VLII - represents Visu-Lok II®
CLII - represents Composi-Lok II®

Composi-LokII® adapter assemblies may install Visu-LokII®
Adapter assemblies identical for both Visu-LokII® and Composi-LokII®

Visu-Lok II® and Composi-Lok II® fasteners have certain common driving dimensions. The drivenuts are identical for both fasteners. In the -8, -10, and -12 diameter fasteners the wrench flats are common to both fastener types. In the -5 and -6 diameters, the wrench flats are not common to Visu-Lok II® and Composi-Lok II®. Therefore, wrench adapters used to install these fasteners are **not** interchangeable.

The larger blind side "footprint" of Composi-Lok II® is accomplished through the use of a longer sleeve and corebolt. The close quarter installation tools permit the corebolt to pass completely through the wrench. Therefore, in the -8, -10, and -12 diameters, close quarter installation is 100% interchangeable. In all other installation tools, the corebolt does not pass completely through the wrench. The wrench adapter (and consequently, the nose adapter) must be longer to install the Composi-Lok II®.

In the common wrench-flat diameters, the longer installation tooling (Composi-Lok II®) may be used to install the Visu-Lok II®, but the tooling for Visu-Lok II® may not be used for Composi-Lok II® installations.

If it is desired to standardize on one system of adapters for use with both types of fasteners, Lok-Fast provides a longer wrench adapter for the -5 and -6 Visu-Lok II® to be used with the Composi-Lok II® nose adapters.

The opposite chart illustrates the interchangeability. The two tooling systems are described in separate sections of this catalog. The new wrench adapters for Visu-Lok II® sizes -5 and -6 are contained only in the section on Visu-Lok II®. For these wrench adapters, selection of the corresponding Composi-Lok II® nose adapter is made by referring to the same page in the section on Composi-Lok tooling.

Visu-Lok II

Blind Fastener Tools

Pneumatic Pistol Driver Assembly for Visu-Lok II®

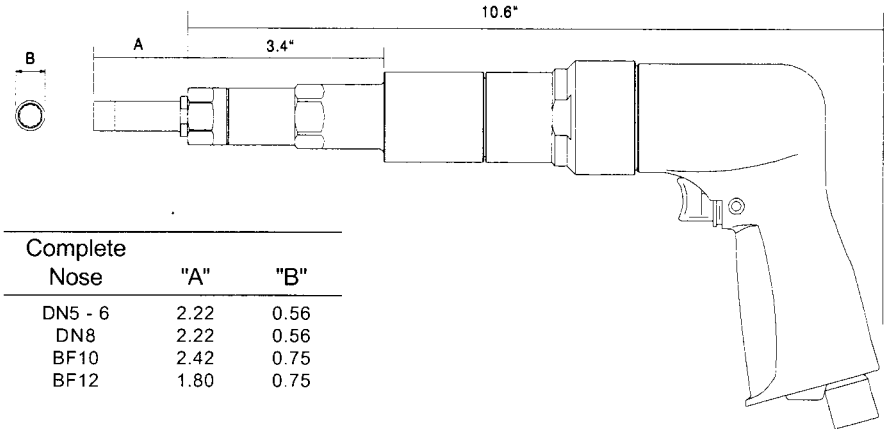

Complete Nose	"A"	"B"
DN5 - 6	2.22	0.56
DN8	2.22	0.56
BF10	2.42	0.75
BF12	1.80	0.75

How To Order:

1. Select the diameter and match with the Table below
2. From the corresponding row select the complete assembly part number or the parts needed.

Example: **DN8AA**

Part Number Includes

- S540MTD Pneumatic Pistol Driver
- MTD302 Master Torque Driver
- DNC8 Nose Tip Connector
- DNUT5-6 Universal Nose Tip
- TD2601 Wrench Adapter

Dia.	Visu-Lok II Series	Complete Assembly	Pneumatic Pistol	Adapter Assembly	Complete Nose Adapter	Nose Tip Connector	Universal Nose Tip	Wrench Adapter	VLII Wrench for CLII Nose
5/32	PLT5000-5-( )	DN5AA		DN5A	DN5-6	DNC5-6	DNUT5-6	TD1651	TD1651-VL
3/16	PLT5000-6-( )	DN6AA		DN6A	DN5-6	DNC5-6	DNUT5-6	TD2001	TD2001-VL
1/4	PLT5000-8-( )	DN8AA	S540MTD	DN8A	DN8	DNC8	DNUT8	TD2601	
5/16	PLT5000-10-( )	DN10AA		DN10A	DN10	DNC10	DNUT12	TD3121	
3/8	PLT5000-12-( )	DNPT12AA		DNPT12A	DNPT12	DNCPT12	DNUT12	PT3751	

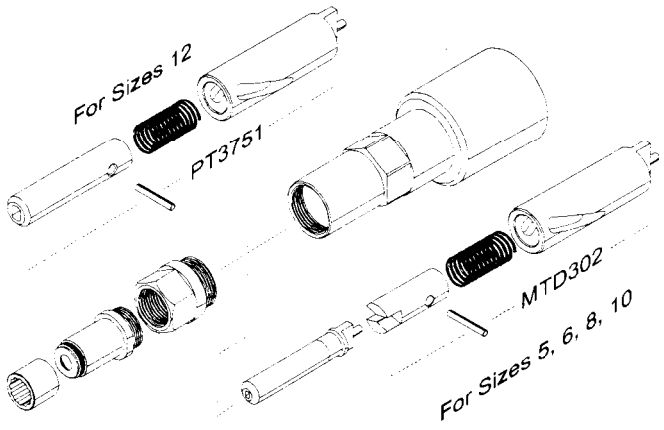

Technical Data	
Operating Preasure	90 PSI
Torque Output	32.5 lbs
Stall Torque	32.5 lbs
Motor Speed	540 rpm
Air Consumption (at free speed)	28 cfm
Horse Power Rating	0.7
Weight	3.5 lbs

Visu-Lok II

Blind Fastener Tools

Pneumatic Right Angle for Visu-Lok II®

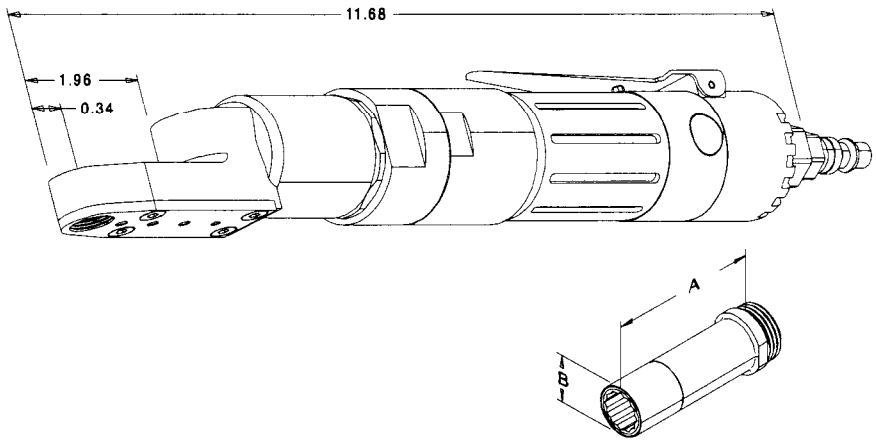

How To Order:

1. Select the diameter and match with the Table below
2. From the corresponding row select the complete assembly part number or the parts needed.

Example: **DNR8AA**

Part Number Includes

- 7440 Pneumatic Wrench Driver
- DNC8 Nose Tip Connector
- DNUT8 Universal Nose Tip
- PW4601 Wrench Adapter

Dia.	Visu-Lok II Series	Complete Assembly	Pneumatic Pistol	Adapter Assembly	Complete Nose Adapter	Nose Tip Connector	Universal Nose Tip	Wrench Adapter	VLII Wrench for CLII Nose
5/32	PLT5000-5-( )	DNR5AA	7440	DNR5A	DN5-6	DNC5-6	DNUT5-6	PW4651	PW4651-VL
3/16	PLT5000-6-( )	DNR6AA		DNR6A	DN5-6	DNC5-6	DNUT5-6	PW4001	PW4001-VL
1/4	PLT5000-8-( )	DNR8AA		DNR8A	DN8	DNC8	DNUT8	PW4601	
5/16	PLT5000-10-( )	DNR10AA		DNR10A	DN10	DNC10	DNUT12	PW4121	

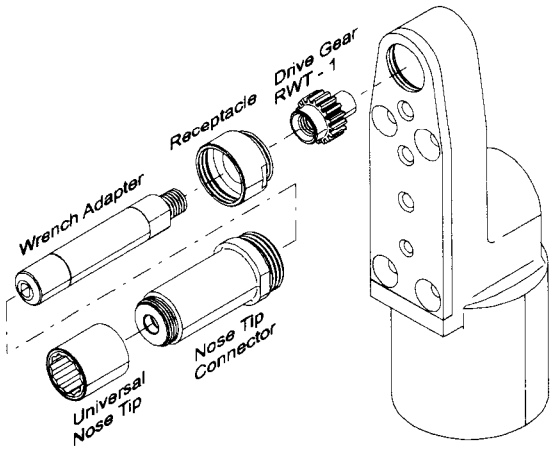

Technical Data	
Operating Preasure	90 PSI
Torque Output	108 in lbs
Stall Torque	10 ft lbs
Motor Speed	500 rpm
Air Consumption (at free speed)	18 cfm
Horse Power Rating	0.33
Weight	3.5 lbs

Visu-Lok II

Blind Fastener Tools

Pneumatic Right Angle Torque Responsive Adapter for Visu-Lok II®

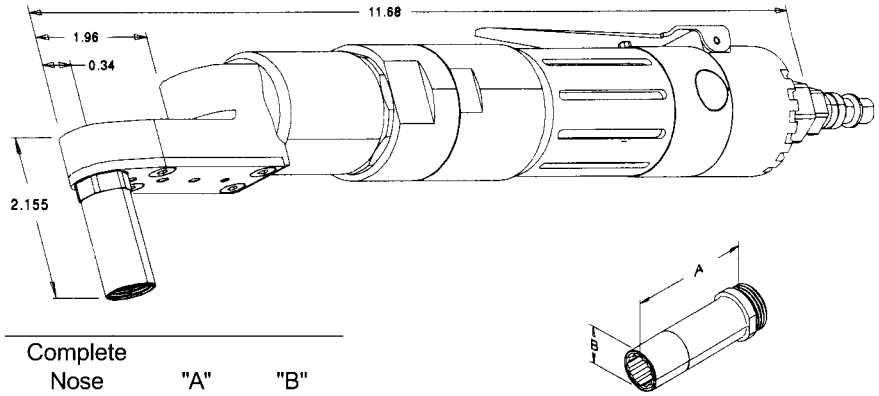

Complete Nose	"A"	"B"
DNRT5 - 6	2.22	0.56
DNRT8	2.22	0.56
DNRT10	2.42	0.75

How To Order:

1. Select the diameter and match with the Table below
2. From the corresponding row select the complete assembly part number or the parts needed.

Example: **DNRT5AA**

Part Number Includes

- 7440M Pneumatic Wrench Driver
- DNCRT5-6 Nose Tip Connector
- DNUT5-6 Universal Nose Tip
- TD5651 Wrench Adapter

Dia.	Visu-Lok II Series	Complete Assembly	Pneumatic Pistol	Adapter Assembly	Complete Nose Adapter	Nose Tip Connector	Universal Nose Tip	Wrench Adapter	VLII Wrench for CLII Nose
5/32	PLT5000-5-( )	DNRT5AA	7440M	DNRT5A	DNRT5-6	DNCRT5-6	DNUT5-6	TD5651	TD5651-VL
3/16	PLT5000-6-( )	DNRT6AA		DNRT6A	DNRT5-6	DNCRT5-6	DNUT5-6	TD5001	TD5001-VL
1/4	PLT5000-8-( )	DNRT8AA		DNRT8A	DNRT8	DNCRT8	DNUT8	TD5601	
5/16	PLT5000-10-( )	DNRT10AA		DNRT10A	DNRT10	DNCRT10	DNUT12	TD5121	

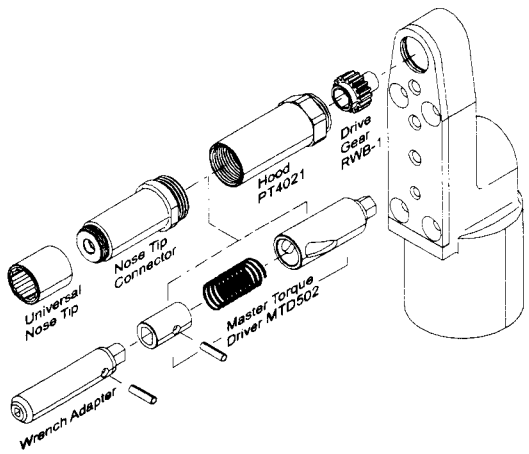

Technical Data	
Operating Preasure	90 PSI
Torque Output	108 in lbs
Stall Torque	10 ft lbs
Motor Speed	500 rpm
Air Consumption (at free speed)	18 cfm
Horse Power Rating	0.33
Weight	3.5 lbs

Visu-Lok II

Blind Fastener Tools

Pneumatic Right Angle w/ Integrated Socket Torque Responsive Adapter for Visu-Lok II®

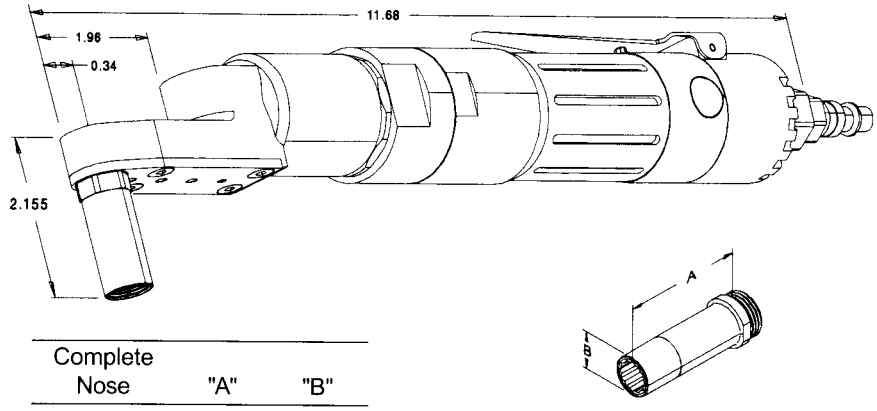

Complete Nose	"A"	"B"
DNRPT5 - 6	1.33	0.56
DNRPT8	1.33	0.56
DNRPT10	1.53	0.75

How To Order:

1. Select the diameter and match with the Table below
2. From the corresponding row select the complete assembly part number or the parts needed.

Example: **DNRPT5AA**

Part Number Includes

- 7440M Pneumatic Wrench Driver
- DNCRPT5-6 Nose Tip Connector
- DNUT5-6 Universal Nose Tip
- UPTRW-5 Complete Wrench/Driver
- UWT-5 Wrench Tip

Dia.	Visu-Lok II Series	Complete Assembly	Pneumatic Pistol	Adapter Assembly	Complete Nose Adapter	Nose Tip Connector	Universal Nose Tip	Wrench Adapter	Wrench Tip
5/32	PLT5000-5-( )	DNRPT5AA	7440M	DNRPT5A	DNPT5-6	DNCRPT5-6	DNUT5-6	UPTRW-5	UWT-5
3/16	PLT5000-6-( )	DNRPT6AA		DNRPT6A	DNPT5-6	DNCRPT5-6	DNUT5-6	UPTRW-6	UWT-6
1/4	PLT5000-8-( )	DNRPT8AA		DNRPT8A	DNPT8	DNCRPT8	DNUT8	UPTRW-8	UWT-8
5/16	PLT5000-10-( )	DNRPT10AA		DNRPT10A	DNPT10	DNCRPT10	DNUT12	UPTRW-10	UWT-10

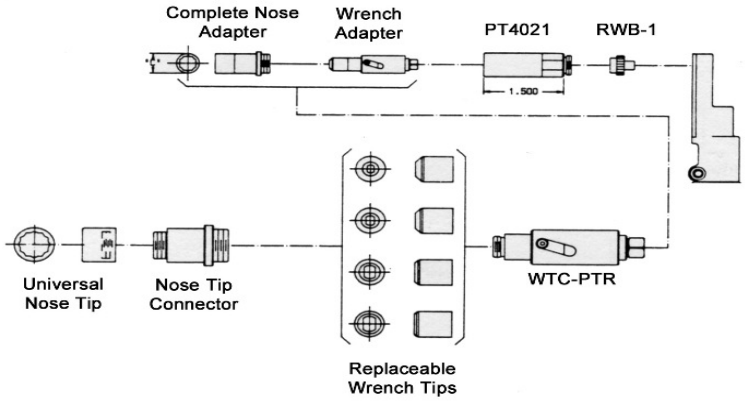

Technical Data	
Operating Preasure	90 PSI
Torque Output	108 in lbs
Stall Torque	10 ft lbs
Motor Speed	500 rpm
Air Consumption (at free speed)	18 cfm
Horse Power Rating	0.33
Weight	3.5 lbs

Visu-Lok II

Blind Fastener Tools

Pneumatic Right Angle Close Quarter for Visu-Lok II®

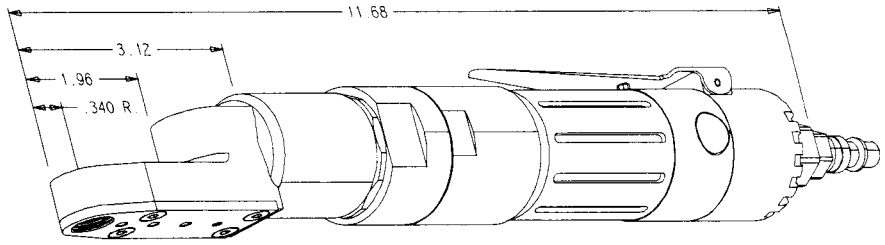

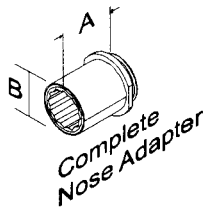

Complete Nose	"A"	"B"
DNRC5 - 6	0.53	0.56
DNRC8	0.53	0.56
BFRC10	0.73	0.75

How To Order:

1. Select the diameter and match with the Table below
2. From the corresponding row select the complete assembly part number or the parts needed.

Example: **DRNRC6-AA**

Part Number Includes

- 7440C Pneumatic Wrench Driver
- DNRC5-6 Nose Tip Connector
- DNUT5-6 Universal Nose Tip
- RW5-1 Wrench Gear

Dia.	Visu-Lok II Series	Complete Assembly	Pneumatic Pistol	Adapter Assembly	Complete Nose Adapter	Nose Tip Connector	Universal Nose Tip	Wrench Adapter
5/32	PLT5000-5-( )	DNRC5AA	7440C	DNRC5A	DNRC5-6	DNCRC5-6	DNUT5-6	RW5-1
3/16	PLT5000-6-( )	DNRC6AA		DNRC6A	DNRC5-6	DNCRC5-6	DNUT5-6	RW6-1
1/4	PLT5000-8-( )	DNRC8AA		DNRC8A	DNRC8	DNCRC8	DNUT8	RW8-1
5/16	PLT5000-10-( )	DNRC10AA		DNRC10A	DNRC10	DNCRC10	DNUT12	RW10-1

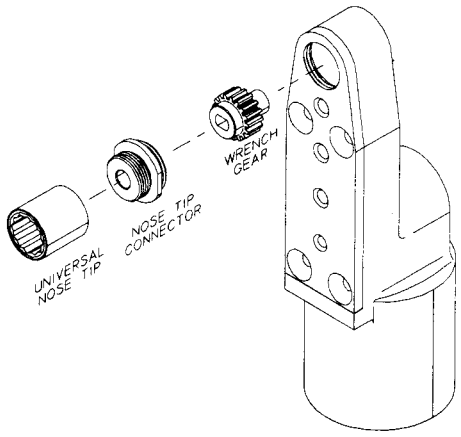

Technical Data	
Operating Preasure	90 PSI
Torque Output	108 in lbs
Stall Torque	10 ft lbs
Motor Speed	500 rpm
Air Consumption (at free speed)	18 cfm
Horse Power Rating	0.33
Weight	3.5 lbs

Visu-Lok II

Blind Fastener Tools

Ratchet Hand Tool for Visu-Lok II®

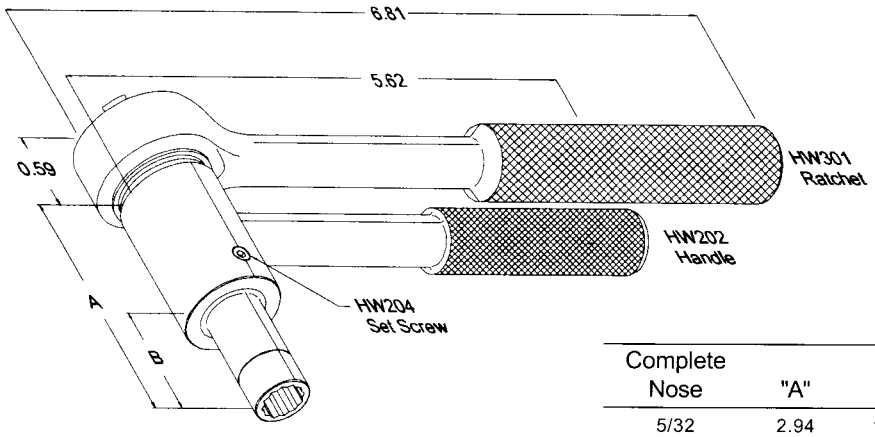

Complete Nose	"A"	"B"	"C"
5/32	2.94	1.50	0.56
3/16	2.94	1.50	0.56
7/32	3.07	1.62	0.56
1/4	3.07	1.62	0.56
5/16	3.14	1.70	0.75
3/8	3.16	1.72	0.75

How To Order:

1. Select the diameter and match with the Table on this page.
2. From the corresponding row select the complete assembly part number or the parts needed.

Example: **DNH5AA**

Part Number Includes

- HW300 Ratchet Wrench
- HW202 Holder
- DNCH5-6 Nose Tip Connector
- DNUT5-6 Universal Nose Tip
- HW1651 Wrench Gear

Dia.	Visu-Lok II Series	Complete Assembly	Pneumatic Pistol	Adapter Assembly	Complete Nose Adapter	Nose Tip Connector	Universal Nose Tip	Wrench Adapter	VLII Wrench FOR CLII Nose
5/32	PLT5000-5-( )	DNH5AA		DNH5A	DNH5-6	DNCH5-6	DNUT5-6	HW1651	HW1651-VL
3/16	PLT5000-6-( )	DNH6AA		DNH6A	DNH5-6	DNCH5-6	DNUT5-6	HW2001	HW2001-VL
1/4	PLT5000-8-( )	DNH8AA	HW300	DNH8A	DNH8	DNCH8	DNUT8	HW2601	
5/16	PLT5000-10-( )	DNH10AA		DNH10A	DNH10	DNCH10	DNUT12	HW3121	
3/8	PLT5000-12-( )	DNH12AA		DNH12A	DNH12	DNCH12	DNUT12	HW3751	

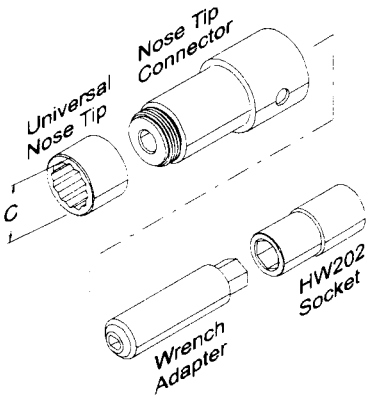

Visu-Lok II

Blind Fastener Tools

Ratchet Hand Tool Close Quarter for Visu-Lok II®

Complete Nose	"A"	"B"	"C"
5/32	0.65	0.51	0.56
3/16	0.65	0.51	0.56
7/32	0.80	0.46	0.56
1/4	0.80	0.46	0.56
5/16	0.80	067	0.75
3/8	0.80	0.67	0.75

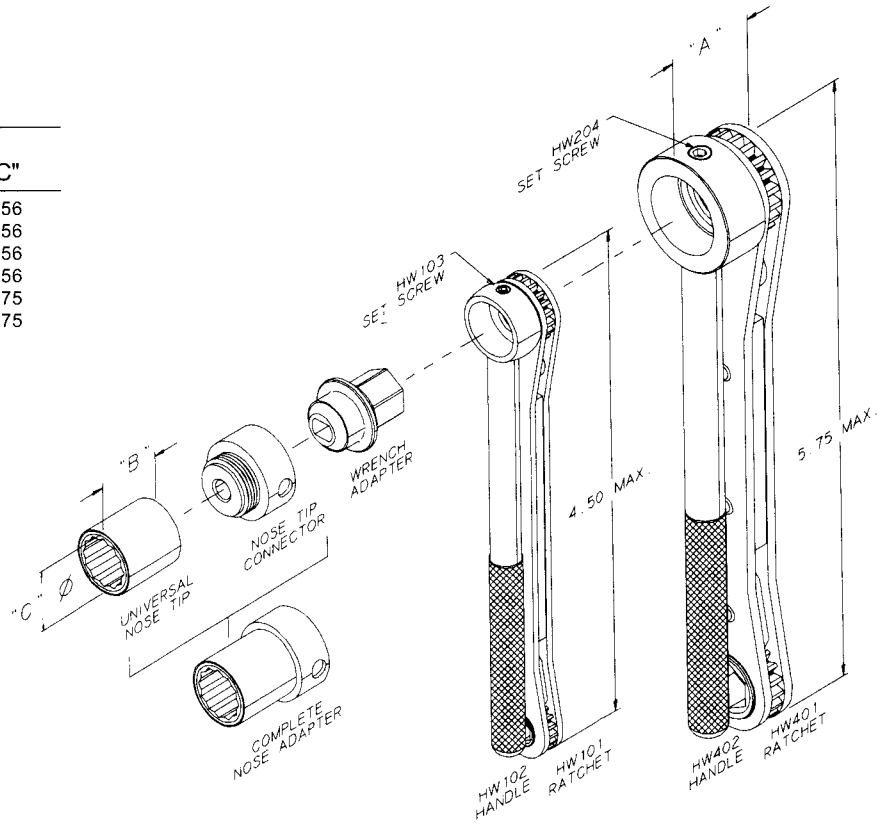

How To Order:

1. Select the diameter and match with the Table on this page.
2. From the corresponding row select the complete assembly part number or the parts needed.

Example: **DNHC5AA**

Part Number Includes

- HW100 Ratchet Wrench
- HW102 Holder
- DNHC5-6 Nose Tip Connector
- DNUT5-6 Universal Nose Tip
- HW5 Wrench Gear

Dia.	Visu-Lok II Series	Complete Assembly	Pneumatic Pistol	Adapter Assembly	Complete Nose Adapter	Nose Tip Connector	Universal Nose Tip	Wrench Adapter
5/32	PLT5000-5-( )	DNHC5AA	HW100	DNHC5A	DNHC5-6	DNCHC5-6	DNUT5-6	HW5
3/16	PLT5000-6-( )	DNHC6AA	HW100	DNHC6A	DNHC5-6	DNCHC5-6	DNUT5-6	HW8
1/4	PLT5000-8-( )	DNHC8AA	HW400	DNHC8A	DNHC8	DNCHC8	DNUT8	HW8
5/16	PLT5000-10-( )	DNHC10AA	HW400	DNHC10A	DNHC12	DNCHC12	DNUT12	HW10
3/8	PLT5000-12-( )	DNHC12AA	HW400	DNHC12A	DNHC12	DNCHC12	DNUT12	HW12

Visu-Lok II

Blind Fastener Tools

Visu-Lok Grip Scales

Grip Scale Part #: LFVLG-1

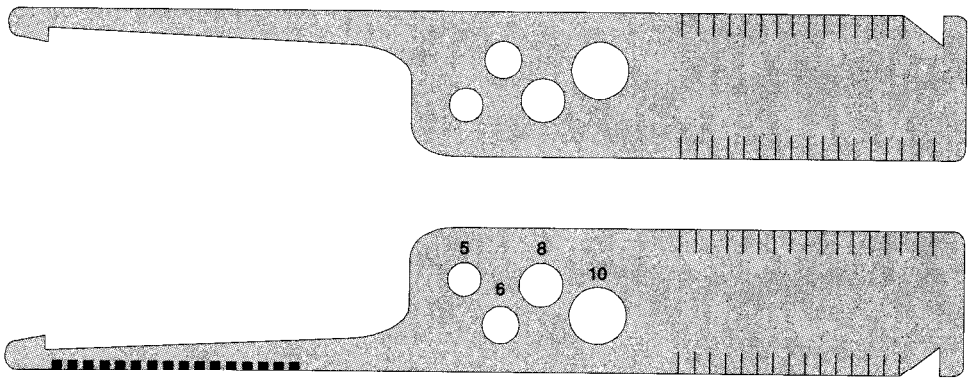

Selection of Grip Length

In measuring hole depth take reading where the skin surface meets the number or line on gauge. If directly on a line use either the indicated grip or the next longer grip.

In cases where there a tappered sheet condition exits, determine grip length at the hole centerline. The taper must not exceed 7° to ensure the proper performance of the fastener.

Composi-Lok II

Blind Fastener Tools

Universal Nose Tip™ System for Installing Drive-Nut Type Fasteners

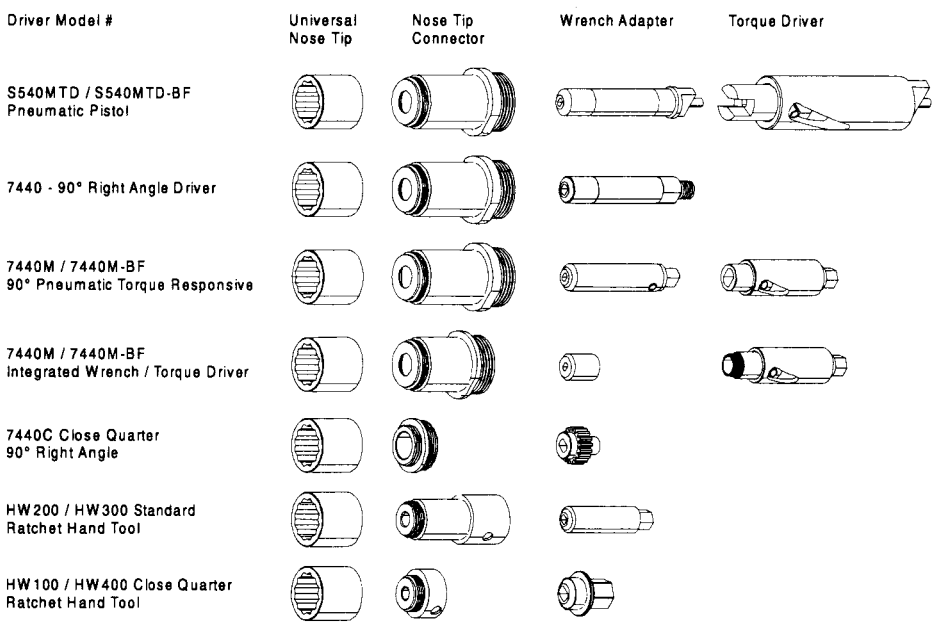

Universal Interchangeable Nose Tips

Installation tools have been simplified in the "DRIVE NUT" fastener system in both Visu-Lok II® and Composi-Lok II®.

LOK-FAST has further simplified the tooling with UNIVERSAL NOSE TIP™. Now, for a given size range any nose tip may be interchangeable with any driver.

An installation tool consists of a driver and an adapter assembly. The adapter assembly is comprised of a nose adapter to engage the corebolt through rotation to clamp-up and break-off. In most cases, for a given driver, the LOK-FAST UNIVERSAL NOSE TIP™ SYSTEM uses only three complete nose adapters for all the fastener head styles, and for the complete range of sizes from 5/32" to 3/8".

Two Part Nose Adapter

The nose adapter is now a two piece design consisting of the Universal Nose Tip™ and the Nose Tip Connector™. The nose tip engages the fastener drivenut, and the nose tip is threaded onto the connector to form a complete installation tool. The two piece design allows interchanging of the nose tips among all driver configurations and further allows interchangeability between Visu-Lok II® and Composi-Lok II® installation tools. The nose tip may be removed with a standard allen wrench using clockwise rotation.

The pictorial chart on the proceeding page is an illustration of the Universal Nose Tip™ System.

Universal Nose Tip™ is a Trademark of LOK-FAST
Nose TipTM Connector™ is a Trademark of LOK-FAST

Composi-Lok II

Blind Fastener Tools

Drive-Nut Interchangeablity

Dia.	Fastener	Pneumatic	Standard Right Angle	Torq. Resp. Right Angle	Close Qtr. Right Angle	Standard Hand Tool	Close Qtr. Hand Tool
-5	VLII / CLII						
-6	VLII / CLII						
-7	CLII only						
-8	VLII / CLII						
-9	CLII only						
-10	VLII / CLII						
-11	CLII only						
-12	VLII / CLII						

NOTE: VLII - represents Visu-Lok II®
CLII - represents Composi-Lok II®

Composi-LokII® adapter assemblies may install Visu-LokII®
Adapter assemblies identical for both Visu-LokII® and Composi-LokII®

Visu-Lok II® and Composi-Lok II® fasteners have certain common driving dimensions. The drivenuts are identical for both fasteners. In the -8, -10, and -12 diameter fasteners the wrench flats are common to both fastener types. In the -5 and -6 diameters, the wrench flats are not common to Visu-Lok II® and Composi-Lok II®. Therefore, wrench adapters used to install these fasteners are **not** interchangeable.

The larger blind side "footprint" of Composi-Lok II® is accomplished through the use of a longer sleeve and corebolt. The close quarter installation tools permit the corebolt to pass completely through the wrench. Therefore, in the -8, -10, and -12 diameters, close quarter installation is 100% interchangeable. In all other installation tools, the corebolt does not pass completely through the wrench. The wrench adapter (and consequently, the nose adapter) must be longer to install the Composi-Lok II®.

In the common wrench-flat diameters, the longer installation tooling (Composi-Lok II®) may be used to install the Visu-Lok II®, but the tooling for Visu-Lok II® may not be used for Composi-Lok II® installations.

If it is desired to standardize on one system of adapters for use with both types of fasteners, Lok-Fast provides a longer wrench adapter for the -5 and -6 Visu-Lok II® to be used with the Composi-Lok II® nose adapters.

The opposite chart illustrates the interchangeability. The two tooling systems are described in separate sections of this catalog. The new wrench adapters for Visu-Lok II® sizes -5 and -6 are contained only in the section on Visu-Lok II®. For these wrench adapters, selection of the corresponding Composi-Lok II® nose adapter is made by referring to the same page in the section on Composi-Lok tooling.

Composi-Lok II

Blind Fastener Tools

Pneumatic Pistol Driver Assembly for Composi-Lok II®

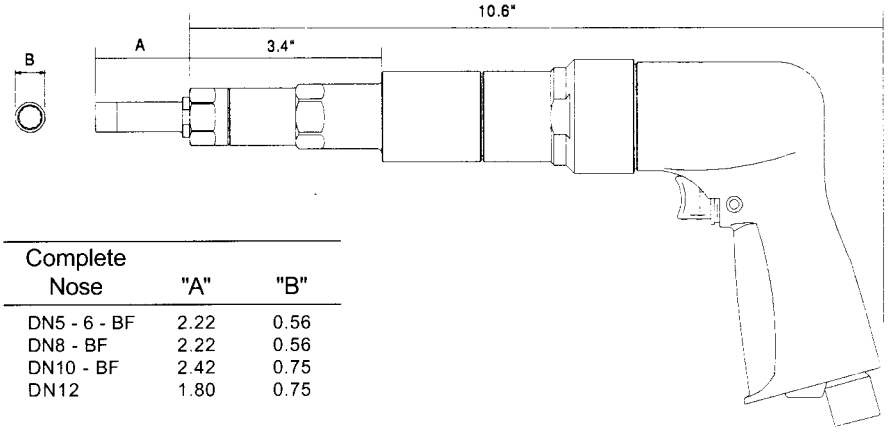

Complete Nose	"A"	"B"
DN5 - 6 - BF	2.22	0.56
DN8 - BF	2.22	0.56
DN10 - BF	2.42	0.75
DN12	1.80	0.75

How To Order:

1. Select the diameter and match with the Table below
2. From the corresponding row select the complete assembly part number or the parts needed.

Example: **DN8AA-BF**

Part Number Includes

- S540MTD-BF Pneumatic Pistol Driver
- MTD302 Master Torque Driver
- DNC8-BF Nose Tip Connector
- DNUT8 Universal Nose Tip
- TD2601-BF Wrench Adapter

Dia.	Fastener Size	Complete Assembly	Adapter Assembly	Nose Adapter	Nose Tip Connector	Universal Nose Tip	Wrench Adapter
5/32	5-( )	DN5AA-BF	DN5A-BF	DN5-6-BF	DNC5-6-BF	DNUT5-6	TD1651-BF
3/16	6-( )	DN6AA-BF	DN6A-BF	DN5-6-BF	DNC5-6-BF	DNUT5-6	TD2001-BF
7/32	7-( )	DN7AA-BF	DN7A-BF	DN8-BF	DNC8-BF	DNUT8	TD7-BF
1/4	8-( )	DN8AA-BF	DN8A-BF	DN8-BF	DNC8-BF	DNUT8	TD2601-BF
9/32	9-( )	DN10AA-BF	DN10A-BF	DN10-BF	DNC10-BF	DNUT12	TD3121-BF
5/16	10-( )	DNPT10AA-BF	DNPT10A-BF	DNPT12	DNCPT12	DNUT12	PT10-BF
11/32	11-( )	DN12AA-BF	DNPT12A-BF	DNPT12	DNCPT12	DNUT12	PT12-BF
3/8	12-( )	DN12AA-BF	DNPT12A-BF	DNPT12	DNCPT12	DNUT12	PT12-BF

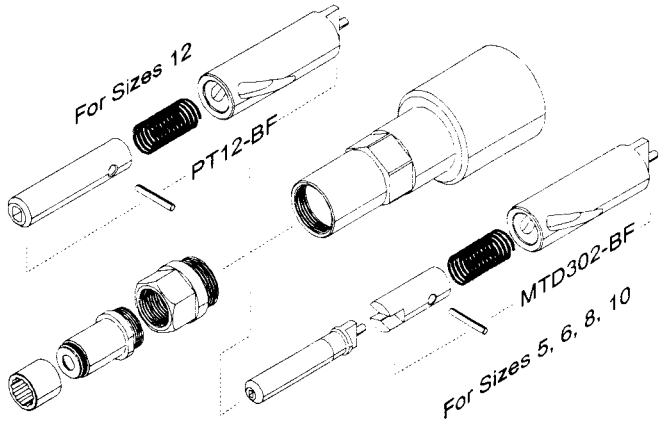

Technical Data	
Operating Preasure	90 PSI
Torque Output	32.5 lbs
Stall Torque	32.5 lbs
Motor Speed	540 rpm
Air Consumption (at free speed)	28 cfm
Horse Power Rating	0.7
Weight	3.5 lbs

Composi-Lok II

Blind Fastener Tools

Pneumatic Right Angle for Composi-Lok II®

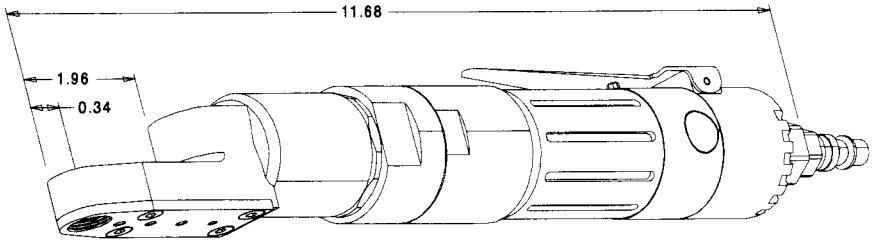

Complete Nose	"A"	"B"
DN5 - 6 - BF	2.22	0.56
DN8 - BF	2.22	0.56
DN10 - BF	2.42	0.75

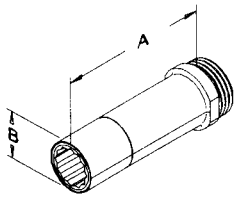

How To Order:

1. Select the diameter and match with the Table below
2. From the corresponding row select the complete assembly part number or the parts needed.

Example: **DNR8AA-BF**

Part Number Includes

- 7440 Pneumatic Wrench Driver
- DNC8-BF Nose Tip Connector
- DNUT8 Universal Nose Tip
- PW4602-BF Wrench Adapter

Dia.	Fastener Assembly	Complete Assembly	Adapter Assembly	Nose Adapter	Nose Tip Connector	Universal Nose Tip	Wrench Adapter
5/32	5-( )	DNR5AA-BF	DNR5A-BF	DN5-6-BF	DNC5-6-BF	DNUT5-6	PW4651-BF
3/16	6-( )	DNR6AA-BF	DNR6A-BF	DN5-6-BF	DNC5-6-BF	DNUT5-6	PW4001-BF
7/32	7-( )	DNR7AA-BF	DNR7A-BF	DN8-BF	DNC8-BF	DNUT8	PW4201-BF
1/4	8-( )	DNR8AA-BF	DNR8A-BF	DN8-BF	DNC8-BF	DNUT8	PW4602-BF
9/32	9-( )	DNR10AA-BF	DNR10A-BF	DN10-BF	DNC10-BF	DNUT12	PW4121-BF
5/16	10-( )	DNR10AA-BF	DNR10A-BF	DN10-BF	DNC10-BF	DNUT12	PW4121-BF

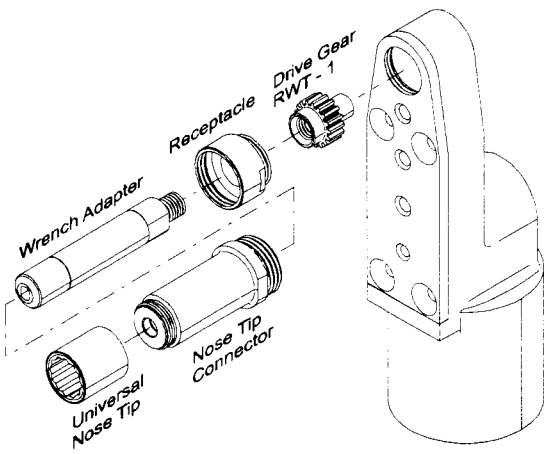

Technical Data	
Operating Preasure	90 PSI
Torque Output	108 in lbs
Stall Torque	10 ft lbs
Motor Speed	500 rpm
Air Consumption (at free speed)	18 cfm
Horse Power Rating	0.33
Weight	3.5 lbs

Composi-Lok II

Blind Fastener Tools

Pneumatic Right Angle Torque Responsive Adapter Assemblies for Composi-Lok II®

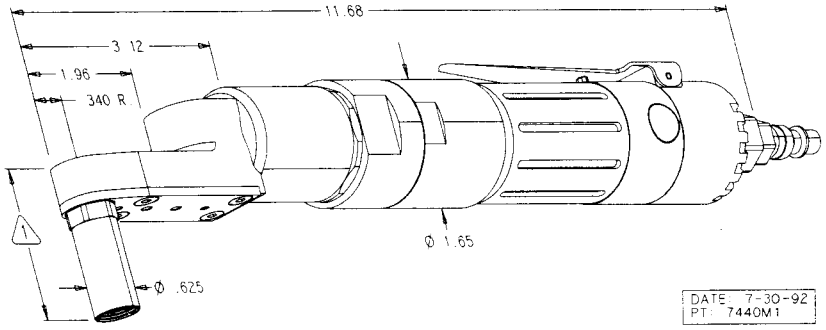

Complete Nose	"A"	"B"
DNRT5 - 6 - BF	2.22	0.56
DNRT8 - BF	2.22	0.56
DNRT10 - BF	2.42	0.75

How To Order:

1. Select the diameter and match with the Table below
2. From the corresponding row select the complete assembly part number or the parts needed.

Example: **DNRT7AA-BF**

Part Number Includes

- 7440M-BF Pneumatic Wrench Driver
- DNCRT8-BF Nose Tip Connector
- DNUT5-6 Universal Nose Tip
- TD5201-BF Wrench Adapter

Dia.	Fastener Size	Complete Assembly	Adapter Assembly	Nose Adapter	Nose Tip Connector	Universal Nose Tip	Wrench Adapter
5/32	5-( )	DNRT5AA-BF	DNRT5A-BF	DNRT5-6-BF	DNCRT5-6-BF	DNUT5-6	TD5651-BF
3/16	6-( )	DNRT6AA-BF	DNRT6A-BF	DNRT5-6-BF	DNCRT5-6-BF	DNUT5-6	TD5001-BF
7/32	7-( )	DNRT7AA-BF	DNRT7A-BF	DNRT8-BF	DNCRT8-BF	DNUT8	TD5201-BF
1/4	8-( )	DNRT8AA-BF	DNRT8A-BF	DNRT8-BF	DNCRT8-BF	DNUT8	TD5601-BF
9/32	9-( )	DNRT10AA-BF	DNRT10A-BF	DNRT10-BF	DNCRT10-BF	DNUT12	TD5121-BF
5/16	10-( )	DNRT10AA-BF	DNRT10A-BF	DNRT10-BF	DNCRT10-BF	DNUT12	TD5121-BF

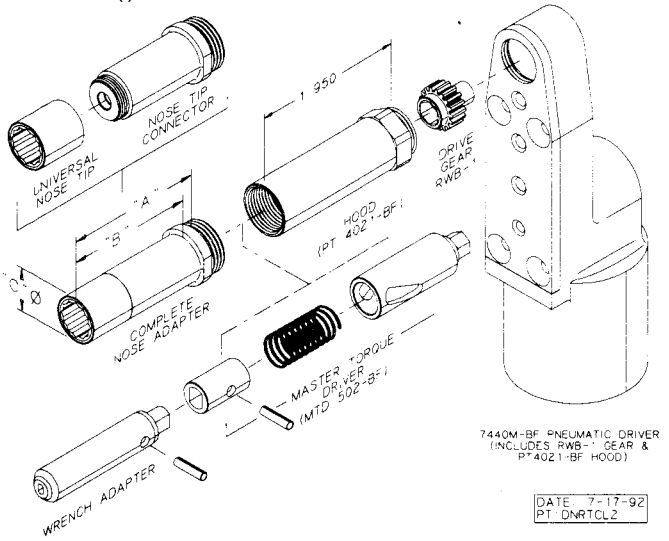

Technical Data	
Operating Preasure	90 PSI
Torque Output	108 in lbs
Stall Torque	10 ft lbs
Motor Speed	500 rpm
Air Consumption (at free speed)	18 cfm
Horse Power Rating	0.33
Weight	3.5 lbs

Composi-Lok II

Blind Fastener Tools

Pneumatic Right Angle Torque Responsive with Integrated Wrench/Torque Driver for Composi-Lok II®

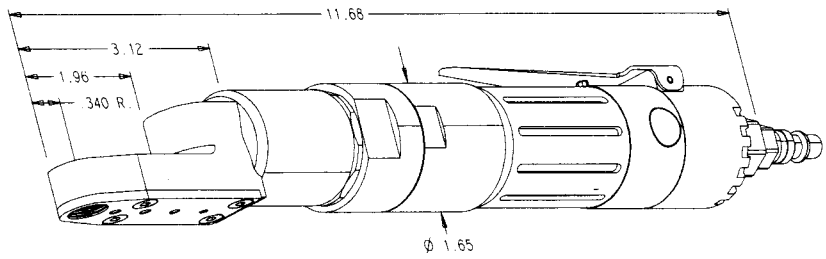

Complete Nose	"A"	"B"
DNRPT5 - 6 - BF	1.33	0.56
DNRPT8-BF	1.33	0.56
DNRPT10-BF	1.53	0.75

How To Order:

1. Select the diameter and match with the Table below
2. From the corresponding row select the complete assembly part number or the parts needed.

Example: **DNRPT10AA-BF**

Part Number Includes

- 7440M-BF Pneumatic Wrench Driver
- DNCRPT10-BF Nose Tip Connector
- DNUT12 Universal Nose Tip
- UPTRW-10-BF Complete Wrench/Driver
- UWT-10 Wrench Tip

Dia.	Fastener Size	Complete Assembly	Adapter Assembly	Nose Adapter	Nose Tip Connector	Universal Nose Tip	Wrench Adapter	Wrench Tip
5/32	5-( )	DNRPT5AA-BF	DNRPT5A-BF	DNRPT5-6-BF	DNCRPT5-6-BF	DNUT5-6	UPTRW-5-BF	UWT-5-BF
3/16	6-( )	DNRPT6AA-BF	DNRPT6A-BF	DNRPT5-6-BF	DNCRPT5-6-BF	DNUT5-6	UPTRW-6-BF	UWT-6-BF
7/32	7-( )	DNRPT7AA-BF	DNRPT7A-BF	DNRPT8-BF	DNCRPT8-BF	DNUT8	UPTRW--7-BF	UWT-7-BF
1/4	8-( )	DNRPT8AA-BF	DNRPT8A-BF	DNRPT8-BF	DNCRPT8-BF	DNUT8	UPTRW-8-BF	UWT-8-BF
5/16	10-( )	DNRPT10AA-BF	DNRPT10A-BF	DNRPT10-BF	DNCRPT10-BF	DNUT12	UPTRW-10-BF	UWT-10-BF

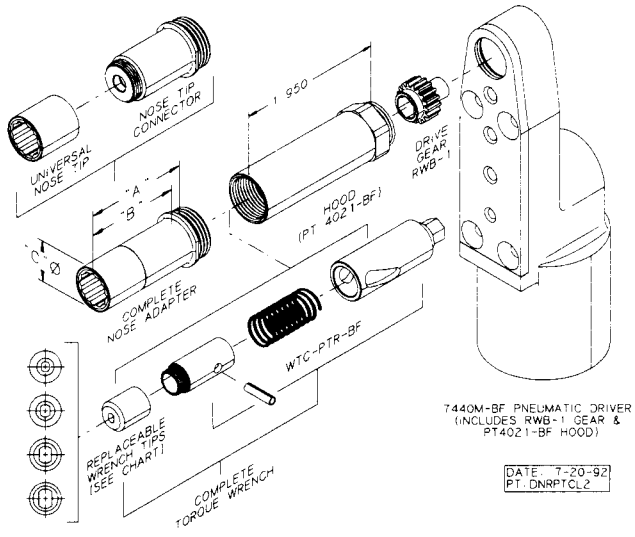

Technical Data	
Operating Preasure	90 PSI
Torque Output	108 in lbs
Stall Torque	10 ft lbs
Motor Speed	500 rpm
Air Consumption (at free speed)	18 cfm
Horse Power Rating	0.33
Weight	3.5 lbs

Composi-Lok II

Blind Fastener Tools

Pneumatic Right Angle Close Quarter Driver Assemblies for Composi-Lok II®

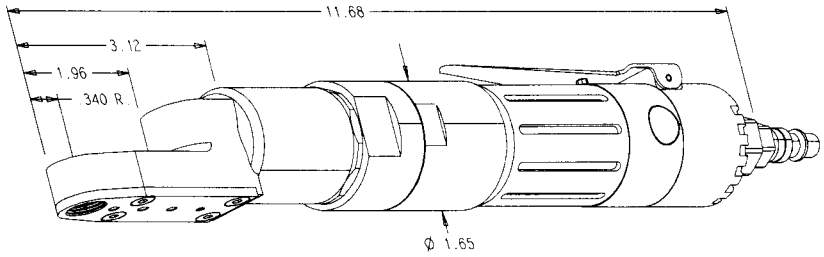

DATE 7-30-92
PT: 7440C1

Complete Nose	"A"	"B"
DNRC5 - 6 - BF	0.53	0.56
DNRC8-BF	0.53	0.56
DNRC10-BF	0.73	0.75

How To Order:

1. Select the diameter and match with the Table below
2. From the corresponding row select the complete assembly part number or the parts needed.

Example: **DNRC5AA-BF**

Part Number Includes

- 7440C Pneumatic Wrench Driver
- DNCR5-6 Nose Tip Connector
- DNUT5-6 Universal Nose Tip
- RW5-1-BF Wrench Gear

Dia.	Fastener Size	Complete Assembly	Adapter Assembly	Nose Adapter	Nose Tip Connector	Universal Nose Tip	Wrench Adapter
5/32	5-( )	DNRC5AA-BF	DNRC5A-BF	DNRC5-6	DNCRC5-6	DNUT5-6	RW5-1-BF
3/16	6-( )	DNRC6AA-BF	DNRC6A-BF	DNRC5-6	DNCRC5-6	DNUT5-6	RW6-1-BF
7/32	7-( )	DNRC7AA-BF	DNRC7A-BF	DNRC8	DNCRC-8	DNUT8	RW7-1-BF
1/4	8-( )	DNRC8AA-BF	DNRC8A	DNRC8	DNCRC-8	DNUT8	RW8-1
9/32	9-( )	DNRC10AA	DNRC10A	DNRC10	DNCRC-10	DNUT12	RW10-1
5/16	10-( )	DNRC10AA	DNRC10A	DNRC10	DNCRC-10	DNUT12	RW10-1

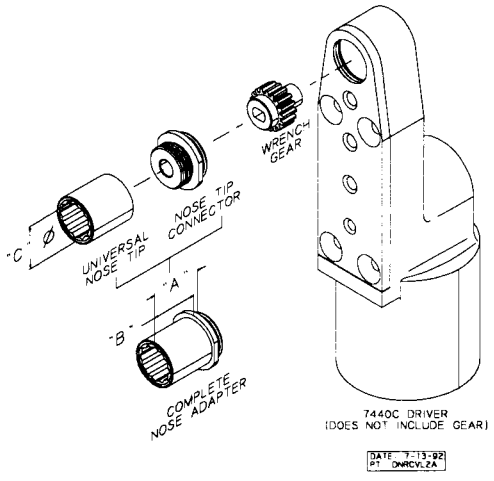

Technical Data	
Operating Preasure	90 PSI
Torque Output	108 in lbs
Stall Torque	10 ft lbs
Motor Speed	500 rpm
Air Consumption (at free speed)	18 cfm
Horse Power Rating	0.33
Weight	3.5 lbs

Composi-Lok II

Blind Fastener Tools

Standard Ratchet Hand Tool
Adapter Assembly for Composi-Lok II®

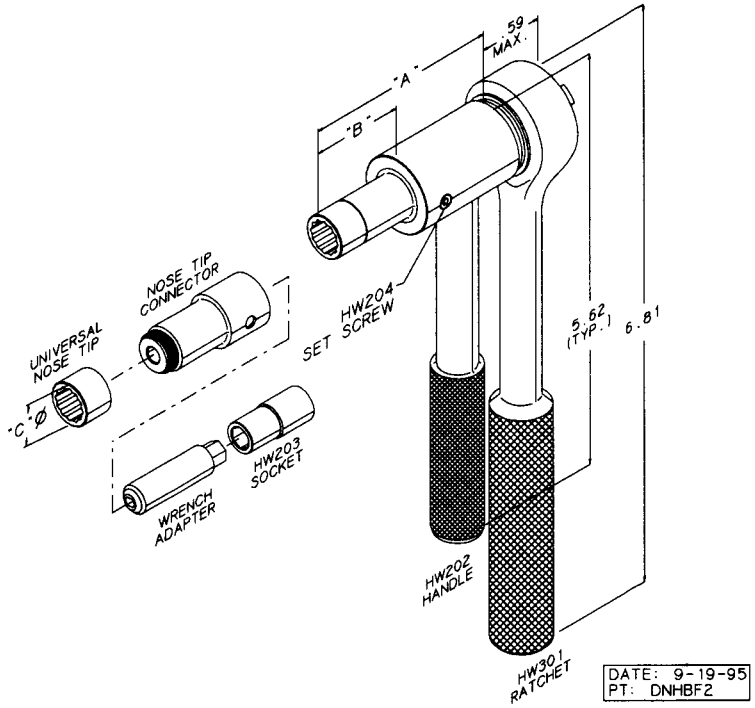

Nose	"A"	"B"
5/32	2.94	0.56
3/16	2.94	0.56
7/32	3.07	0.56
1/4	3.07	0.56
5/16	3.14	0.75
3/8	3.16	0.75

How To Order:

1. Select the diameter and match with the Table on this page.
2. From the corresponding row select the complete assembly part number or the parts needed.

Example: **DNH5AA-BF**

Part Number Includes

- HW301 Ratchet Wrench
- HW202 Holder
- DNCH5-6-BF Nose Tip Connector
- DNUT5-6 Universal Nose Tip
- HW1651-BF Wrench Gear

Dia.	Fastener Size	Complete Assembly	Adapter Assembly	Nose Adapter	Nose Tip Connector	Universal Nose Tip	Wrench Adapter
5/32	5-( )	DNH5AA-BF	DNH5A-BF	DNH5-6-BF	DNCH5-6-BF	DNUT5-6	HW1651-BF
3/16	6-( )	DNH6AA-BF	DNH6A-BF	DNH5-6-BF	DNCH5-6-BF	DNUT5-6	HW2001-BF
7/32	7-( )	DNH7AA-BF	DNH7A-BF	DNH8-BF	DNCH8-BF	DNUT8	HW2201-BF
1/4	8-( )	DNH8AA-BF	DNH8A-BF	DNH8-BF	DNCH8-BF	DNUT8	HW2601-BF
9/32	9-( )	DNH10AA-BF	DNH10A-BF	DNH12-BF	DNCH12-BF	DNUT12	HW3121-BF
5/16	10-( )	DNH10AA-BF	DNH10A-BF	DNH12-BF	DNCH12-BF	DNUT12	HW3121-BF
11/32	11-( )	DNH12AA-BF	DNH12A-BF	DNH12-BF	DNCH12-BF	DNUT12	HW3751-BF
3/8	12-( )	DNH12AA-BF	DNH12A-BF	DNH12-BF	DNCH12-BF	DNUT12	HW3751-BF

Composi-Lok II

Blind Fastener Tools

Close Quarter Ratchet Hand Tool
Adapter Assemblies for Composi-Lok II®

Nose	"A"	"B"
DNHC5-6	0.65	0.56
DNHC8	0.80	0.56
DNHC12	0.80	0.75

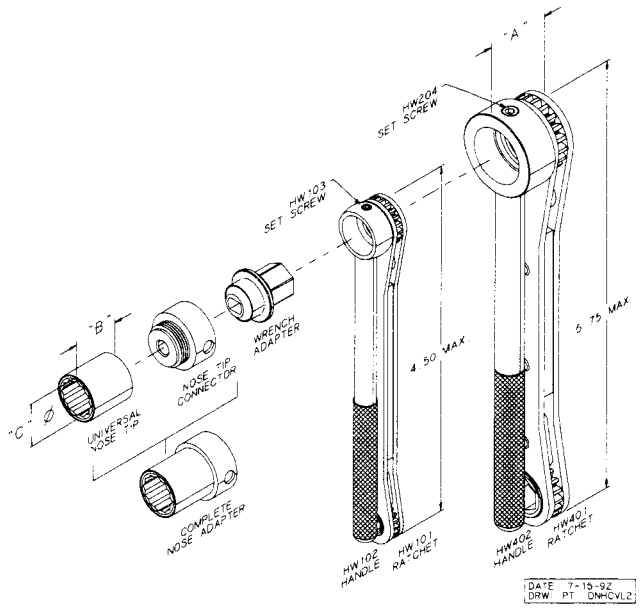

How To Order:

1. Select the diameter and match with the Table on this page.
2. From the corresponding row select the complete assembly part number or the parts needed.

Example: **DNHC5AA-BF**

Part Number Includes

- HW101 Ratchet Wrench
- HW102 Holder
- DNHC5-6 Nose Tip Connector
- DNUT5-6 Universal Nose Tip
- HW5-BF Wrench Gear

Dia.	Fastener Size	Complete Assembly	Ratchet Driver	Adapter Assembly	Nose Adapter	Nose Tip Connector	Universal Nose Tip	Wrench Adapter
5/32	5-( )	DNHC5AA-BF	HW100	DNHC5A-BF	DNHC5-6	DNCHC5-6	DNUT5-6	HW5-BF
3/16	6-( )	DNHC6AA-BF	HW100	DNHC6A-BF	DNHC5-6	DNCHC5-6	DNUT5-6	HW6-BF
7/32	7-( )	DNHC7AA-BF	HW400	DNHC7A-BF	DNHC8	DNCHC8	DNUT8	HW7-BF
1/4	8-( )	DNHC8AA	HW400	DNHC8A	DNHC8	DNCHC8	DNUT8	HW8
9/32	9-( )	DNHC10AA	HW400	DNHC10A	DNHC12	DNCHC12	DNUT12	HW10
5/16	10-( )	DNHC10AA	HW400	DNHC10A	DNHC12	DNCHC12	DNUT12	HW10
11/32	11-( )	DNHC12AA	HW400	DNHC12A	DNHC12	DNCHC12	DNUT12	HW12
3/8	12-( )	DNHC12AA	HW400	DNHC12A	DNHC12	DNCHC12	DNUT12	HW12

Composi-Lok II

Blind Fastener Tools

Grip Scales for Composi-Lok® and Composi-Lok II® Fasteners

Grip Scale Part #: LFCLG-1 & LFCLG-2

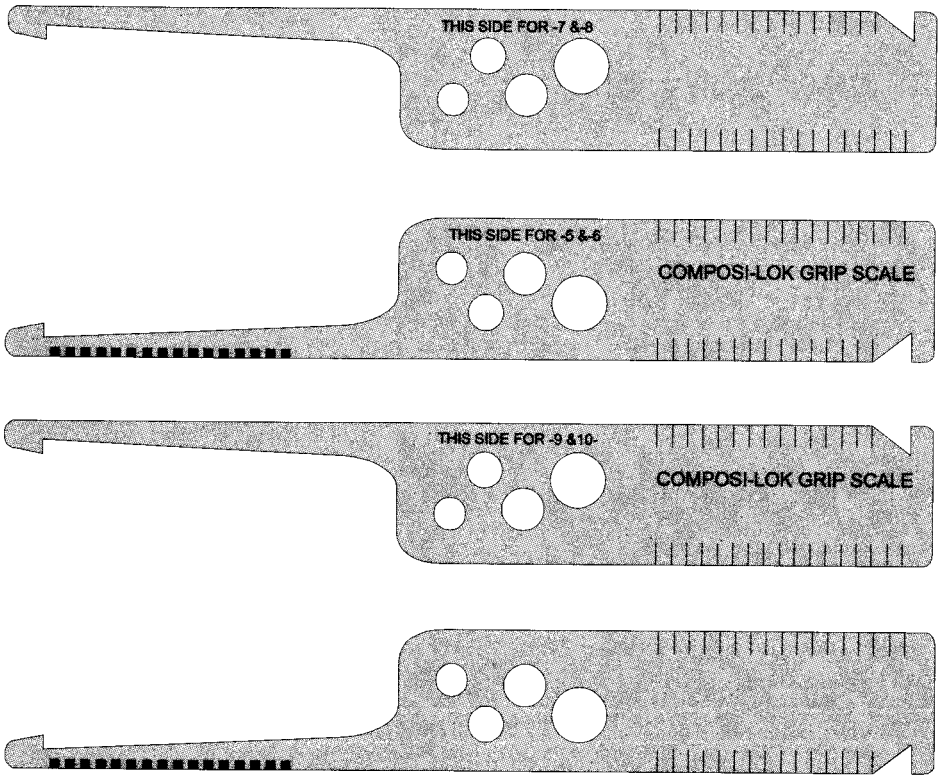

Selection of Grip Length

In measuring hole depth take reading where the skin surface meets the number or line on gauge. If directly on a line use either the indicated grip or the next longer grip.

In cases where there a tappered sheet condition exits, determine grip length at the hole centerline. The taper must not exceed 7° to ensure the proper performance of the fastener.

Composi-Lok III
Blind Fastener Tools

Pneumatic Pistol Driver Assembly for Composi-Lok 3

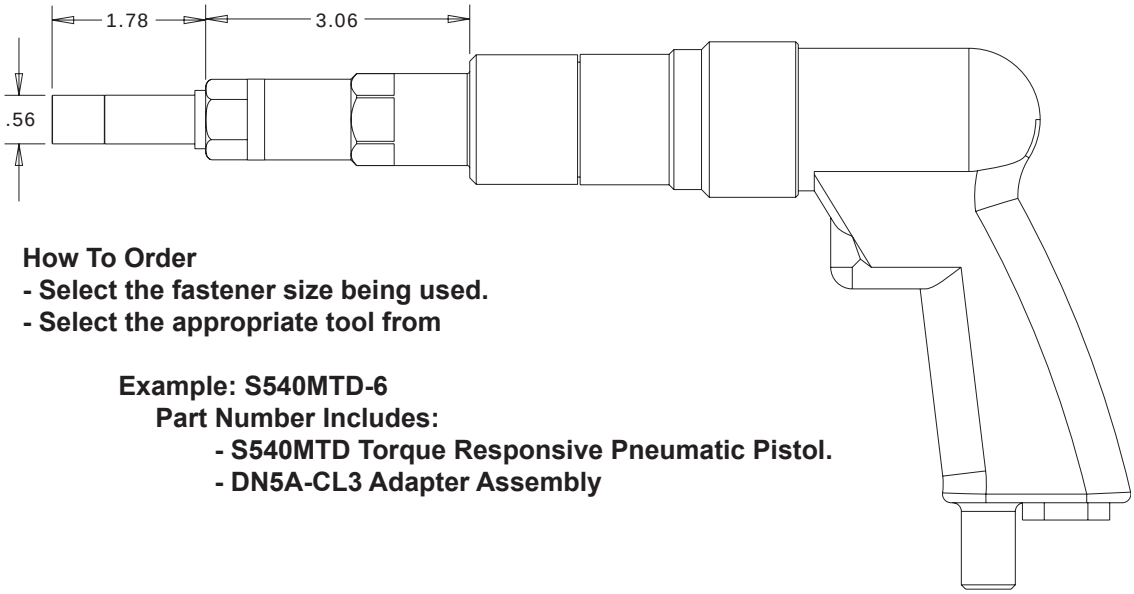

How To Order
- Select the fastener size being used.
- Select the appropriate tool from

Example: S540MTD-6
Part Number Includes:
- S540MTD Torque Responsive Pneumatic Pistol.
- DN5A-CL3 Adapter Assembly

Dia.	Composi-Lok 3 Series	Complete Assembly	Pneumatic Pistol	Adapter Assembly	Complete Nose Adapter	Nose Tip Connector	Universal Nose Tip	Wrench Adapter
5/32"	MBF2300	DN5AA-CL3	S540MTD	DN5A-CL3	DN5-8-CL3	DNC5-6	DNUT5-8-CL3	TD1651-CL3
3/16"		DN6AA-CL3		DN6A-CL3	DN5-8-CL3	DNC5-6	DNUT5-8-CL3	TD2001-CL3
1/4"		DN8AA-CL3		DN8A-CL3	DN5-8-CL3	DNC8	DNUT5-8-CL3	TD2601-CL3

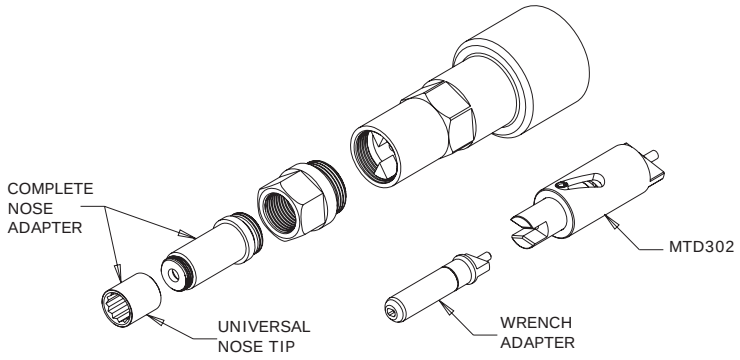

Technical Data	
Operating Pressure	90 PSI
Torque Output	220 in-lbs
Motor Speed	500 rpm
Air Consumption (at free speed)	30 cfm
Horse Power Rating	0.5
Weight	3.5lb

Composi-Lok III
Blind Fastener Tools

Pneumatic Right Angle Assembly for Composi-Lok 3

How To Order
- Select the fastener size being used.
- Select the appropriate tool from Table below

Example: DNR5AA-CL3
Part Number Includes
- 7440 Pneumatic Right Angle Motor.
- DNR5A-CL3 Driver Assembly.

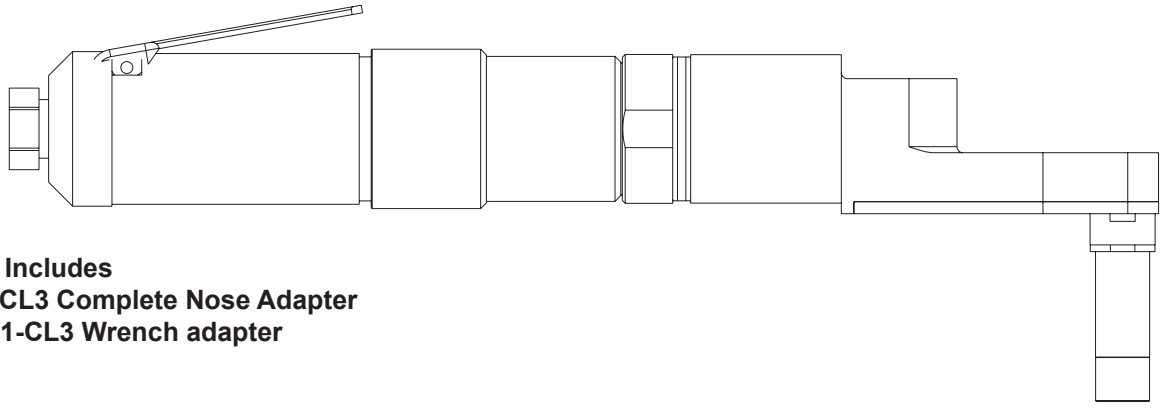

DNR5A-CL3
Part Number Includes
- DN5-8-CL3 Complete Nose Adapter
- PW4651-CL3 Wrench adapter

Dia.	Composi-Lok 3 Series	Complete Assembly	Pneumatic Pistol	Adapter Assembly	Complete Nose Adapter	Nose Tip Connector	Universal Nose Tip	Wrench Adapter
5/32"	MBF2300	DNR5AA-CL3	7440.	DNR5A-CL3	DN5-8-CL3	DNC5-6	DNUT5-8-CL3	PW4651-CL3
3/16"		DNR6AA-CL3		DNR6A-CL3	DN5-8-CL3	DNC5-6	DNUT5-8-CL3	PW4001-CL3
1/4"		DNR8AA-CL3		DNR8A-CL3	DN5-8-CL3	DNC8	DNUT5-8-CL3	PW4601-CL3

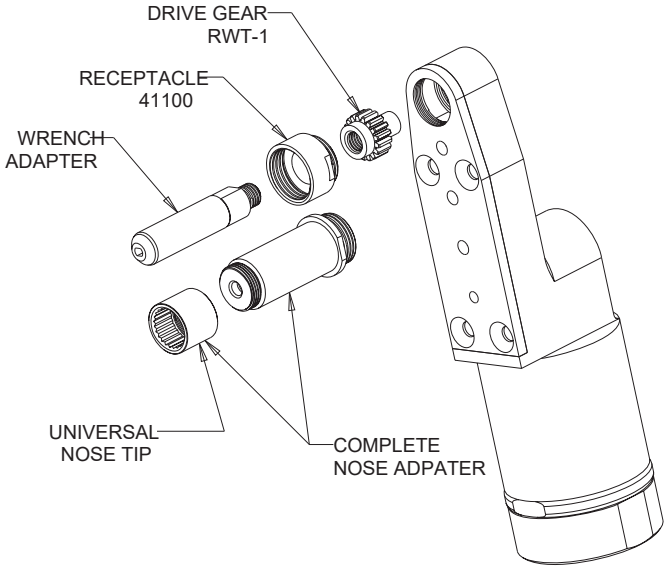

Technical Data	
Operating Pressure	90 PSI
Torque Output	220 in-lbs
Motor Speed	500 rpm
Air Consumption (at free speed)	30 cfm
Horse Power Rating	0.5
Weight	3.5lb

Composi-Lok III
Blind Fastener Tools

Standard Ratchet Hand Tool
Adapter Assembly for Composi-Lok 3

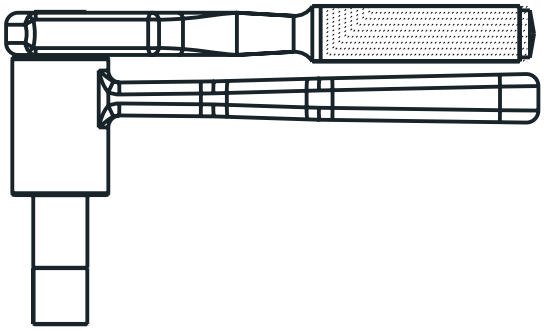

Dia	Composi-Lok 3 Series	Complete Assembly	Adapter Assembly	Complete Nose Adapter	Nose Tip Connector	Universal Nose Tip	Wrench Adapter
5/32"	MBF2300	DNH5AA-CL3	DNH5A-CL3	DNH5-8-CL3	DNC5-6	DNUT5-8-CL3	HW1651-CL3
3/16"		DNH6AA-CL3	DNH6A-CL3	DNH5-8-CL3	DNC5-6	DNUT5-8-CL3	HW2001-CL3
1/4"		DNH8AA-CL3	DNH8A-CL3	DNH5-8-CL3	DNC8	DNUT5-8-CL3	HW2601-CL3

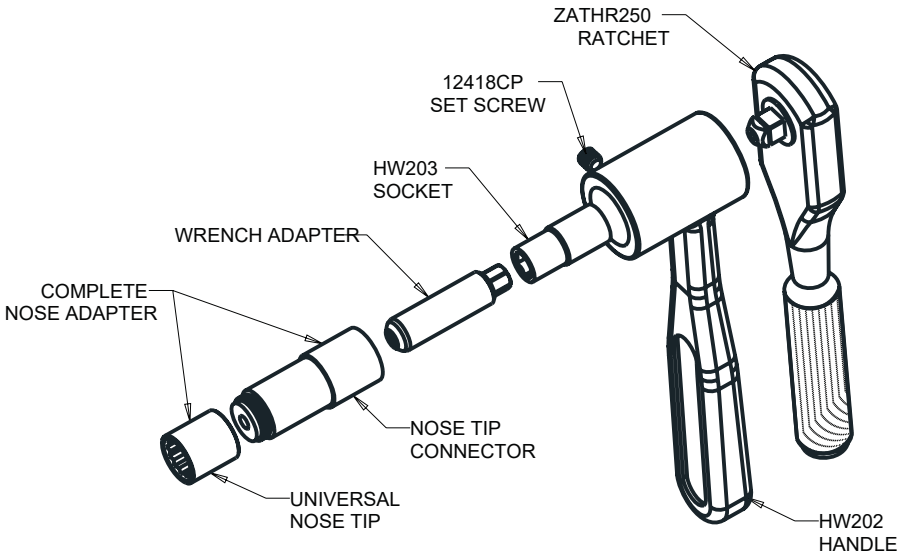

Jo-Bolt Kits

Blind Fastener Tools

4000 Kit
Visu-Lok Ratchet Hand Tool

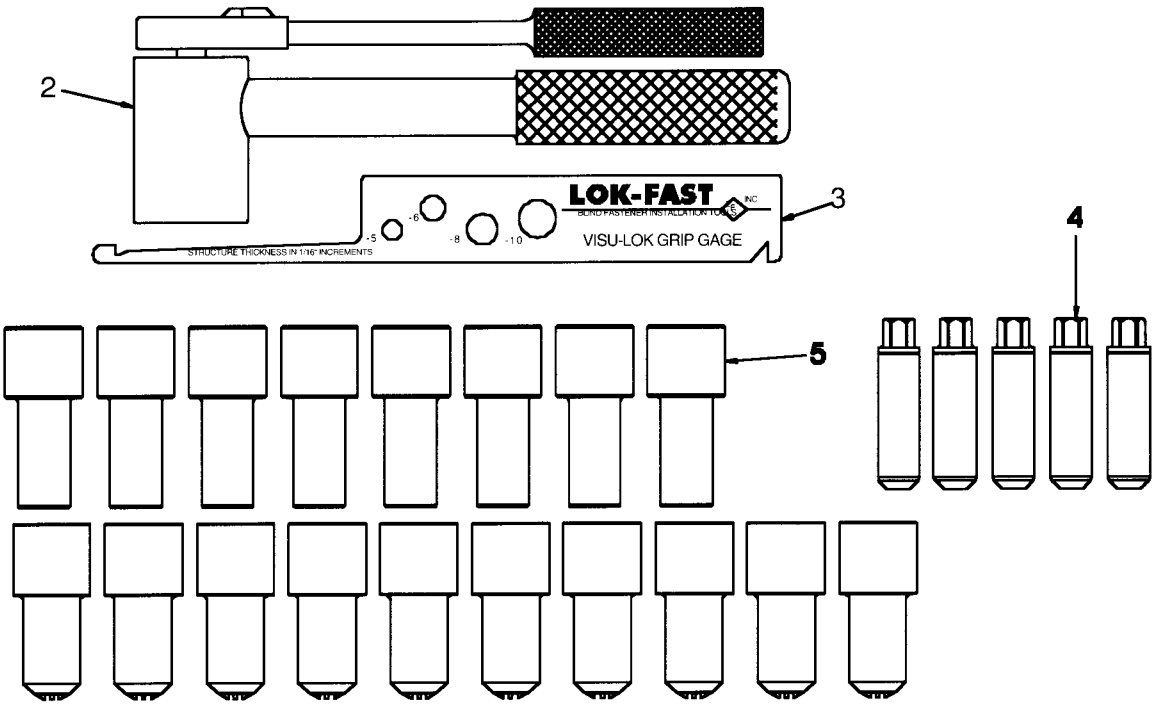

Item	Part #	Description
1	4020-4	Tool Box
2	HW300	Ratchet Hand Tool
3	LFVLG-1	Visu-Lok Grip Gauge
4	HW1651	Fastener Driver -5
	HW2001	Fastener Driver -6
	HW2601	Fastener Driver -8
	HW3121	Fastener Driver -10
	HW3751	Fastener Driver -12
5	HW1652	Flush Nose -5
	HW1652P	Protruding Nose -5
	HW1652A	Millable Nose -5
	HW1652T	Reduced Flush Nose -5
	HW2002	Flush Nose -6

Item	Part #	Description
5	HW2002P	Protruding Nose -6
	HW2002A	Millable Nose -6
	HW2002T	Reduced Flush Nose -6
	HW2602	Flush Nose -8
	HW2602P	Protruding Nose -8
	HW2602A	Millable Nose -8
	HW2602T	Reduced Flush Nose -8
	HW3122	Flush Nose -10
	HW3122P	Protruding Nose -10
	HW3122T	Reduced Flush Nose -10
	HW3752	Flush Nose -12
	HW3752P	Protruding Nose -12
	HW3752T	Reduced Flush Nose -12

Jo-Bolt Kits

Blind Fastener Tools

VLHK-101
Visu-Lok = Ratchet Hand Tool Kit
Flush and Protruding

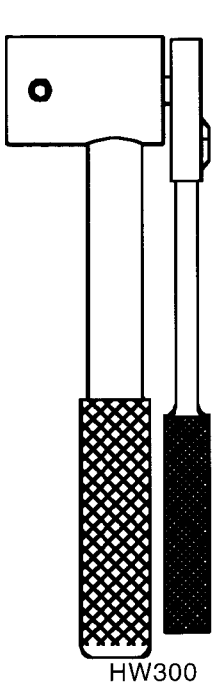
HW300

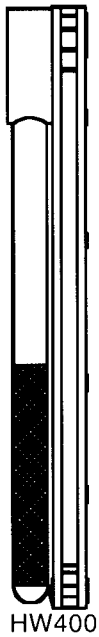
HW400


HW100

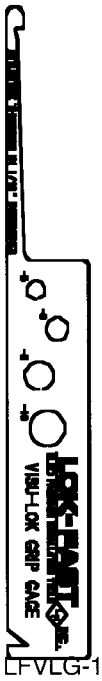

LFVLG-1

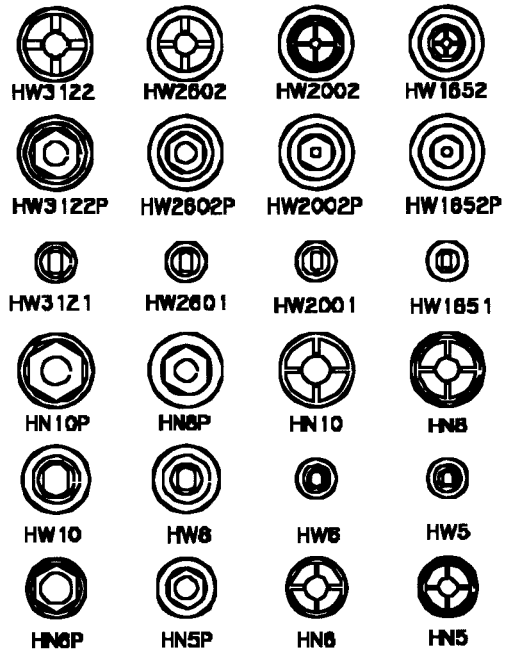

VLHK-102
Visu-Lok = Ratchet Hand Tool Kit
Flush and Protruding

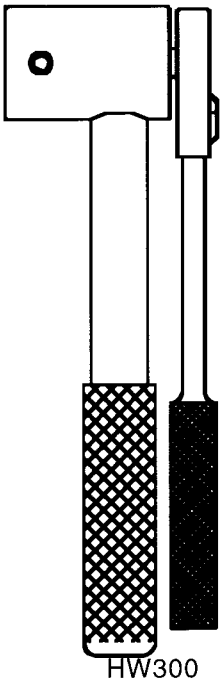
HW300

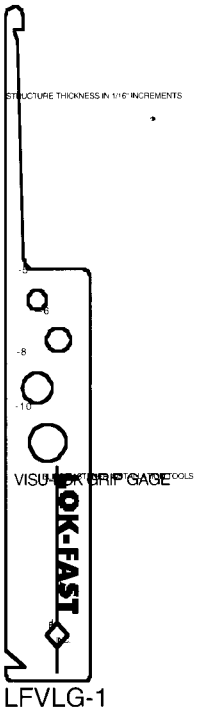

LFVLG-1

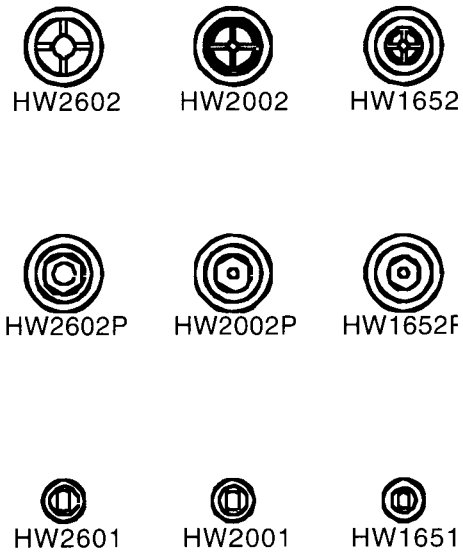

Jo-Bolt Kits

Blind Fastener Tools

4090 Kit
Visu-Lok Pistol
Master Torque Driver

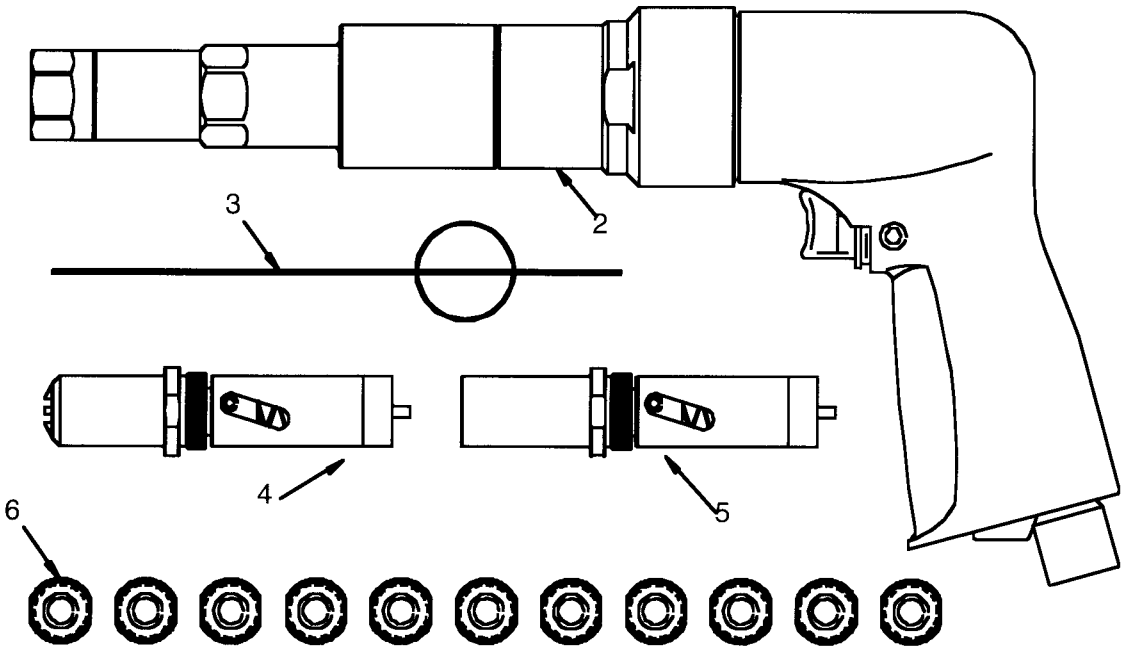

Item	Part #	Description
1	4020-4	Tool Box
2	S540MTD	Pneumatic Motor
3	LFVLG-1	Grip Gauge
4	PT375	PT Flush Nose
5	PT375P	PT Protruding Nose
6	TD165	Flush Nose
	TD165P	Protruding Nose
	TD165A	Millable Nose
	TD200	Flush Nose
	TD200P	Protruding Nose
	TD200A	Millable Nose
	TD260	Flush Nose
	TD260P	Protruding Nose
	TD260A	Millable Nose
	TD312	Flush Nose
	TD312P	Millable Nose

Jo-Bolt Kits

Blind Fastener Tools

4070 Kit
Visu-Lok Right Angle
Torque Respsonsive Kit

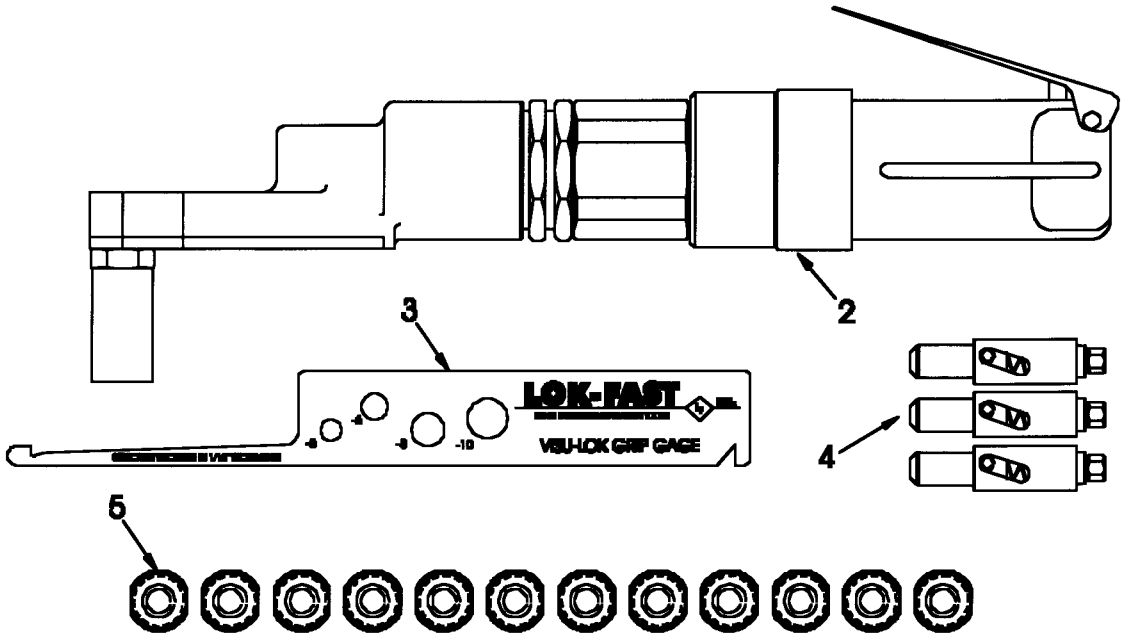

Item	Part #	Description
1	4020-4	Tool Box
2	7440M	Complete Driver Assy.l
3	LFVLG-1	Visu-Lok Grip Gauge
4	PT4651	Fastener Driver -5
	PT4001	Fastener Driver -6
	PT4601	Fastener Driver -8
5	PT4652	Flush Nose -5
	PT4652P	Protruding Nose -5
	PT4652A	Millable Nose -5

Item	Part #	Description
5	PT4652T	Reduced Flush -5
	PT4002	Flush Nose -6
	PT4002P	Protruding Nose -6
	PT4002A	Millable Nose -6
	PT4002T	Reduced Flush Nose -6
	PT4602	Flush Nose -8
	PT4602P	Protruding Nose -8
	PT4602A	Millable Nose -8
	PT4602T	Reduced Flush -8

Jo-Bolt Kits

Blind Fastener Tools

CLHK-101
Composi-Lok
Ratchet Hand Tool Kit

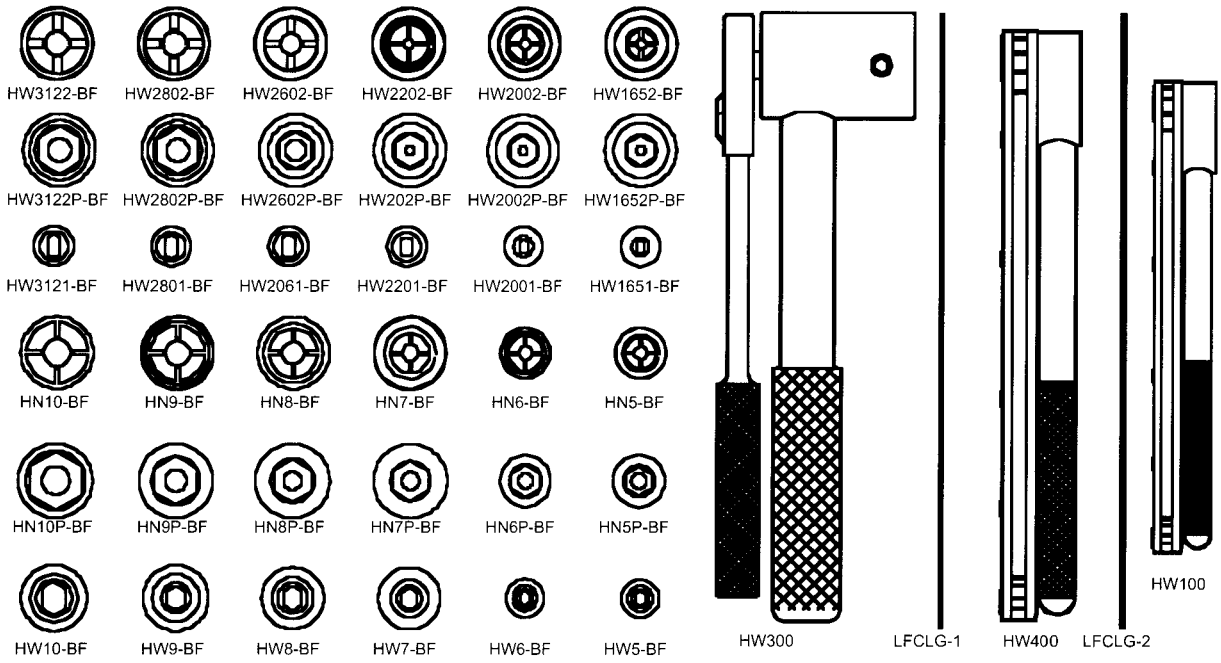

CLIIHK-101
Composi-LokII
Ratchet Hand Tool Kit

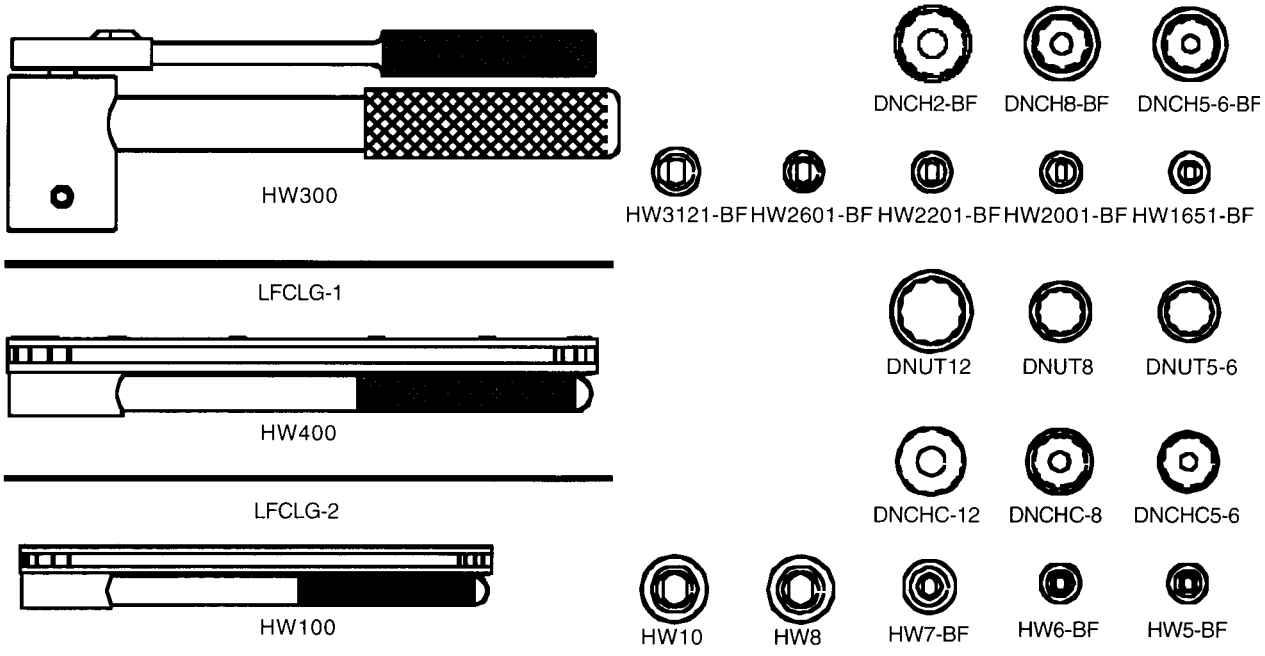

Jo-Bolt Kits

Blind Fastener Tools

4080 Kit
Composi-Lok Pistol
Master Torque Driver

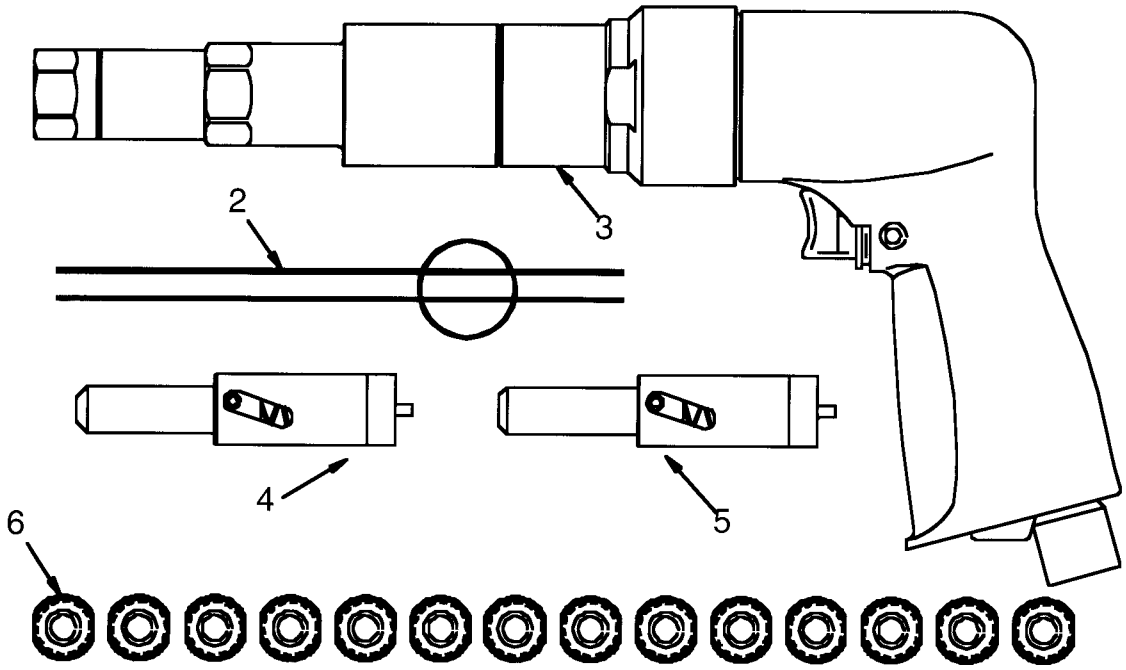

Item	Part #	Description
1	4020-4	Tool Box
2	S540MTD-BF	Ratchet Hand Tool
3	LFCLG-1	Composi-Lok Grip Gauge
	LFCLG-2	Composi-Lok Grip Gauge
4	PT10-BF	Fastener Driver -10
5	PT12-BF	Fastener Driver -12
6	TD1651-BF	Fastener Driver -5
	TD2001-BF	Fastener Driver -6
	TD2601-BF	Fastener Driver -8
	PW3652T-BF	Reduced Flush Nose - 5
	PW3652P-BF	Protruding Nose -5
	PW3652-BF	Flsuh Nose -5

Item	Part #	Description
6	PW3002T-BF	Reduced Flush Nose -6
	PW3002P-BF	Protruding Nose -6
	PW3002-BF	Flush Nose -6
	PW3602T-BF	Reduced Flush Nose -8
	PW3602P-BF	Protruding Nose -8
	PW3602-BF	Flush Nose -8
	PT10FT-BF	Reduced Flush Nose -10
	PT10P-BF	Protruding Nose -10
	PT10F-BF	Flush Nose -10
	PT12FT-BF	Reduced Flush Nose -12
	PT12P-BF	Protruding Nose -12
	PT12F-BF	Flush Nose -12

Jo-Bolt Kits

Blind Fastener Tools

4060 Kit
Composi-Lok Right Angle
Master Torque Driver Assembly

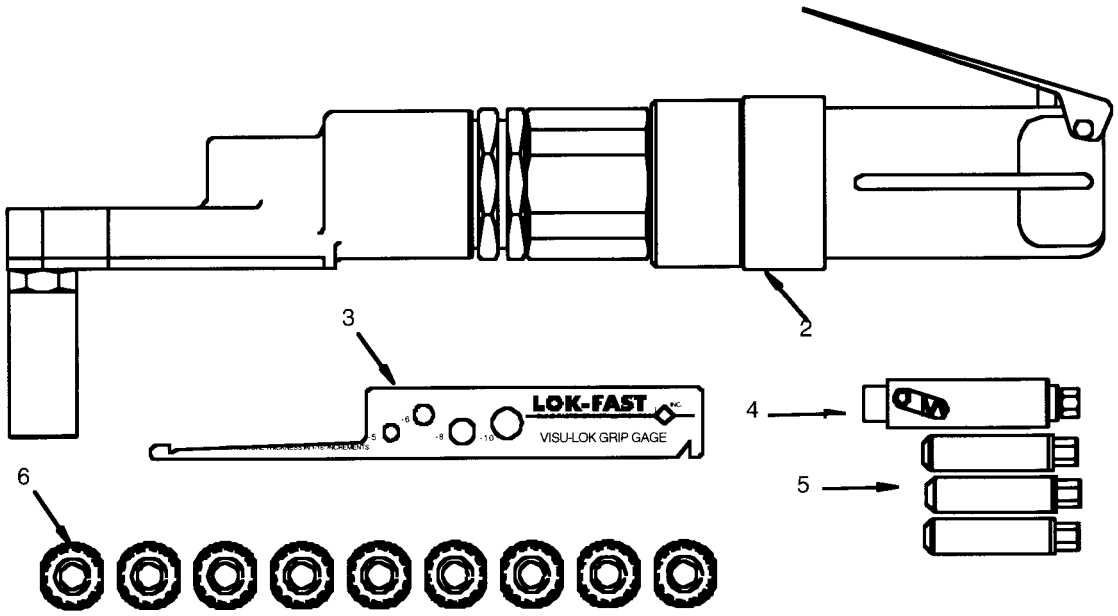

Item	Part #	Description
1	4020-4	Tool Box
2	7440M-BF	Complete Driver Assy.l
3	LFCLG-1	Composi-Lok Grip Gauge
4	MTD502-BF	Master Torque Driver
5	TD5651-BF	Fastener Driver -5
	TD5001-BF	Fastener Driver -6
	TD5601-BF	Fastener Driver -8
6	TD5652T-BF	Reduced Flush Nose -5

Item	Part #	Description
6	TD5652P-BF	Protruding Nose 5
	TD5652-BF	Flush -5
	TD5002T-BF	Reduced Flush Nose -6
	TD5002P-BF	Protruding Nose -6
	TD5002-BF	Flush Nose -6
	TD5602T-BF	Reduced Flush Nose -8
	TD5602P-BF	Protruding Nose -8
	TD5602-BF	Flush Nose -8

Trennschleifer für Nietstifte
RIVET STEM SHAVER

Corebolt break-off shaving & milling tools designed for use with Visu-Lok, Composi-Lok & Radial-Lok fasteners which must meet flushness requirements.

1

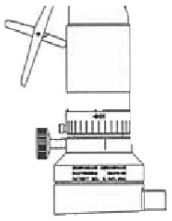

2

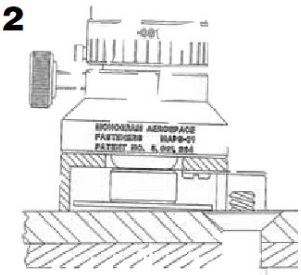

- 30,000 rpm promotes swift corebolt "slicing"·
- Lightweight
- One handed operation
- Cutting depth increments of .001"
- Precision set up with use of new depth adjustment gage

Trennschleifer für überstehende Nietschifte nach Abriss. Speziell für Visu-Lok, Composi-Lok & Radial-Lok Nieten.

- 30,000 UpM für schnelles und sicheres Arbeiten
- leichtes Design
- mit einer Hand bedienbar
- tiefenverstellbar in Stufen von .001" (0,025mm)
- einfache Einstellung durch Präzisions-Einstellring

3

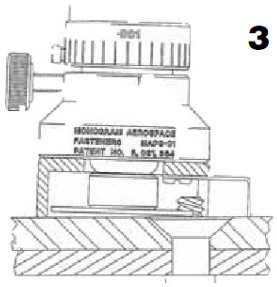

4

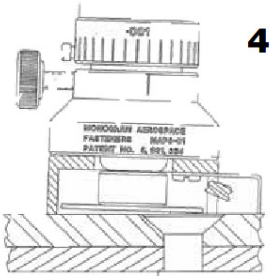



MAPS-01

MAPSD-01
Trennscheibe
GRINDING DISC



Nietstiftfräser
PINTAIL MILLING UNIT



Features

- Ideal for milling corebolts on recessed fasteners
- Operates with any drill motor
- .001 " cutting increments
- Locating nibs on nose piece help prevent drifting while cutting
- Compact design fits in the palm of your hand

Eigenschaften

- Ideal um tiefsitzende Nietstifte abzufräsen
- funktioniert mit jeder Bohrmaschine
- Schneidtiefe in .001 " Schritten einstellbar
- kleine Ausbuchtungen an der Spitze helfen bei der Zentrierung
- handliches Design

Nietdurchmesser FASTENER DIAMETER	**Komplettes Werkzeug** COMPLETE TOOL	**Bohrer** MILLER CUTTER
		
-5 (5/32)	MAPM-01-05AA	MAPM-05-05
-6 (3/16)	MAPM-01-06AA	MAPM-05-06
-7 (7/32)	MAPM-01-07AA	MAPM-05-07
-8 (1/4)	MAPM-01-08AA	MAPM-05-08
-9 (9/32)	MAPM-01-09AA	MAPM-05-09
-10 (5/16)	MAPM-01-10AA	MAPM-05-10
-11 (11/32)	MAPM-01-11AA	MAPM-05-11
-12 (3/8)	MAPM-01-12AA	MAPM-05-12

Optisches Tiefen-Micrometer
OPITCAL DEPTH MICROMETER

BASIC MODELS 966 & 966A



RETICLE EYEPIECE CELL
This eyepiece is available for use with Optical Micrometer Model 966A (200 power). It allows the Micrometer to become an optical comparator, capable of making accurate width measurements up to .040 inch with increments of .001 inch.

EASY TO OPERATE
The easy-to-read vernier scale in US Customary Measurement Units has a resolution of .0001 inch.

LED LIGHT AND LIGHT ADAPTER
Reading can be made easier and clearer by the use of the optional battery-powered light and adapter.
This two-piece unit consists of an adjustable bracket that fits all bases and a light unit that highlights the spot to be viewed.

TRIPOD BASE
The tripod base is standard equipment for both Optical Micrometer models. It is used for all primary flat and simple curved surfaces and affords the greatest utility.

INTERCHANGEABLE OPTICS
There are interchangeable optics available for both models. This means that Model 966 (100 power) can be converted to Model 966A (200 power) through the use of the interchangeable optics … and visa versa.

Model 966 contains a 100 power Optical Micrometer with a standard tripod base is an instrument case. It is recommended when greater working depth is required. It measures depths up to .6650 inch and a height above the surface of .1000 inch. Measure transparent materials up to .9975 inch. It's field of view is .090 dia. and it is accurate to +/- .0005 inch.

Model 966A contains a 200 power Optical Micrometer with a standard tripod base in an instrument case. It measures depths up to .2600 inch and a height above the surface of .1000 inch. Measure transparent materials up to .3900 inch. It's field of view is .060 dia. It is accurate to +/- .0002 inch.

OPTIONAL MICROMETER BASES
Each separate base is designed for specific Positioning or application on particular types of surface.



P/N 972
OFFSET TRIPOD
BASE For flat or curved surfaces adjacent to protrusions.



P/N 974
TRANSLUCENT V-BLOCK BASE
For round surfaces or outside angles. Also for flat surfaces adjacent to recessed areas.



P/N 971
LARGE TRIPOD BASE
For small parts, up to 2 inches in height.



P/N 971
QUADPOD BASE
For convex and/or concave irregular cured surfaces.



P/N 973
WEDGE BIPOD BASE
For areas located inside angles of at least 80°.

Micrometer Kit Model 966A1



Model 966A1 contains an Optical Micrometer and all accessories, including interchangeable optics (100/200 power), six interchangeable bases, reticle eyepiece, micrometer light, batteries and adapter in an instrument case.

1. Optical Micrometer Model 966A (200 Power)
2. 20X Eyepiece Cell (P/N 989)
3. 15X Reticle Eyepiece Cell (P/N 966AR)
4. 10X Objective Optic Cell (P/N 966AC)
5. 5X Objective Optic Cell (P/N 966C)
6. LED Micrometer Light (P/N 961)
7. Micrometer Light Adapter (P/N 962)
8. Standard Tripod Base (P/N 970)
9. Quadpod Base (P/N 971)
10. Offset Tripod Base (P/N 972)
11. Wedge Bipod Base (P/N 973)
12. Translucent V-Block Base (P/N 974)
13. Large Tripod Base (P/N 975)
14. Allen Wrench (P/N 984)
15. Instrument Kit Case (P/N 977)

HALOSENSOR®
Drill Position Targeting System for Aircraft Manufacture & MRO



- Locate hole position from outside the aircraft skin
- Used in the manufacture of all Airbus aircraft
- An alternative to back drilling
- High accuracy levels
- Reduces concessions and waste
- Simple to use; robust in harsh production environments
- All new custom display system

Hand held system
- 1 sensor head, drill block and vacuum -system
- 1 targeting computer and mount
- 1 power supply box
- 1 charger
- All cables and mounts required for use

(shop air connector not supplied due to variety)

Part Number	Power (Full Charge)	Range	Accuracy	Color
HEHS00003	Up to 40 hours use	Up to 55 mm (2”)	Up to 0.1 mm (0.004”)	Yellow (1)
HEHS00003CTE	Up to 24 hours use	Up to 55 mm (2”)	Up to 0.1 mm (0.004”)	Blue (2)
HEHS8500001	Up to 24 hours use	Up to 100 mm (4”)	Up to 0.1 mm (0.004”)	Red (3)

(1) The yellow HALOSENSOR V3 system the standard product designed for drill position targeting on large structures.

(2) The blue HALOSENSOR CTE system is designed to work as per standard systems but can target drill positions within 15 mm of the structure edge. Normally used in conjunction with the standard yellow or red systems.

(3) The red HALOSENSOR V4 system is a long range version of the standard yellow through skin sensor. This system allows sensing over 100 mm through aluminium, carbon composite, titanium, stainless steel and any non ferrous materials.

HALOSENSOR® NANO System



The rugged HALOSENSOR range includes the NANO devices that, being smaller, can cope with tighter radius curved surfaces or situations of limited access.
The standard range can accurately locate blind holes from 2 mm to 100 mm. A custom design and manufacture service is available for even more specialised applications.

- small footprint through skin sensor system
- designed for easy single handed operation
- can be used in tight curves and close to the edge of panels

Part Number	Power (Full Charge)	Range	Accuracy	Color
HEHSTSSNANO001	Up to 24 hours use	Up to 100 mm (4")	Up to 0.1 mm (0.004”)	Orange



Senklehren
COUNTERSINK GAGES

Countersink Depth Gages

Part Number: SR901-XXX-XX



Features:

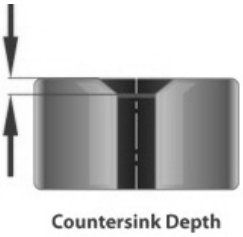

- Measuring accuracy .0001 inch (.0025mm)
- Direct contact inside the countersink walls
- Direct reading, no calculations or charts necessary
- Large base configurations available for curved surfaces
- Accurate, repeatable and reproducible
- SPC ready via data port cable
- Ease of use with minimal training
- Eliminate costly rework
- Gage and set block calibrated to NIST traceable standards
- Unique serial numbers on gages, set blocks and indicators
- The components of our gages are made of heat treated wear resistant tool steels and micro finished to ensure accurate and trouble free operation

1. "A" Countersink included angle: _____
2. "B" Hole diameter through: _____
3. "C" Countersink major diameter: _____
4. "D" Depth of the countersink: _____
5. "R" Transition radius: _____
6. Fastener part number and/or specification: _____
7. Surface curvature: _____
8. Size, thickness and position of any drilling jig or fixture to measure through: _____

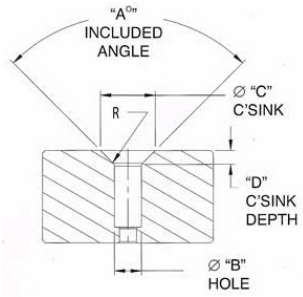

SRX01 - XXX - XX

BODY STYLE:	GAGE NUMBER:	HOLE SIZE:	BASE STYLE:
8 = STRAIGHT **9** = FLANGED	ASSIGNED IN SEQUENCE BY TRIO	CAN BE THE SAME AS THE FASTENER SIZE, THE EXACT DECIMAL SIZE OR ANY NUMBER	**T** = TRIPOD **B** = BIPOD **Q** = QUADPOD **S** = SPECIAL

Digital Indicator Features:

- LCD display with rotating bezel
- Inch/ mm mode toggle capable
- SPC data output ready via data port
- Upper and lower tolerance capable
- User selectable resolution

Countersink Diameter Gages

Part Number: SR900-XXX-XX



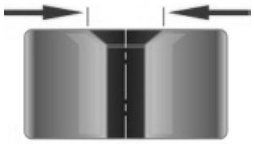

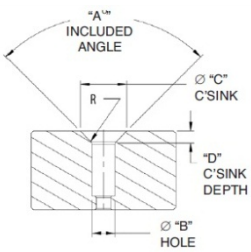

Features:

- Measuring accuracy .00025 inch (.006mm)
- Direct contact on the major countersink diameter
- Direct reading, no calculations or charts necessary
- Large base configurations available for curved surfaces
- Accurate, repeatable and reproducible
- SPC ready via data port cable
- Ease of use with minimal training
- Eliminate costly rework
- Gage and set block calibrated to NIST traceable standards
- Unique serial numbers on gages, set blocks and indicators
- The components of our gages are made of heat treated wear resistant tool steels and micro finished to ensure accurate and trouble free operation

1. "A" Countersink included angle: _____
2. "B" Hole diameter through: _____
3. "C" Countersink major diameter: _____
4. "D" Depth of the countersink: _____
5. "R" Transition radius: _____
6. Fastener part number and/or specification: _____
7. Surface curvature: _____
8. Size, thickness and position of any drilling jig or fixture to measure through: _____

SRX00 - XXX - XX

BODY STYLE:	COUNTERSINK "A" INCULDED ANGLE:	DIAMETER "C" RANGE:	BASE STYLE:
8 = STRAIGHT **9** = FLANGED	60° 82° 90° 100° 120° 130° 135° 140° 150°	0 = .020-.170 in/ 0.50- 4.32 mm 1 = .160-.360 in/ 4.06- 9.15 mm 2 = .360-.560 in/ 9.14-14.25 mm 3 = .560-.780 in/ 14.22-19.82 mm 4 = .780-1.00 in/ 19.81-25.40 mm 5 = 1.00-1.25 in/ 25.40-31.75 mm 6 = 1.25-1.56 in/ 31.75-39.63 mm	**T** = TRIPOD **B** = BIPOD **Q** = QUADPOD **S** = SPECIAL

Many other Models are available on request.

Senklehren
COUNTERSINK GAGES

Perpendicularity Gages





Perpendicularity

Part Number: PG900-2-1

WITH CLOSE FITTED QUICK CONNECTING PROBES

Features:

- Measuring Range 0.0 to 5.5 Degrees Easy To Use, Fast, Accurate and Repeatable
- Works on Flat and Curved Surfaces
- Works Through Drilling Templates
- Direct Reading Digital Display
- Ideal for SPC
- Quick Connecting/Disconnecting Hole Probes
- Interchangeable Gage Bases

Angle:	0.0 to 5.5”
Diameter:	.0500” to 1.5000” Interchangeable probes.
Accuracy:	0.1 decimal degree (6 min.)
Resolution:	0.1 decimal degree (6 min.)
Repeatability:	0.1 decimal degree (6 min.)
Weight:	2.2 lbs/ 1.0 kg

The basic instrument includes: Mahr-Federal XLS indicator, the gage body, one quick connect/disconnect hole probe and a gage calibration block.

Basic gage with .2500” hole diameter probe and 5.0° angle block

Flushness Gages



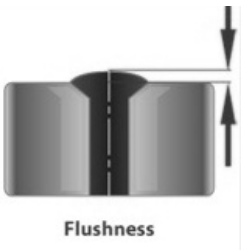

Flushness

Part Number: FR900

Features:

- Measuring accuracy .0001 inch (.0025mm)
- Direct contact with the stylus allows pin point selection of the protrusion measurement
- Direct reading, no calculations or charts necessary
- Accurate, repeatable and reproducible
- SPC ready via data port cable
- Ease of use with minimal training
- Eliminate costly rework
- Gage and set block calibrated to NIST traceable standards
- Unique serial numbers on gages, set blocks and indicators
- The components of our gages are made of heat treated wear resistant tool steels and micro finished to ensure accurate and trouble free operation

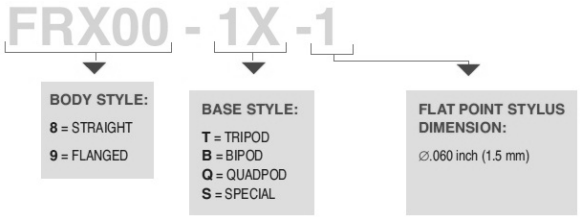

1. “F” Fastener head diameter: _____
2. “C” Countersink major diameter: _____
3. Fastener part number and/or specification: _____
4. Surface curvature: _____

Digital Indicator Features:

- LCD display with rotating bezel
- Inch/ mm mode toggle capable
- SPC data output ready via data port
- Upper and lower tolerance capable
- User selectable resolution

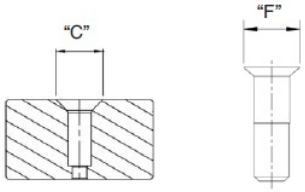

Many other Models are available on request.

Installing and Removal Tools for Electrical Connector Contacts

Mil Spec Composition B & C

Installing/Removal Tool - Plastic body metal composition

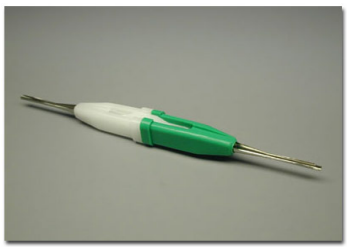

Part-Number	Color-Code	Size	Connector Series
M81969/1-01	Green/White	22	MIL-C-24308
M81969/1-02	Red/White	20	MIL-C-81659
M81969/1-03	Blue/White	16	
M81969/1-04	Green/White	22D	

Installing/Removal Tool - Plastic composition

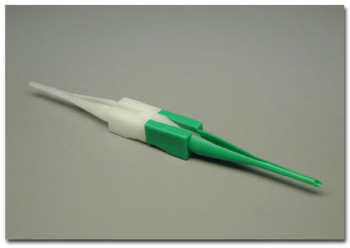

Part-Number	Color-Code	Size	Connector Series
			MIL-C-26482
M81969/14-01	Green/White	22D/M	MIL-C-81703
M81969/14-02	Red/White	20	MIL-C-83723
M81969/14-03	Blue/White	16	MIL-C-38999
M81969/14-04	Yellow/White	12	MIL-T-81714
M81969/14-05	Gray/White	10	MIL-C-38999

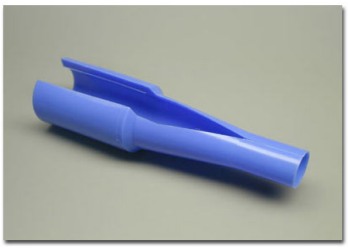

Part-Number	Color-Code	Size	Connector Series
			MIL-C-26482
M81969/14-06	Red	8	MIL-C-81703
M81969/14-07	Blue	4	MIL-C-83723
M81969/14-08	Yellow	0	MIL-C-38999 *
			MIL-T-81714
			MIL-C-5015
			* Not for Size 8 !

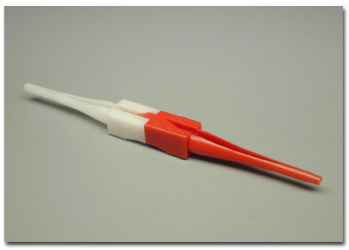

Part-Number	Color-Code	Size	Connector Series
M81969/14-09	Brown/White	22	MIL-C-55302/169/171
M81969/14-10	Red/Orange	20	MIL-C-38999
M81969/14-11	Red/White	20	MIL-C-26482
			MIL-C-81703
			MIL-C-83723
			MIL-T-81714
			MIL-C-5015



Part-Number	Color-Code	Size	Connector Series
M81969/14-12	Green	8	MIL-C-38999



Part-Number	Color-Code	Size	Connector Series
M81969/16-01	Red/White	20	MIL-C-81511 Series 3 & 4
M81969/16-02	Blue/White	16	
M81969/16-03	Yellow/White	12	

Installing and Removal Tools for Electrical Connector Contacts

Mil Spec Composition B & C

Installing/Removal Tool - Plastic composition

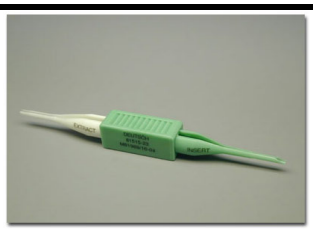

Part-Number	Color-Code	Size	Connector Series
M81969/16-04	Green/White	23	MIL-C-81511 Series 3 & 4



Part-Number	Color-Code	Size	Connector Series
M81969/39-01	Green/White	20	MIL-C-24308
			MIL-C-81659
MS27534-12	Yellow/White	12	MIL-C-26482
MS27534-16	Blue/White	16	MIL-C-81703
MS27534-20	Red/White	20	MIL-C-83723
MS27534-22D	Green/White	22D/M	MIL-C-38999
			MIL-T-81714
			MIL-C-5015



Part-Number	Color-Code	Size	Connector Series
			MIL-C-26482
M81969/29-02	Red	8	MIL-C-81703
			MIL-C-83723
			MIL-C-38999
			MIL-T-81714
			MIL-C-5015



Part-Number	Color-Code	Size	Connector Series
			MIL-C-26482
M15570-20-1 **	Red/White	20	MIL-C-83723
			MIL-C-38999
			MIL-T-81714
** Has Insertion Depth Line for use with Deutsch Connectors !			
			MIL-C-815111 and
M15570-22-1	Yellow/White	22	Deutsch Sub Miniature
			Types RE, RSM,RTK, etc.

Removal Tool - Plastic composition



Part-Number	Color-Code	Size	Connector Series
ACET20-11	Green	20	MIL-C-24308
ACET20-15 **	Green	20	MIL-C-81659
			As well as Cannon and
** Removes Pin/Soc Contacts with overzised wire inculation !			Matrix Equivalents

Removal Tool Probe Tip - Plastic composition



Part-Number	Color-Code	Size	Connector Series
MS3448-001A	Red	20	MIL-C-26482
MS3448-001B	Blue	16	MIL-C-81703
MS3448-001C	Yellow	12	MIL-C-83723
			MIL-C-83733
			MIL-C-815111 Class L
			MIL-C-5015

37° Kelchwerkzeuge

37° FLARING TOOLS



437-FB

37° FLARING TOOL
For 3/16", 1/4", 5/16", 3/8", 1/2" and 5/8" O.D. tubing.

437-FB For use with soft copper, aluminum and brass tubing. Hardened steel chrome finished cone makes exceptionally smooth, high strength flares with a radius at base of flare – instead of the sharp angle formed by ordinary tools. New slip-on yoke permits use in tight quarters, allows flaring where there is little space between nut and tube end. New feed screw design provides smooth, easier operation. Positive gripping and self-gauging of tube for exact flare size. Sliding die blocks lock in place by clamp action. Satin chrome and black finish. Wt. 1.75 lbs.

Forms Stronger Flares
Stronger flares assured by smooth, even radius formed at base of every flare by engineered chamfer.





Self-Gauging
Just insert tube flush with top of die for accurate flare size.

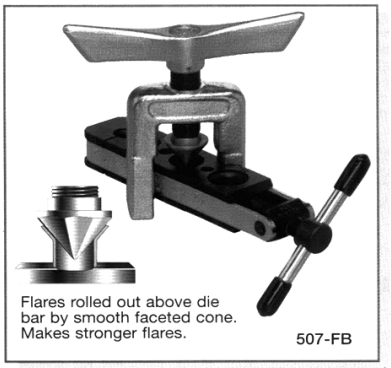
Flares rolled out above die bar by smooth faceted cone. Makes stronger flares.
507-FB

37° ROL-AIR® FLARING TOOL
For 3/16", 1/4", 5/16", 3/8", 1/2" and 5/8" O.D. tubing.

507-FB For use with soft copper, aluminum and brass tubing. Faceted, hard chrome finished cone rolls out perfect 37° flares above die block-then automatically burnishes flare face. Original wall thickness is maintained at base of flare. New slip-on yoke permits use in tight quarters where there is little space between nut and tube end. Larger handle, with better leverage, and precision threads on feed screw make flaring effortless. Heat treated dies firmly grip tubing. Satin chrome and black nickel finish.
Wt. 1.75 lbs.

METRIC SIZE 37° ROL-AIR® FLARING TOOL
507-FBM Metric 37° Rol-Air® flaring tool. Same as 507-FB except tor metric size tubing 6mm, 8mm, 10mm, 12mm, 14mm, 15mm O.D. tubing.

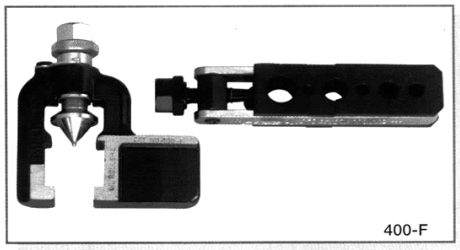
400-F

37° ROL AIR® FLARING TOOLS
For 3/16", 1/4", 5/16", 3/8", 1/2" and 5/8" O.D. tubing.

400-F Forms 37° flares to Government Specifications in steel, stainless steel (including MIL-T-6845), titanium and other metal tubing. Positive stop gauge assures correct size of flare. Special burnishing action polishes flare face. Three rollers in flaring cone roll out 37° flare above die block. Roller action cuts effort required; maintains original wall thickness-eliminates stress concentration. Extension on yoke for clamping in vise. Satin chrome and black nickel finish. Furnished in sturdy tool case. Wt. 2.5 lbs.

401-FA Reaming yoke for 1/4" to 5/8" O.D. tubing. Recommended for use with steel and stainless steel tubing for proper flaring. Wt. 0.7 lbs.

402-FA Flaring and reaming kit. Contains No. 400-F Flaring Tool and No.401-FA Reaming Yoke for 1/4" to 5/8" O.D. tubing. In tool case. Wt. 3.2 lbs.

Conforms to Federal Specification GGG-F-451a. Type 1, Class 1, Style A.

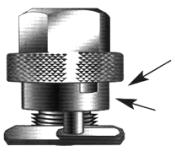
Feed release and burnishing mechanism

Flare control gauge

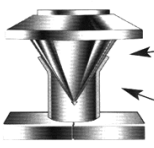
3 rollers in flaring cone.

Flare formed above die block


Feed screw controls depth of reaming

401-FA

37° Kelchwerkzeuge

37° FLARING TOOLS



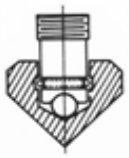

Ball thrust bearing in flaring cone minimizes friction, makes operation easier.

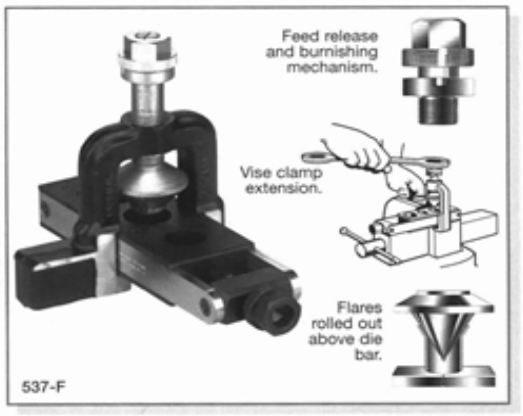

37° HEAVY DUTY FLARING TOOL
For 1/8", 3/16", 1/4", 5/16", 3/8", and 1/2" O.D. tubing.

447-F Forms 37° flares in annealed stainless steel (MIL-T-6345 or AMS5566), cold drawn stainless steel and annealed copper or aluminum tubing. Built to withstand continuous rugged service. Ball thrust bearing mechanism reduces effort required. Hardened tool steel die features non-slip grip of tubing, even after repetitive flaring. Bar has vise extension. Wt. 3.25 lbs.

LARGE SIZE 37° ROL-AIR® FLARING TOOLS
For 3/4", 7/8", 1", 1-1/4", 1-1/2" and 2" O.D. tubing.

Three cylinders in flaring cone roll out 37° flare above die block. Flares soft steel, copper, aluminum and fully annealed stainless steel tubing. Roller action cuts effort required; maintains original wall thickness; eliminates stress concentration. Feed release and burnishing action. Vise clamp extension on yoke. Heat treated dies clamp tubing without marking it. Satin chrome and black nickel finish. Furnished in tool case.

537-F Flares and burnishes 3/4", 7/8", 1", and 1-1/4" O.D. tubing. Wt. 13.0 lbs.

637-F Flares and burnishes 1-1/4", 1-1/2", and 2" O.D. tubing. Wt. 13.0 lbs.

*Conforms to Federal Specification GGG-F-451a,Type 1, Class 1, Style B.

37° PRECISION FLARING TOOL
For 1/8", 3/16", 1/4", 5/16", 3/8", 1/2", 5/8", 3/4", 1", 1-1/4" and 1-1/2'' O.D. tubing.

Rohr-Endbearbeitungsmaschinen
TUBE/PIPE END-FINISHING MACHINES





2-CPV



3-CPV

CAPACITY RANGE FOR END-FINISHING MACHINES

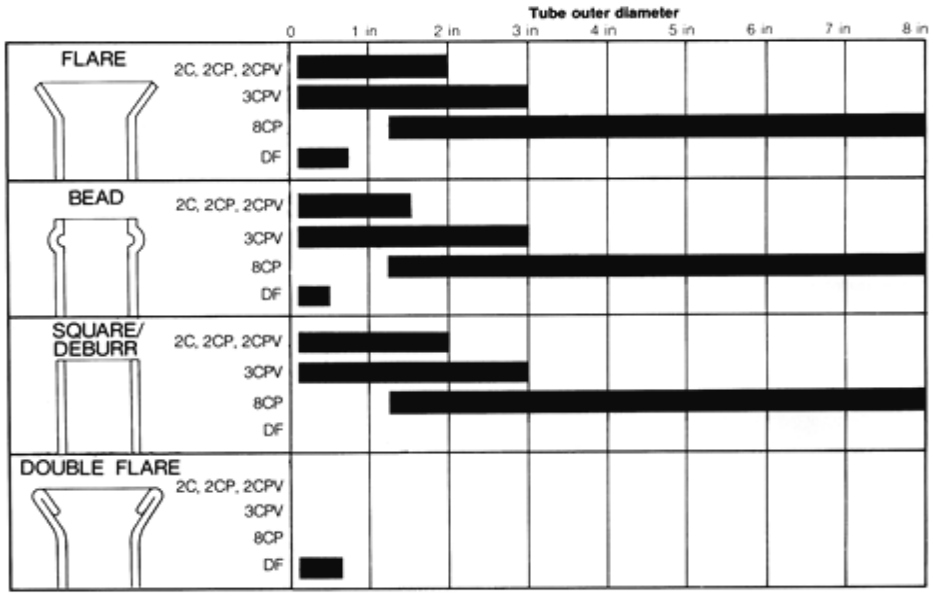

Nähere Angaben auf Anfrage / MORE INFORMATION ON REQUEST !

Hartmetall-Entgratmesser
CARBIDE DEBURRING BLADES

Dicke 1,59 mm / THICKNESS 1/16"

Zur Verwendung in Entgratköpfen / USED IN CONJUNCTION WITH SQUARING & DEBURRING HEADS



437C-1	437C-2	437C-3

Beschreibung	DESCRIPTION	**Art.Nr**./PART-NO.
kpl. Satz	CPL. SET	**437C**
Plan-Messer	SQUARE BLADE	**437C-1**
Innen-Messer	INSIDE BLADE	**437C-2**
Aussen-Messer	OUTSIDE BLADE	**437C-3**

SEILHÄMMERGERÄT FÜR SEILSCHUHE
CABLE SWAGING TOOLS

	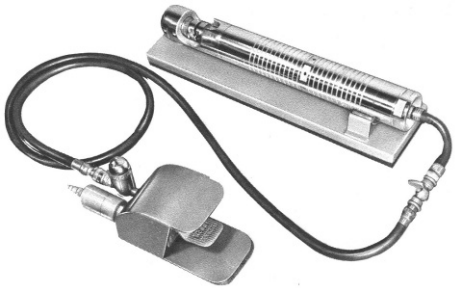	
520JK	**520J**	**520SG**
Werkzeugsatz zum Pressen von Seilschuhen, bestehend aus: **Werkzeugkiste, Seilhämmergerät 520J, Lehre 520SG und alle nachfolgend aufgeführten Einsätze.** CABLE SWAGER KIT EXIST OF: TOOL-BOX, SWAGER 520J, GAGE 520SG AND ALL DIES AS PER FOLLOWING LIST.	**Pneumatisches Seilhämmergerät** PNEUMATIC CABLE SWAGER	**Prüflehre** SWAGING GAUGE

Für Seilschuhe mit Kugel und Doppelschaftenden

FOR DOUBLE SHANK BALL END TERMINALS

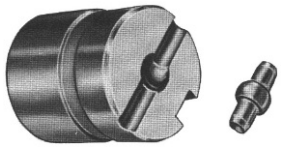

Artikel-Nr. PART NO.	Seilmaß CABLE DIA	Seilschuh Ref. TERMINAL REF.
520CDB-2	1/16"	MS20663-2
520CDB-3	3/32"	MS20663-3
520CDB-4	1/8"	MS20663-4
520CDB-5	5/32"	MS20663-5
520CDB-6	3/16"	MS20663-6

Für Seilschuhe mit Kugel und Einfachschaftende

FOR SINGLE SHANK BALL END TERMINALS

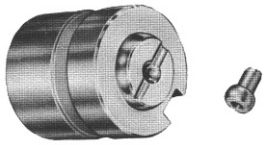

520CSB-2	1/16"	MS20664-2
520CSB-3	3/32"	MS20664-3
520CSB-4	1/8"	MS20664-4
520CSB-5	5/32"	MS20664-5
520CSB-6	3/16"	MS20664-6

Für Seilschuhe mit einfacher Kugel

FOR PLAIN BALL END TERMINALS

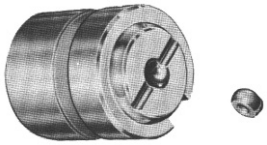

520CB-2	1/16"	RA2487
520CB-3	3/32"	RA2487
520CB-4	1/8"	RA2487

Für Seilschuhe mit Zylinderschaftenden

FOR SLEEVE TYPE TERMINALS

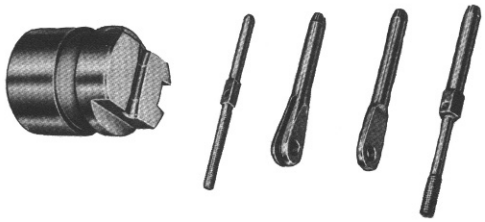

520CS-2	1/16"	-2
520CS-3	3/32"	-3
520CS-4	1/8"	-4
520CS-5	5/32"	-5
520CS-6	3/16"	-6
520CS-7	7/32"	-7
520CS-8	1 /4"	-8

Einsätze zum Ablängen von Kabeln ***

CABLE CUT-OFF AND TRIM DIES ***

****

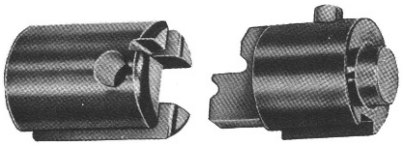

Matritze Nr. DIE NO.	Seilmaß CABLE DIA.	Stempel Nr. CUTTER NO.
520CD-2	1/16"	**520CP-2**
520CD-3	3/32"	**520CP-3**
520CD-4	1/8"	**520CP-4**
520CD-5	5/32"	**520CP-5**
520CD-6	3/16"	**520CP-6**
520CD-7	7/32"	**520CP-7**
520CD-8	1 /4"	**520CP-8**

***** Einsätze zum Ablängen werden einzeln verkauft, übrige Einsätze paarweise.**
ALL SWAGING DIES SOLD IN PAIRS. TRIM DIES SOLD INDIVIDUALLY

Zugfestigkeitstester für Seilschuhe
SWAGED CABLE TERMINAL PULL TESTER KIT

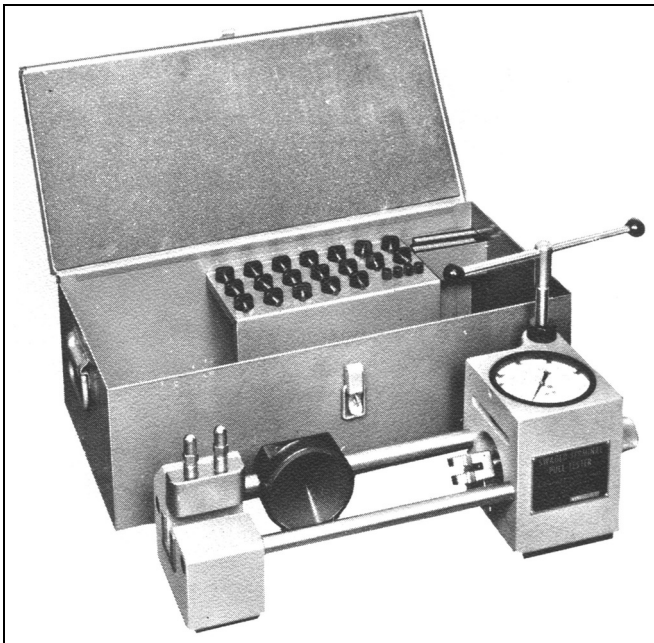

520CT
Testgerät einzeln
PULL TESTER ONLY

520CTK
Zugfestgkeitstester-Satz
PULL TESTER KIT

Bestehend aus: / EXIST OF:

Artikel-Nr. PART NO.	**Beschreibung**	**DESCRIPTION**
520 CT	Prüfgerät mit Handgriff und Backenhalter	PULL TESTER WITH HANDLE AND JAW HOLDER
520 CTB	Aufbewahrungskasten	CARRYING CASE
520 CTD-1	Block	BLOCK
520 CTD-2	Backen für 1/16" Kabeldurchmesser (1,59 mm)	JAWS FOR 1/16" CABLE DIAMETER
520 CTD-3	Backen für 3/32" Kabeldurchmesser (2,38 mm)	JAWS FOR 3/32" CABLE DIAMETER
520 CTD-4	Backen für 1/8" Kabeldurchmesser (3,18 mm)	JAWS FOR 1/8" CABLE DIAMETER
520 CTD-5	Backen für 5/32" Kabeldurchmesser (3,97 mm)	JAWS FOR 5/32" CABLE DIAMETER
520 CTD-6	Backen für 3/16" Kabeldurchmesser (4,76 mm)	JAWS FOR 3/16" CABLE DIAMETER
520 CTD-7	Backen für 7/32" Kabeldurchmesser (5,56 mm)	JAWS FOR 7/32" CABLE DIAMETER
520 CTD-8	Backen für 1/4" Kabeldurchmesser (6,35 mm)	JAWS FOR 1/4" CABLE DIAMETER
520 CTF-5	Adapter für 5/32" AN667 Seilschuhe	ADAPTER FOR 5/32" AN667 TERMINAL
520 CTF-6	Adapter für 3/16" AN667 Seilschuhe	ADAPTER FOR 3/16" AN667 TERMINAL
520 CTF-7	Adapter für 7/32" AN667 Seilschuhe	ADAPTER FOR 7/32" AN667 TERMINAL
520 CTF-8	Adapter für 1/4" AN667 Seilschuhe	ADAPTER FOR 1/4" AN667 TERMINAL
520 CTS-2	Adapter für 1/16" AN663 & AN664 Seilschuhe	ADAPTER FOR 1/16" AN663 & AN664 TERMINAL
520 CTS-3	Adapter für 3/32" AN663 & AN664 Seilschuhe	ADAPTER FOR 3/32" AN663 & AN664 TERMINAL
520 CTS-4	Adapter für 1/8" AN663 & AN664 Seilschuhe	ADAPTER FOR 1/8" AN663 & AN664 TERMINAL
520 CTS-5	Adapter für 5/32" AN663 & AN664 Seilschuhe	ADAPTER FOR 5/32" AN663 & AN664 TERMINAL
520 CTS-6	Adapter für 3/16" AN663 & AN664 Seilschuhe	ADAPTER FOR 3/16" AN663 & AN664 TERMINAL
520 CTT-2	Adapter für 1/16" AN666 & AN669 Seilschuhe Re.	ADAPTER FOR 1/16" AN666 & AN669 TERMINAL RH TA´D
520 CTT-3	Adapter für 3/32" AN666 & AN669 Seilschuhe Re.	ADAPTER FOR 3/32" AN666 & AN669 TERMINAL RH TA´D
520 CTT-4	Adapter für 1/8" AN666 & AN669 Seilschuhe Re.	ADAPTER FOR 1/8" AN666 & AN669 TERMINAL RH TA´D
520 CTT-4	Adapter für 5/32" AN666 & AN669 Seilschuhe Re.	ADAPTER FOR 5/32" AN666 & AN669 TERMINAL RH TA´D
520 CTT-6	Adapter für 3/16" AN666 & AN669 Seilschuhe Re.	ADAPTER FOR 3/16" AN666 & AN669 TERMINAL RH TA´D
520 CTT-7	Adapter für 7/32" AN666 & AN669 Seilschuhe Re.	ADAPTER FOR 7/16" AN666 & AN669 TERMINAL RH TA´D
520 CTT-20	Adapter für 1/16" AN666 & AN669 Seilschuhe Li.	ADAPTER FOR 1/16" AN666 & AN669 TERMINAL LH TH´D
520 CTT-30	Adapter für 3/32" AN666 & AN669 Seilschuhe Li.	ADAPTER FOR 3/32" AN666 & AN669 TERMINAL LH TH´D
520 CTT-40	Adapter 1/8 & 5/32 AN666 & AN669 Seilschuhe Li.	ADAPTER 1/8 & 5/32 AN666 & AN669 TERMINAL LH TH´D
520 CTT-60	Adapter für 3/16" AN666 & AN669 Seilschuhe Li.	ADAPTER FOR 3/16" AN666 & AN669 TERMINAL LH TH´D
520 CTT-70	Adapter 1/4 & 7/32 AN666 & AN669 Seilschuhe Li.	ADAPTER 1/4 & 7/16" AN666 & AN669 TERMINAL LH TH´D
520 CTP-1	Stift 3/16" für AN667 & AN668 Seilschuhe	PIN 3/16" FOR AN667 & AN668 TERMINAL
520 CTP-2	Stift 1/4" für AN667 & AN668 Seilschuhe	PIN 1/4" FOR AN667 & AN668 TERMINAL
520 CTP-3	Stift 5/16" für AN667 & AN668 Seilschuhe	PIN 5/16" FOR AN667 & AN668 TERMINAL
520 CTP-4	Stift 3/8" für AN667 & AN668 Seilschuhe	PIN 3/8" FOR AN667 & AN668 TERMINAL

Backen werden paarweise gefertigt. Alle vorgenannten Teile sind einzeln erhältlich
JAWS ARE FURNISHED IN PAIRS. ALL LISTED ITEMS CAN BE PURCHASED SEPARATELY

Tragbares Gerät zum Aufpressen von Seilschuhen
PORTABLE SWAGING MACHINE KIT
LOCOLOC® Hand Swager Type 1 - Mod. M1-K

This portable, hand operated roll type swaging machine, shown below, will swage MS type terminals onto galvanized and stainless steel cables from 1/16" diameter up to and including 3/16" diameter. Marine-industrial terminals can also be assembled if the terminals have the same outside diameter and bore diameters as standard MS terminals before swaging. The LOCOLOC®-Kearney Type 1 Roll Swaging Kit, which includes the machine, guide adapters in a steel carrying and storage case, a full set of roll dies, terminal gauges, and feed is pictured and itemized below.

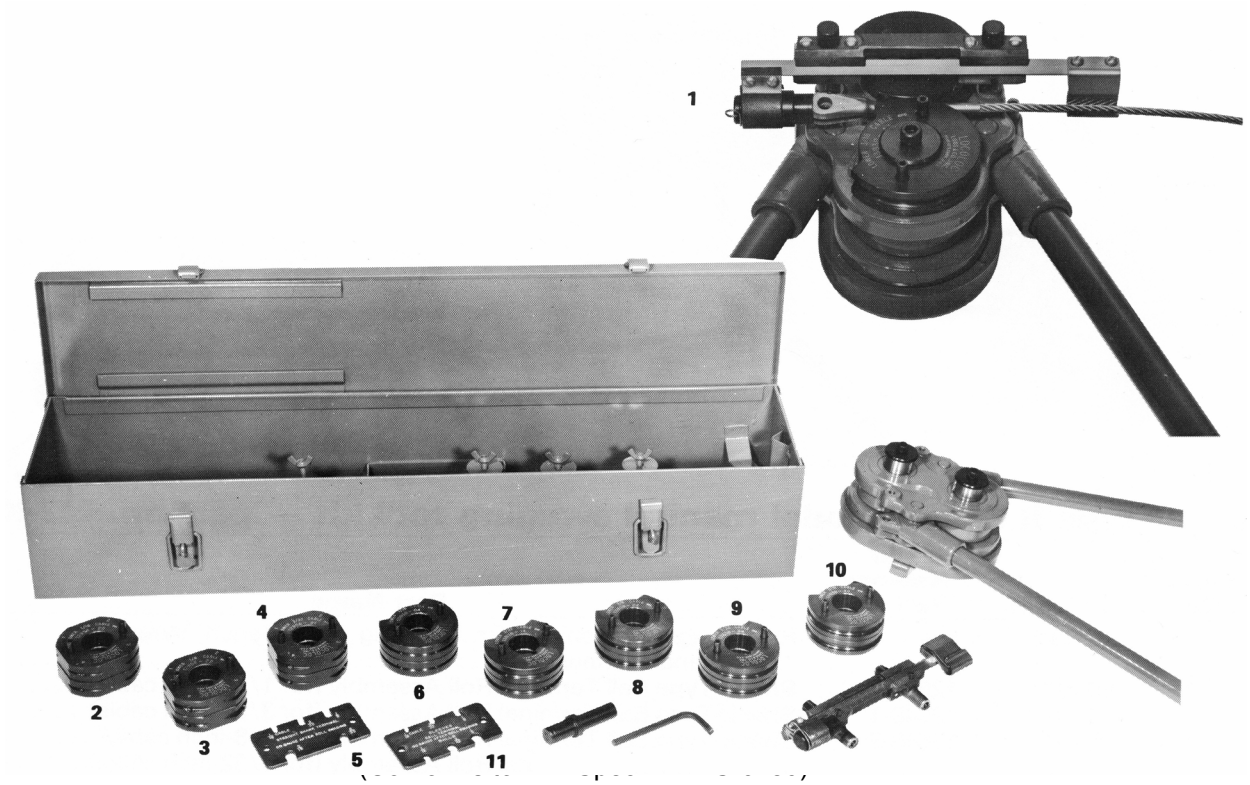

Index No.	Part No.	Old Kearney Part No.	Part Name	Qty.
1	M1 (74)	7-4	Swaging Machine with Case, Allen Wrench, Feed Guide Assembly and Feed Guide Adapters	1
2	M1-B2	12748-10	Shank-Type Ball Terminal Roll Assy. (for 1/16 inch cable)	1
3	M1-B3	12748-11	Shank-Type Ball Terminal Roll Assy. (for 3/32 inch cable)	1
4	M1-B4	12748-12	Shank-Type Ball Terminal Roll Assy. (for 1/8 inch cable)	1
5	GA-B24	12971-1	Ball-Type Terminal Gage (1/16-1/8 inch cable)	1
6	M1-S2	13655-7	Straight-Shank Terminal Roll Assy. (for 1/16 inch cable)	1
7	M1-S3	13655-17	Straight-Shank Terminal Roll Assy. (for 3/32 inch cable)	1
8	M1-S4	13655-27	Straight-Shank Terminal Roll Assy. (for 1/8 inch cable)	1
9	M1-S5	13655-37	Straight-Shank Terminal Roll Assy. (for 5/32 inch cable)	1
10	M1-S6	13655-47	Straight-Shank Terminal Roll Assy. (for 3/16 inch cable)	1
11	GA-S26	12971-2	Staight-Shank Terminal Gauge 1/16 - 3/ 16 inch cable)	1

LOCOLOC® -KEARNEY Portable Swaging Machine Kit (As illustrated) contains the following:
1 ea. M1 LOCOLOC®-KEARNEY Type 1 Portable Swaging Machine
3 ea. Ball Terminal Rolls (Dies) to fit 1/16", 3/32" & 1/8" Cable
5 ea. Shank Terminal Rolls (Dies) to fit 1/16", 3/32", 1/8", 5/32" & 3/16" Cable
1 ea. Gauge for Ball Terminals (Part No. GA-B24)
1 ea. Gauge for Straight Shank Terminals (Part No. GA-S26)
1 ea. Steel Carrying Case

PART NO. M1-K TYPE 1 PORTABLE SWAGING MACHINE KIT AS DESCRIBED ABOVE
(Shipping Wgt. appr. 64 lbs./ca. 29 kg)

Seilspannungs-Messgeräte
CABLE TENSIOMETER



T60 Series

Model No.	For use on Cables	Range in Lbs.	Riser Used
T60-1001-C8-1A	1/16, 3/32, 1/8	10 - 200	-
	5/32, 3/16	30 - 200	-
	7/32, 1/4	80 - 200	-
T60-1001-C9-1A	1/8, 5/32, 3/16, 7/32, 1/4	150 - 450	-
T60-1002-C8-00	3CWT, 5CWT, 10CWT	10 - 200	-
	15CWT, 25CWT	30 - 200	-
	35CWT, 45CWT	80 - 200	-

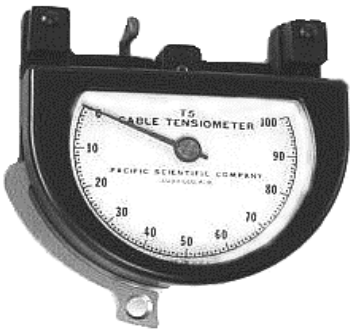

T5-2000 Series

Model No.	For use on Cables	Range in Lbs.	Riser Used
T5-2002-101-00	1/16, 3/32, 1/8	10 - 100	No. 1
	5/32, 3/16	15 - 150	No. 2C
	7/32, 1/4	25 - 150	No. 3
T5-2002-103-00	1/16, 3/32, 1/8	30 - 160	No. 1
	5/32, 3/16	30 - 200	No. 2C
	7/32, 1/4	30 - 150	No. 3
T5-2002-104-00	1/16, 3/32, 1/8	30 - 200	No. 1
	5/32, 3/16	30 - 300	No. 2C
	7/32, 1/4	30 - 300	No. 3
T5-2002-104A-00	1/16, 3/32	30 - 300	No. 1
	1/8, 5/32, 3/16	30 - 300	No. 2C
	7/32, 1/4	30 - 300	No. 3
T5-2002-105-00	1/16, 3/32, 1/8	30 - 200	No. 1
	5/32, 3/16	30 - 400	No. 2C
	7/32, 1/4	30 - 400	No. 3
T5-2002-301-00	3, 5, 10 (CWT)	10 - 100	No. 1
	15, 25 (CWT)	15 - 150	No. 2C
	35, 45 (CWT)	25 - 150	No. 3
T5-2002-304-00	3, 5, 10 (CWT)	30 - 200	No. 1
	15, 25 (CWT)	30 - 300	No. 2C
	35, 45 (CWT)	30 - 300	No. 3
T5-2002-401-00	1/16, 3/32, 1/8	10 - 100	No. 1
	5/32, 3/16	15 - 150	No. 2C
	7/32, 1/4	25 - 150	No. 3
	10, 15 (CWT)	5 - 100	No. 1
	15 (CWT)	5 - 150	No. 2C
	20, 25 (CWT)	5 - 150	No. 2C
	70 (CWT)	25 - 150	No. 3
T5-2004-113-00	1/16, 3/32, 1/8	10 - 100	No. 1
T5-2006-115-00	1/16	5 - 60	No. 1

Seilspannungs-Messgeräte
CABLE TENSIOMETER

Model No.	For use on Cables	Range in Lbs.	Riser Used
T5-8002-104B-00	1/16	5 - 300	No. 1
	3/32, 1/8	5 - 300	No. 2
	5/32, 3/16	5 - 300	No. 2C
	7/32, 1/4	5 - 300	No. 3A
T5-8002-105-00	1/16, 3/32, 1/8	30 - 200	No. 1
	5/32, 3/16	30 - 400	No. 2C
	7/32, 1/4	30 - 400	No. 3
T5-8002-211-00	1/16, 3/32, 1/8	35 - 350	No. 2
T5-8002-401-00	1/16, 3/32, 1/8	10 - 100	No. 1
	5/32, 3/16	15 - 150	No. 2C
	7/32, 1/4	25 - 150	No. 3
	10, 15 (CWT)	5 - 100	No. 1
	15 (CWT)	5 - 150	No. 2C
	20, 25 (CWT)	5 - 150	No. 2C
	70 (CWT)	25 - 150	No. 3
T5-8003-106-00	3/16, 7/32, 1/4	40 - 600	No. 2C
	5/16	40 - 600	No. 3A
T5-8003-107-00	3/16, 7/32, 1/4	100 - 800	No. 2C
	5/16	100 - 800	No. 3A
T5-8003-108-00	3/16, 7/32, 1/4	200 - 1000	No. 2C
	5/16	200 - 1000	No. 3A
T5-8003-209-00	1/4, 5/16, 3/8	200 - 400	No. 4
T5-8005-109-00	3/16	250 - 1300	No. 2
	7/32, 1/4	250 - 1300	No. 2C
	5/16	250 - 1300	No. 3A
T5-8005-110-00	3/16	300 - 1600	No. 2
	7/32, 1/4	300 - 1600	No. 2C
	5/16	300 - 1600	No. 3A
T5-8005-111-00	3/16	500 - 2000	No. 2
	7/32, 1/4	500 - 2000	No. 2C
T5-8008-106-00	1/8, 5/32	40 - 600	No. 2
	3/16	40 - 600	No. 2C
	1/4	40 - 600	No. 3
T5-8008-306-00	10, 15 (CWT)	40 - 600	No. 2
	25 (CWT)	40 - 600	No. 2C
	45 (CWT)	40 - 600	No. 3
T5-8103-406-00	3/16, 7/32, 1/4	40 - 600	No. 2C
	5/16	40 - 600	No. 3A
	5, 10, 15 (CWT)	25 - 125	No. 1
	20, 25 (CWT)	25 - 125	No. 2
	25 (CWT)	150 - 250	No. 2
	45 (CWT)	200 - 1400	No. 3A
	80 (CWT)	200 - 600	No. 3A
	80 (CWT)	600 - 1400	No. 3B
T5-8203-108-00	3/8	200 - 1000	No. 3B

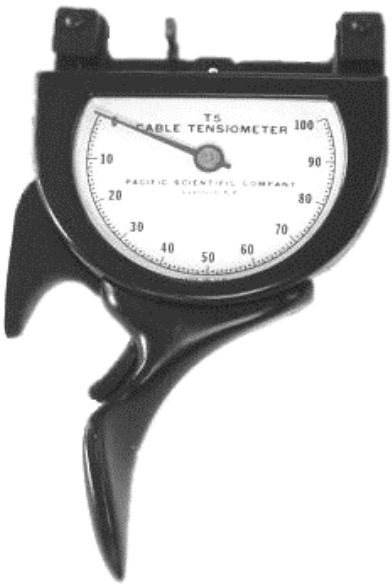

T5-8000 Series

Heli-Coil - Handeinbauwerkzeuge
HELI-COIL HAND INSERTING TOOLS

TABLE IX — HELI-COIL HAND INSERTING TOOLS

NOMINAL THREAD SIZE	HAND INSERTING TOOLS 3 Dia. Lengths Thru 7/8 2 Dia. Lengths 1" and up
UNIFIED COARSE	
2 (.086)-56	551-02
3 (.099)-48	551-03
4 (.112)-40*	7551-04
5 (.125)-40	7551-05
6 (.138)-32	7551-06
8 (.164)-32*	7551-2
10 (.190)-24*	7551-3
12 (.216)-24	7551-1
1/4 (.2500)-20	7551-4
5/16 (.3125)-18	7551-5
3/8 (.3750)-16	7551-6
7/16 (.4375)-14	7551-7
1/2 (.5000)-13	7551-8
9/16 (.5625)-12	3724-9
5/8 (.6250)-11	3724-10
3/4 (.7500)-10	3724-12
7/8 (.8750)- 9	3724-14
1 (1.0000)- 8	3724-16
1-1/8 (1.1250)- 7	3724-18
1-1/4 (1.2500)- 7	3724-20
1-3/8 (1.3750)- 6	3724-22
1-1/2 (1.5000)- 6	3724-24

NOMINAL THREAD SIZE	HAND INSERTING TOOLS 3 Dia. Lengths Thru 7/8 2 Dia. Lengths 1" and up
UNIFIED FINE	
3 (.099)-56	7552-03
4 (.112)-48	7552-04
6 (.138)-40	7552-06
8 (.164)-36	7552-2
10 (.190)-32	7552-3
1/4 (.2500)-28	7552-4
5/16 (.3125)-24	7552-5
3/8 (.3750)-24	7552-6
7/16 (.4375)-20	7552-7
1/2 (.5000)-20	7552-8
9/16 (.5625)-18	535-9
5/8 (.6250)-18	535-10
3/4 (.7500)-16	535-12
7/8 (.8750)-14	535-14
1 (1.0000)-14	535-16
1 (1.0000)-12	535-161
1-1/8 (1.1250)-12	535-18
1-1/4 (1.2500)-12	535-20
1-3/8 (1.3750)-12	535-22
1-1/2 (1.5000)-12	535-24

*Special tools required to install Phosphor Bronze and Inconel X Inserts in these sizes. To order add "-9" to the part number shown.

The various designs of *Heli-Coil* hand inserting tools are pictured. Generally, finer pitch inserts are proportionately larger in the free state than coarse pitch inserts and thus have to be "pre-wound" to a smaller diameter for installation. Large coarse pitch inserts (and 2-56 and 3-48 inserts) need only a threaded mandrel tool for installation.



TABLE X — HELI-COIL HAND INSERTING TOOL DIMENSIONS

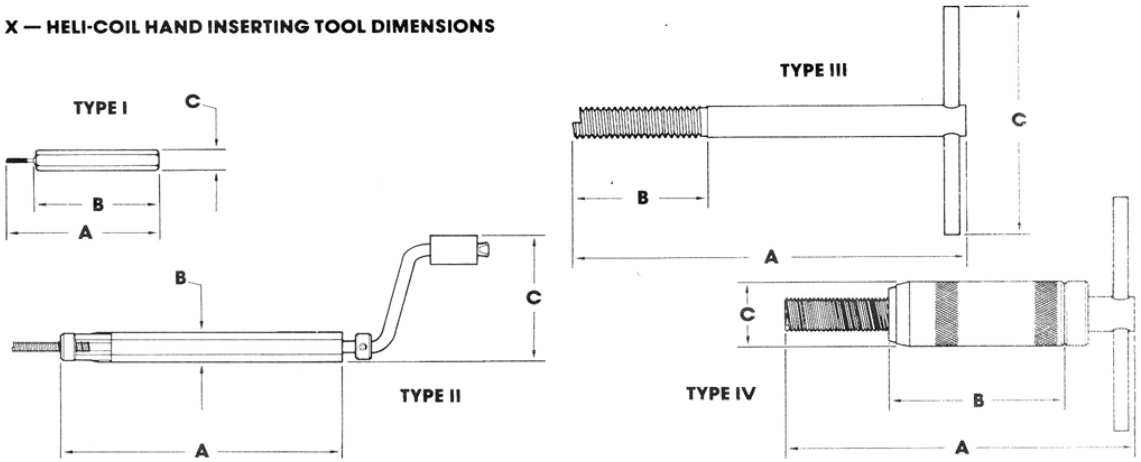

SIZE	A	B	C
TYPE I			
2-56	2-7/16	2	5/16
3-56	6	3	5/8
TYPE II — UNC & UNF			
#4	4-5/8	3/8	2-9/32
#5	4-5/8	3/8	2-9/32
#6	4-5/8	3/8	2-9/32
#8	4-5/8	3/8	2-9/32
#10	4-5/8	15/32	2-9/32
#12	4-5/8	33/64	2-17/32
1/4"	4-5/8	33/64	2-17/32
5/16"	4-5/8	5/8	3-23/32
3/8"	5	45/64	3-23/32

SIZE	A	B	C
TYPE II — UNC & UNF (cont'd)			
7/16"	5-1/4	25/32	3-23/32
1/2"	5-1/2	7/8	3-23/32
TYPE III — UNC			
9/16-12	4-7/8	1-13/16	4
5/8-11	4-7/8	2	4
3/4-10	4-7/8	2-3/8	4
7/8-9	4-7/8	2-3/4	4-1/2
1-8	4-7/8	2-1/8	4-1/2
1-1/8-7	6-3/4	2-1/2	6
1-1/4-7	6-3/4	2-3/4	6
1-3/8-6	6-3/4	3	6
1-1/2-6	6-3/4	3-1/4	6

SIZE	A	B	C
TYPE IV — UNF			
9/16-18	5-3/8	2-7/8	1-1/8
5/8-18	5-3/8	2-7/8	1-1/8
3/4-16	6	2-7/8	1-1/2
7/8-14	6-3/8	2-7/8	1-1/2
1-14	5-7/8	2-7/8	1-5/8
1-12	5-7/8	2-7/8	1-5/8
1-1/8-12	6-5/16	3-1/16	2
1-1/4-12	6-13/16	3-5/16	2
1-3/8-12	7-5/16	3-9/16	2-1/4
1-1/2-12	7-13/16	3-13/16	2-1/4

Heli-Coil - Handgewindebohrer
HELI-COIL HAND TAPS

STRAIGHT FLUTE - Widely used for general hand and machine tapping operations. Available in sizes thru 1½".

PLUG STYLE



(4 Thread Chamfer) - Used in thru holes and in blind holes that allow for ample chip clearance. Are easier starting and require less tapping torque than bottoming taps.

BOTTOMING STYLE



(2 Thread Chamfer) - Used in blind holes drilled to a minimum depth and that require threads close to the bottom of the hole.

SPIRAL POINTED & SPIRAL FLUTE - Used for efficient chip disposal in production tapping operations. Available in sizes thru 1/2".

SPIRAL POINTED - PLUG



(4 Thread Chamfer) - Incorporates an angular grind at the point end of the tap which shears chips and drives them forward of the tap. Used widely in long thru holes and blind holes with ample chip clearance. They are free cutting and provide increased tap strength. Not recommended for abrasive materials.

HIGH SPIRAL FLUTE - BOTTOMING



(2 Thread Chamfer) - Have spiral flute for efficiently pulling stringy chips out of deep or blind holes in soft materials.

ROUGHING TAPS - Are available for difficult tapping operations where it is desirable to reduce the load on the finishing tap. Available in sizes 7/16 - 1".

TABLE VI — HELI-COIL STI TAP PART NUMBERS

NOMINAL THREAD SIZE	STRAIGHT FLUTE				SPIRAL POINT		HIGH SPIRAL FLUTE		ROUGHING TAP
	PLUG		BOTTOMING		PLUG		BOTTOMING		
	3B	2B	3B	2B	3B	2B	3B	2B	
UNIFIED COARSE									
2 (.086)-56	02CPB	02CPA	02CBB	02CBA	02CSB	02CSA	5905-02	6905-02	
3 (.099)-48	03CPB	03CPA	03CBB	03CBA	03CSB	03CSA	5905-03	6905-03	
4 (.112)-40	04CPB	04CPA	04CBB	04CBA	04CSB	04CSA	5905-04	6905-04	
5 (.125)-40	05CPB	05CPA	05CBB	05CBA	05CSB	05CSA	5905-05	6905-05	
6 (.138)-32	06CPB	06CPA	06CBB	06CBA	06CSB	06CSA	5905-06	6905-06	
8 (.164)-32	2CPB	2CPA	2CBB	2CBA	2CSB	2CSA	5905-2	6905-2	
10 (.190)-24	3CPB	3CPA	3CBB	3CBA	3CSB	3CSA	5905-3	6905-3	
12 (.216)-24	1CPB	1CPA	1CBB	1CBA	1CSB	1CSA	5905-1	6905-1	
1/4 (.2500)-20	4CPB	4CPA	4CBB	4CBA	4CSB	4CSA	5905-4	6905-4	
5/16 (.3125)-18	5CPB	5CPA	5CBB	5CBA	5CSB	5CSA	5905-5	6905-5	
3/8 (.3750)-16	6CPB	6CPA	6CBB	6CBA	6CSB	6CSA	5905-6	6905-6	
7/16 (.4375)-14	7CPB	7CPA	7CBB	7CBA	7CSB	7CSA	5905-7	6905-7	7CRU
1/2 (.5000)-13	8CPB	8CPA	8CBB	8CBA	8CSB	8CSA	5905-8	6905-8	8CRU
9/16 (.5625)-12	187-9	38187-9	4187-9	43187-9					9CRU
5/8 (.6250)-11	8187-10	18187-10	10187-10	20187-10					10CRU
3/4 (.7500)-10	8187-12	18187-12	10187-12	20187-12					12CRU
7/8 (.8750)- 9	8187-14	18187-14	10187-14	20187-14					14CRU
1 (1.0000)- 8	8187-16	18187-16	10187-16	20187-16					16CRU
1-1/8 (1.1250)- 7	8187-18	18187-18	10187-18	20187-18					
1-1/4 (1.2500)- 7	8187-20	18187-20	10187-20	20187-20					
1-3/8 (1.3750)- 6	8187-22	18187-22	10187-22	20187-22					
1-1/2 (1.5000)- 6	8187-24	18187-24	10187-24	20187-24					
UNIFIED FINE									
3 (.099)-56	03FPB	03FPA	03FBB	03FBA	03FSB	03FSA	5906-03	6906-03	
4 (.112)-48	04FPB	04FPA	04FBB	04FBA	04FSB	04FSA	5906-04	6906-04	
6 (.138)-40	06FPB	06FPA	06FBB	06FBA	06FSB	06FSA	5906-06	6906-06	
8 (.164)-36	2FPB	2FPA	2FBB	2FBA	2FSB	2FSA	5906-2	6906-2	
10 (.190)-32	3FPB	3FPA	3FBB	3FBA	3FSB	3FSA	5906-3	6906-3	
1/4 (.2500)-28	4FPB	4FPA	4FBB	4FBA	4FSB	4FSA	5906-4	6906-4	
5/16 (.3125)-24	5FPB	5FPA	5FBB	5FBA	5FSB	5FSA	5906-5	6906-5	
3/8 (.3750)-24	6FPB	6FPA	6FBB	6FBA	6FSB	6FSA	5906-6	6906-6	
7/16 (.4375)-20	7FPB	7FPA	7FBB	7FBA	7FSB	7FSA	5906-7	6906-7	7FRU
1/2 (.5000)-20	8FPB	8FPA	8FBB	8FBA	8FSB	8FSA	5906-8	6906-8	8FRU
9/16 (.5625)-18	38193-9	18193-9	43193-9	20193-9					9FRU
5/8 (.6250)-18	8193-10	18193-10	10193-10	20193-10					10FRU
3/4 (.7500)-16	8193-12	18193-12	10193-12	20193-12					12FRU
7/8 (.8750)-14	8193-14	18193-14	10193-14	20193-14					14FRU
1 (1.0000)-14	8193-16	18193-16	10193-16	20193-16					16FRU
1 (1.0000)-12	8193-161	18183-161	10193-161	20193-161					161FRU
1-1/8 (1.1250)-12	8193-18	18193-18	10193-18	20193-18					
1-1/4 (1.2500)-12	8193-20	18193-20	10193-20	20193-20					
1-3/8 (1.3750)-12	8193-22	18193-22	10193-22	20193-22					
1-1/2 (1.5000)-12	8193-24	18193-24	10193-24	20193-24					

Heli-Coil - Handgewindebohrer
HELI-COIL HAND TAPS

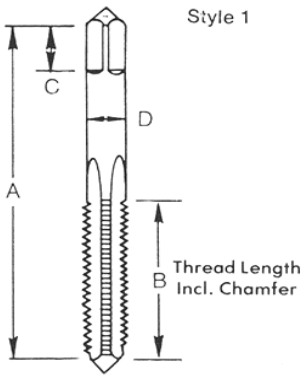

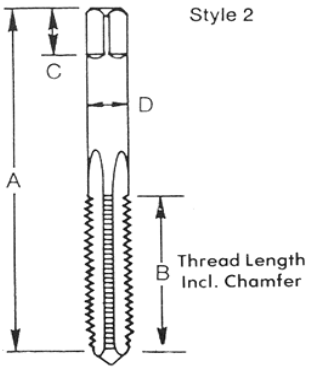

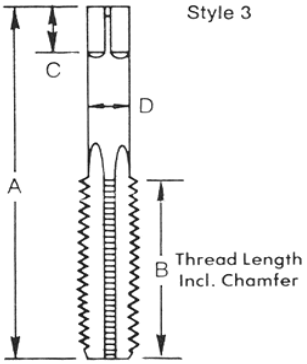

TABLE VII — HELI-COIL STI TAP DIMENSIONS

NOMINAL THREAD SIZE	TAP DIMENSIONS: LENGTH OVER ALL A	LENGTH OF THREAD B	LENGTH OF SQUARE C	MAX DIA. OF SHANK D	MAX SIZE OF SQUARE	NUMBER OF FLUTES: STRAIGHT FLUTE	SPIRAL POINT PLUG	SPIRAL FLUTE BOTT.	STYLE*	H LIMITS: 3B	2B
UNIFIED COARSE											
2 (.086)-56	1-7/8	9/16	3/16	.141	.110	3	2	2	1	H1	H2
3(.099)-48	1-15/16	5/8	3/16	.141	.110	3	2	2	1	H1	H2
4 (.112)-40	2	11/16	3/16	.141	.110	3	2	2	1	H1	H2
5 (.125)-40	2-1/8	3/4	1/4	.168	.131	3	2	3	1	H1	H2
6 (.138)-32	2-3/8	7/8	1/4	.194	.152	3	2	3	1	H2	H3
8 (.164)-32	2-3/8	15/16	9/32	.220	.165	3	2	3	1	H2	H3
10 (.190)-24	2-1/2	1	5/16	.255	.191	3	2	3	2	H2	H3
12 (.216)-24	2-23/32	1-1/8	3/8	.318	.238	3	2	3	2	H2	H3
1/4 (.2500)-20	2-23/32	1-1/8	3/8	.318	.238	3	2	3	2	H2	H3
5/16 (.3125)-18	2-15/16	1-1/4	7/16	.381	.286	4	3	3	2	H3	H4
3/8 (.3750)-16	3-3/8	1-21/32	7/16	.367	.275	4	3	3	3	H3	H4
7/16 (.4375)-14	3-19/32	1-21/32	1/2	.429	.322	4	3	4	3	H3	H4
1/2 (.5000)-13	3-13/16	1-13/16	9/16	.480	.360	4	3	4	3	H3	H4
9/16 (.5625)-12	4-1/32	1-13/16	5/8	.542	.406	4	—	—	3	H3	H4
5/8 (.6250)-11	4-1/4	2	11/16	.590	.442	4	—	—	3	H3	H4
3/4 (.7500)-10	4-11/16	2-7/32	3/4	.697	.523	4	—	—	3	H3	H5
7/8 (.8750)- 9	5/18	2-1/2	13/16	.800	.600	4	—	—	3	H3	H5
1 (1.0000)- 8	5-3/4	2-9/16	1	1.021	.766	4	—	—	3	H4	H6
1-1/8 (1.1250)- 7	6-1/16	3	1-1/16	1.108	.831	4	—	—	3	H4	H6
1-1/4 (1.2500)- 7	6-3/8	3	1-1/8	1.233	.925	4	—	—	3	H4	H6
1-3/8 (1.3750)- 6	6-11/16	3-3/16	1-1/8	1.305	.979	6	—	—	3	H6	H8
1-1/2 (1.5000)- 6	7	3-3/16	1-1/4	1.430	1.072	6	—	—	3	H6	H8
UNIFIED FINE											
3 (.099)-56	1-15/16	5/8	3/16	.141	.110	3	2	2	1	H1	H2
4 (.112)-48	2	11/16	3/16	.141	.110	3	2	2	1	H1	H2
6 (.138)-40	2-1/8	3/4	1/4	.168	.131	3	2	3	1	H1	H2
8 (.164)-36	2-3/8	15/16	9/32	.220	.165	3	2	3	1	H1	H2
10 (.190)-32	2-1/2	1	5/16	.255	.191	3	2	3	2	H2	H3
1/4 (.2500)-28	2-23/32	1-1/8	3/8	.318	.238	3	2	3	2	H2	H3
5/16 (.3125)-24	2-15/16	1-1/4	7/16	.381	.286	4	3	3	2	H2	H3
3/8 (.3750)-24	3-5/32	1-7/16	13/32	.323	.242	4	3	3	3	H2	H3
7/16 (.4375)-20	3-3/8	1-21/32	7/16	.367	.275	4	3	3	3	H3	H4
1/2 (.5000)-20	3-19/32	1-21/32	1/2	.429	.322	4	3	4	3	H3	H4
9/16 (.5625)-18	3-13/16	1-13/16	9/16	.480	.360	4	—	—	3	H3	H4
5/8 (.6250)-18	4-1/32	1-13/16	5/8	.542	.406	4	—	—	3	H3	H4
3/4 (.7500)-16	4-15/32	2	11/16	.652	.489	4	—	—	3	H3	H4
7/8 (.8750)-14	5-1/8	2-1/2	13/16	.800	.600	4	—	—	3	H3	H4
1 (1.0000)-14	5-7/16	2-9/16	7/8	.896	.672	4	—	—	3	H4	H6
1 (1.0000)-12	5-7/16	2-9/16	7/8	.896	.672	4	—	—	3	H4	H6
1-1/8 (1.1250)-12	5-3/4	2-9/16	1	1.021	.766	6	—	—	3	H4	H6
1-1/4 (1.2500)-12	6-1/16	3	1-1/16	1.108	.831	6	—	—	3	H4	H6
1-3/8 (1.3750)-12	6-3/8	3	1-1/8	1.233	.925	6	—	—	3	H4	H6
1-1/2 (1.5000)-12	6-11/16	3-3/16	1-1/8	1.305	.979	6	—	—	3	H4	H6

*NOTE: All bottoming taps have male center on thread end removed.

Heli-Coil - Gewindelehrdorne
HELI-COIL THREAD GAGES

HeliCoil THREAD GAGES

Accuracy of the finished thread, when the insert is installed, is dependent upon the accuracy of the tapped hole. If the finished tapped hole gages satisfactorily, the installed insert will be within the thread tolerance. ***It is not necessary to gage the installed insert.*** After the insert is installed, the GO thread plug gage may not enter freely; however, the insert will always seat itself when the bolt or screw is installed and tightened. (Reference MS33537)

Gage handles and all gage nibs are marked with the extreme product limits for the particular size and class of fit. (See Page 11, Table 5, Pitch Diameter Limits)

When gaging tapped holes which have been thoroughly cleaned or which have a protective finish applied, the gage should always be lubricated with light oil.

HI nib may enter provided a definite drag results on or before 3rd turn from entry - Ref. FED-STD-H28, Screw Thread Standards for Federal Services.

Heli-Coil STI Thread Plug Gages for checking the tapped hole are listed in the accompanying table.

Working gages provide a guaranteed minimum wear allowance on the pitch diameter of the GO members of two ten thousandths of an inch (.0002). These gages are recommended for production in sizes 1/2 inch and smaller.

Reference Gages have pitch diameters on or close to minimum (basic size). They are essentially laboratory or master gages and should be used in case of conflict between two working gages, which sometimes arises due to one of them having received more use and wear.

TABLE VIII — HELI-COIL THREAD PLUG GAGES

NOMINAL THREAD SIZE	WORKING GAGES SUGGESTED FOR LONGER WEAR LIFE		REFERENCE GAGES SUGGESTED AS MASTER GAGES	
	3B	2B	3B	2B
UNIFIED COARSE				
2 (.086)-56	3688-02	1442-02	1688-02	1440-02
3 (.099)-48	3688-03	1442-03	1688-03	1440-03
4 (.112)-40	3688-04	1442-04	1688-04	1440-04
5 (.125)-40	3688-05	1442-05	1688-05	1440-05
6 (.138)-32	3688-06	1442-06	1688-06	1440-06
8 (.164)-32	3688-2	1442-2	1688-2	1440-2
10 (.190)-24	3688-3	1442-3	1688-3	1440-3
12 (.216)-24	3688-1	1442-1	1688-1	1440-1
1/4 (.2500)-20	3688-4	1442-4	1688-4	1440-4
5/16 (.3125)-18	3688-5	1442-5	1688-5	1440-5
3/8 (.3750)-16	3688-6	1442-6	1688-6	1440-6
7/16 (.4375)-14	3688-7	1442-7	1688-7	1440-7
1/2 (.5000)-13	3688-8	1442-8	1688-8	1440-8
9/16 (.5625)-12			1688-9	1440-9
5/8 (.6250)-11			1688-10	1440-10
3/4 (.7500)-10			1688-12	1440-12
7/8 (.8750)- 9			1688-14	1440-14
1 (1.0000)- 8			1688-16	1440-16
1-1/8 (1.1250)- 7			1688-18	1440-18
1-1/4 (1.2500)- 7			1688-20	1440-20
1-3/8 (1.3750)- 6			1688-22	1440-22
1-1/2 (1.5000)- 6			1688-24	1440-24
UNIFIED FINE				
3 (.099)-56	3694-03	1443-03	1694-03	1441-03
4 (.112)-48	3694-04	1443-04	1694-04	1441-04
6 (.138)-40	3694-06	1443-06	1694-06	1441-06
8 (.164)-36	3694-2	1443-2	1694-2	1441-2
10 (.190)-32	3694-3	1443-3	1694-3	1441-3
1/4 (.2500)-28	3694-4	1443-4	1694-4	1441-4
5/16 (.3125)-24	3694-5	1443-5	1694-5	1441-5
3/8 (.3750)-24	3694-6	1443-6	1694-6	1441-6
7/16 (.4375)-20	3694-7	1443-7	1694-7	1441-7
1/2 (.5000)-20	3694-8	1443-8	1694-8	1441-8
9/16 (.5625)-18			1694-9	1441-9
5/8 (.6250)-18			1694-10	1441-10
3/4 (.7500)-16			1694-12	1441-12
7/8 (.8750)-14			1694-14	1441-14
1 (1.0000)-14			1694-16	1441-16
1 (1.0000)-12			1694-161	1441-161
1-1/8 (1.1250)-12			1694-18	1441-18
1-1/4 (1.2500)-12			1694-20	1441-20
1-3/8 (1.3750)-12			1694-22	1441-22
1-1/2 (1.5000)-12			1694-24	1441-24



HELI-COIL sTi GAGE WITH GO AND HI MEMBERS

SLIMSERT - Handeinbauwerkzeuge
SLIMSERT - HAND INSERTING TOOLS

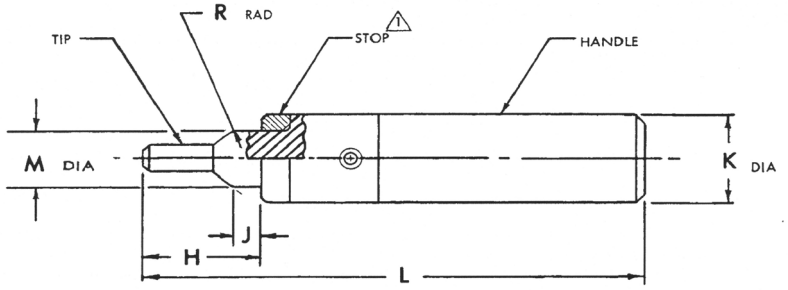

Swage Tool

Tool Number	STOP Number	H +/- .015	J +.000 -.010	K DIA	L +/- .060	M DIA min.	R RAD
SR 08 S-A	SR 08 S-2	.126	.038	.31	3.808	.103	.015
SR 11 S-A	SR 11 S-2	.185	.051	.43	3.808	.103	.015
SR 14 S-A	SR 14 S-2	.205	.055	.43	3.985	.161	.015
SR 16 S-A	SR 16 S-2	.205	.061	.43	3.985	.192	.015
SR 19 S-A	SR 19 S-A-2	.273	.077	.43	4.055	.211	.015
SR 25 S-A	SR 25 S-2	.348	.075	.50	4.085	.280	.030
SR 31 S-A	SR 31 S-A-2	.423	.072	.56	4.270	.345	.040
SR 37 S-A	SR 37 S-A-2	.513	.096	.62	4.488	.408	.045
SR 43 S-A	SR 43 S-2	.548	.100	.62	4.548	.470	.045
SR 50 S-A	SR 50 S-A-2	.548	.100	.75	4.665	.536	.045
SR 56 S-A	SR 56 S-2	.501	.119	1.00	4.905	.605	.040
SR 62 S-A	SR 62 S-2	.501	.119	1.00	4.905	.669	.040
SR 75 S-A	SR 75 S-2	.501	.130	1.00	4.905	.798	.075
SR 87 S-A	SR 87 S-2	.501	.130	1.25	5.148	.929	.075
SR 93 S-A	SR 93 S-2	.501	.147	1.38	5.295	.985	.075

Notes: Replacment Nylon Stops are available; see Table for part numbers.
When replacing Stop, press on to seat with countersink against shoulder.

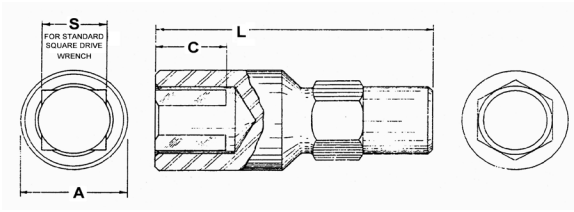

Wrench - 6 Point

Wrench Part-Number	A DIA.	C	L (REF)	S
SR 11 W-A	.44	.28	.84	1/4"
SR 14 W-A	.44	.28	.87	1/4"
SR 16 W-A	.44	.28	.90	1/4"
SR 19 W-A	.44	.28	.94	1/4"
SR 25 W-A	.44	.28	1.03	1/4"
SR 31 W-A	.44	.28	1.12	1/4"
SR 37 W-A	.62	.40	1.39	3/8"
SR 43 W-A	.62	.40	1.48	3/8"
SR 50 W-A	.62	.40	1.58	3/8"
SR 56 W-A	.75	.40	1.66	3/8"
SR 62 W-A	.88	.40	1.75	3/8"
SR 75 W-A	1.0	.40	1.94	3/8"

Bemerkung:
Einbauwerkzeuge **"KT8000H..."** sind nicht mehr lieferbar und werden ersetzt durch die Werkzeuge gem. nebenstehender Tabelle.
Sie benötigen jetzt 1 Eindrehwerkzeuge und 1 Aufweitwerkzeug.

Notice:
Installation Tools **"KT8000H..."** are obsolete and replaced by the tools listed beside.
You need now 1 Wrench Tool and 1 Swage Tool.

OLD Tool No.	New Swage Tool No.		New Wrench Tool No.
KT8000H-02	SR 08 S-A	+	-
KT8000H-04	SR 11 S-A	+	SR 11 W-A
KT8000H-06	SR 14 S-A	+	SR 14 W-A
KT8000H-08	SR 16 S-A	+	SR 16 W-A
KT8000H-3	SR 19 S-A	+	SR 19 W-A
KT8000H-4	SR 25 S-A	+	SR 25 W-A
KT8000H-5	SR 31 S-A	+	SR 31 W-A
KT8000H-6	SR 37 S-A	+	SR 37 W-A
KT8000H-7	SR 43 S-A	+	SR 43 W-A
KT8000H-8	SR 50 S-A	+	SR 50 W-A
KT8000H-9	SR 56 S-A	+	SR 56 W-A
KT8000H-10	SR 62 S-A	+	SR 62 W-A
KT8000H-12	SR 75 S-A	+	SR 75 W-A
KT8000H-14	SR 87 S-A	+	-
KT8000H-15	SR 93 S-A	+	-

Cyclo Poliermaschine
CYCLO DUAL HEAD POLISHER



Model 6CE-Pro

Model 6CE-Pro

- Power Supply: 220-240 V a.c., 220 Watts, meets European CE Standards
- Motor: Alternating current, semi-enclosed 24-bar commutator
- Variable Speed Range: **650 - 3000 orbits/minute**
- Output: 1/3 H.P. (.25 Kw)
- Weight: 6.5 lb. (2.9 kg)
- Head Rotation/Diameter: Clockwise/4" • Electric Cord: 2.5 m
- Housing: Heavy-duty cast aluminium

Foam Bonnet Pads



White Finishing Pads
Recommended Applications:
• Extreme Shine • Final Wax Buff
• Wax Applications • Sealant • Metal Sealant

72-110

This superfine pad is used in final buffing, after initial polishing with other pads. Excellent for applying sealants and buffing out wax.



Blue Polishing Pads
Recommended Applications:
• Paint/Metal Sealant • Paint Polish • Paint Cleaner • Final Wax Buff • Wax Application

72-115

The perfect pad for light polishing on any surface. Use with wax and polish for a fine gloss finish or to remove swirl marks.



Green Polishing Pads
Recommended Applications:
• Sealant • Paint Polish
• Paint Cleaner • Metal Sealant

72-120

A more aggressive pad than the white or blue pads. The pore density makes it perfect for polishing and removing light oxidation for a stunning shine.



Yellow Cutting Pads
Recommended Applications:
• Paint Polish/Cleaner • Paint Compound
• Paint Deox • Paint Scratch Remover

72-135

A firm, versatile pad that can be used on everything from compounding and scratch removal to applying paint cleaners and polishes.



Orange Compounding and Polishing Pads
Recommended Applications:
• Paint Polish/Cleaner • Paint Deox
• Paint Compound • Metal/Chrome Polish

72-145

An exceptional, all-in-one cleaning and polishing pad. This high density pad has the power to remove lights scratches and polish the surface.

Pad Covers



Cotton Terry Pad Cover
Recommended Applications:
• Final Wax Buff
• Upholstery

73-550

Brushes



White Standard Carpet Brush
Recommended Applications:
• Auto & RV Carpets & Interior
• Tile & Grout • Durable Carpets

76-840x2*

Designed for more vigorous cleaning. It is recommended for floor pads and more durable carpets. This Brush is stiffer and less giving, but more durable than the Soft Brush.



Black Stiff Scrub Brush
Recommended Applications:
• Tile & Grout
• Truck Bed Liners

76-870x2*

The most aggressive brush. This brush provides exceptional scrubbing power on tough surfaces. Used for cleaning tile, stone floors, and pick-up truck bed liners.



Gray Ultra Soft Upholstery Brush
Recommended Applications:
• Upholstery • Fine Carpets
• Fine Interiors

76-810x2*

The ideal brush for delicate surfaces. Each bristle is "flagged", a technique that splits ends into multiple fine tips. Ideal for use on headliners, leather, and other fragile upholstery, and natural fiber fine carpets.



Aqua Soft Carpet Brush
Recommended Applications:
• Fine Carpets • Durable Carpets
• Auto & RV Carpets & Upholstery

76-830x2*

This brush features medium crimped bristles for a gentle yet thorough cleaning. Each brush kneads and vibrates loose any soil or debris and is perfect for most carpets.

*** two VES Weight Inserts P/N 20-076 are required to attach the Brushes**

Proguard Orbital Backing Plate



The Backing Plate is required to attach all Foam Pads to the 6CE-Pro.

79-112x2

ORBITAL VERSUS ROTARY ACTION



Orbital Action: Buffs, polishes and sands with a motion just like that of the human hand! Hundreds of times faster than hand motion, no tendency to "get away" from the operator. Smooth, hand-like action safeguards against surface damage.
Recommended for Basecoat/Clearcoat finishes.

Rotary Polishing Action: High speed outer rim of "single action" rotary polishers can gouge, burn and mar surfaces causing costly damage in a split second. Unsightly swirl marks are always distributing and downright ugly.
Not recommended for use on Basecoat/Clearcoat finishes unless foam pads are used.



Flugzeugbauer Kit
SHEET METAL TOOL KIT

EH-ATK



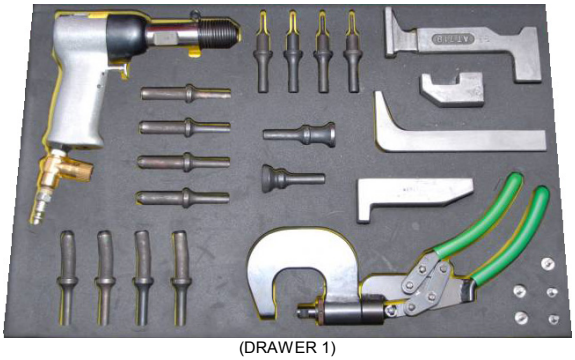

(DRAWER 1)

DRAWER 1:

Item	Part-Number	Description	Qty/Set
01.	**3X-SP**	PNEUM. RIVET HAMMER	1
02.	**100A3-3/32**	DÖPPER / RIVET SET	1
03.	**100A3-1/8**	DÖPPER / RIVET SET	1
04.	**100A3-5/32**	DÖPPER / RIVET SET	1
05.	**100A3-3/16**	DÖPPER / RIVET SET	1
06.	**101A3-3/32**	DÖPPER / RIVET SET	1
07.	**101A3-1/8**	DÖPPER / RIVET SET	1
08.	**101A3-5/32**	DÖPPER / RIVET SET	1
09.	**101A3-3/16**	DÖPPER / RIVET SET	1
10.	**107A-1 (ST-90)**	FLACHDÖPPER / RIVET SET, FLUSH	1
11.	**110CA 3/4 (TP91)**	FLACHDÖPPER / RIVET SET, FLUSH	1
12.	**612**	GEGENHALTEEISEN / BUCKING BAR	1
13.	**634**	GEGENHALTEEISEN / BUCKING BAR	1
14.	**639**	GEGENHALTEEISEN / BUCKING BAR	1
15.	**719**	GEGENHALTEEISEN / BUCKING BAR	1
16.	**141A3-3/32**	NIETAUSTREIBER / KNOCK-OUT PUNCH	1
17.	**141A3-1/8**	NIETAUSTREIBER / KNOCK-OUT PUNCH	1
18.	**141A3-5/32**	NIETAUSTREIBER / KNOCK-OUT PUNCH	1
19.	**141A3-3/16**	NIETAUSTREIBER / KNOCK-OUT PUNCH	1
20.	**410510**	EINHAND-NIETZANGE OHNE BÜGEL NZ62 HAND RIVET SQUEEZER	1
21.	**417007**	C-BÜGEL / C-YOKE 40 X 45 MM X 4,8 MM	1
22.	**109AN-1/8**	NIETEINSATZ/RIVET SET	1
23.	**109AP-1/4**	NIETEINSATZ/RIVET SET	1
24.	**109AR-3/8**	NIETEINSATZ/RIVET SET	1
25.	**108AP-3/32**	NIETEINSATZ/RIVET SET	1
26.	**108AP-1/8**	NIETEINSATZ/RIVET SET	1

DRAWER 2:

Item	Part-Number	Description	Qty/Set
27.	**2071Z-24**	AUTOM. HEFTNADEL TEMPORARY FASTERNER, CLECO STYLE	50
28.	**2071Z-32**	AUTOM. HEFTNADEL TEMPORARY FASTERNER, CLECO STYLE	50
29.	**2071Z-40**	AUTOM. HEFTNADEL TEMPORARY FASTERNER, CLECO STYLE	50
30.	**2071Z-48**	AUTOM. HEFTNADEL TEMPORARY FASTERNER, CLECO STYLE	50
31.	**TP-74**	HEFTNADELZANGE PLIER FOR TEMPORARY FASTENER	2
32.	**2072KU-24**	SCHRAUBHEFTNADEL TEMPORARY FASTENER	50
33.	**2072KU-32**	SCHRAUBHEFTNADEL TEMPORARY FASTENER	50
34.	**2072KU-40**	SCHRAUBHEFTNADEL TEMPORARY FASTENER	50
35.	**2072KU-48**	SCHRAUBHEFTNADEL TEMPORARY FASTENER	50
36.	**2072KU-24 X 15**	SCHRAUBHEFTNADEL TEMPORARY FASTENER	10
37.	**2072KU-32 X 15**	SCHRAUBHEFTNADEL TEMPORARY FASTENER	10
38.	**2072KU-40 X 15**	SCHRAUBHEFTNADEL TEMPORARY FASTENER	10
39.	**2072KU-48 X 15**	SCHRAUBHEFTNADEL TEMPORARY FASTENER	10
40.	**KSG-1/2 X 1/2**	BLECHKLEMME / CLAMP	10
41.	**KSG-1/2 X 1**	BLECHKLEMME / CLAMP	10
42.	**P 400**	SPANNZANGE / Toggle Plier KNU-VISE	5
43.	**P800**	SPANNZANGE / Toggle Plier KNU-VISE	2

DRAWER 3:

Item	Part-Number	Description	Qty/Set
44.	**1410**	PNEUM. BOHRMASCHINE / DRILL 0.33 HP	1
45.	**332B**	OFFSET ANGLE DRILL 1/4-28	1
46.	**11-303**	THREADED SHANK ADAPTER DRILL STUB SERIES, 3/32	1
47.	**11-305**	THREADED SHANK ADAPTER DRILL STUB SERIES, 1/8	1
48.	**11-307**	THREADED SHANK ADAPTER DRILL STUB SERIES, 5/32	1
49.	**11-309**	THREADED SHANK ADAPTER DRILL STUB SERIES, 3/16	1
50.	**53606 (04-102)**	AIRCRAFT EXTENSION DRILL 6 x 3/32	2
51.	**53608 (04-104)**	AIRCRAFT EXTENSION DRILL 6 x 1/8	2
52.	**04-106 (53610)**	AIRCRAFT EXTENSION DRILL 6 x 5/32	2
53.	**04-108 (53612)**	AIRCRAFT EXTENSION DRILL 6 x 3/16	2
54.	**52606 (36961) (06-302)**	AIRCRAFT EXTENSION DRILL 12 x 3/32	2
55.	**52608 (36962) 06-304**	AIRCRAFT EXTENSION DRILL 12 x 1/8	2
56.	**52610 (06-306)**	AIRCRAFT EXTENSION DRILL 12 x 5/32	2
57.	**52612 (36966) (06-308)**	AIRCRAFT EXTENSION DRILL 12 x 3/16	2
58.	**ZT 330 S**	MICRO STOP COUNTERSINK UNIT 1/4-28	1
59.	**445E4-3/32**	SENKER / COUNTERSINK CUTTER 100°	1
60.	**445E4-1/8**	SENKER / COUNTERSINK CUTTER 100°	1
61.	**445E4-5/32**	SENKER / COUNTERSINK CUTTER 100°	1
62.	**445E4-3/16**	SENKER / COUNTERSINK CUTTER 100°	1
63.	**402-3/32 (2,4 MM)**	ANSCHLAGSENKER 100° MINIATURE STOP COUNTERSINK CUTTER	1
64.	**402-1/8 (3,2 MM)**	ANSCHLAGSENKER 100° MINIATURE STOP COUNTERSINK CUTTER	1
65.	**402-5/32 (4,0 MM)**	ANSCHLAGSENKER 100° MINIATURE STOP COUNTERSINK CUTTER	1
66.	**402-3/16 (4,8 MM)**	ANSCHLAGSENKER 100° MINIATURE STOP COUNTERSINK CUTTER	1
67.	**CTP093-3/32**	BURRAWAY TOOL TYPE A	1
68.	**CTP125-1/8**	BURRAWAY TOOL TYPE A	1
69.	**CTP156-5/32**	BURRAWAY TOOL TYPE A	1
70.	**CTP187-3/16**	BURRAWAY TOOL TYPE A	1
71.	**570-10**	BOHRSTOP 4,91 MM / DRILL STOP	1
72.	**570-21**	BOHRSTOP 4,04 MM / DRILL STOP	1
73.	**570-30**	BOHRSTOP 3,26 MM / DRILL STOP	1
74.	**570-40**	BOHRSTOP 2,50 MM / DRILL STOP	1
75.	**350-.1875-100-.0938**	CTS. CUTTER , STRAIGHT SHANK 3/16 X 100 X 3/32 COBALT	1
76.	**350-.2500-100-.1250**	CTS. CUTTER , STRAIGHT SHANK 1/4 X 100 X 1/8 COBALT	1
77.	**350-.3125-100-.1562**	CTS. CUTTER , STRAIGHT SHANK 5/16 X 100 X 5/32 COBALT	1
78.	**350-.3750-100-.1875 (5831)**	CTS. CUTTER , STRAIGHT SHANK 3/8 X 100 X 3/16 COBALT	1
79.	**514**	EDGE BREAKER	1
80.	**512**	SPÄNEHAKEN/CHIP CHASER	1

Flugzeugbauer Kit
SHEET METAL TOOL KIT

DRAWER 4:

Item	Part-Number	Description	Qty/Set
81.	**TP-6721**	MASSEBÜRSTEN 3/32 / HOLE BRUSH	1
82.	**TP-6741**	MASSEBÜRSTEN 1/8 / HOLE BRUSH	1
83.	**TP-6761**	MASSEBÜRSTEN 5/32 / HOLE BRUSH	1
84.	**TP-6781**	MASSEBÜRSTEN 3/16 / HOLE BRUSH	1
85.	**532-61**	BOHRSCHABLONE DRILL DUPLICATOR #40	1
86.	**532-62**	BOHRSCHABLONE DRILL DUPLICATOR #30	1
87.	**532-63**	BOHRSCHABLONE DRILL DUPLICATOR #21	1
88.	**532-65**	BOHRSCHABLONE DRILL DUPLICATOR #10	1
89.	**4244-1**	HSS TAPER ROUTER	1
90.	**4244-2**	HSS TAPER ROUTER	1
91.	**4244-3**	HSS TAPER ROUTER	1
92.	**4244-4**	HSS TAPER ROUTER	1
93.	**M2A016 (103-000-853)**	MINI MAGLITE 2-Cell AA Flashlight	1
94.	**70-921**	POCKET MIRROR , ROUND DIA 7/8	1
95.	**70-925**	CIRCULAR POCKET MIRROR , ROUND	1
96.	**S-2**	CIRCULAR POCKET MIRROR	1
97.	**70-933-SP**	RETRIEVING TOOL, MAGNETIC	1
98.	**CF-616**	PREC. FLEX. RULE SATIN CHROME	1
99.	**508K**	ELECTRICAL CONNECTOR PLIER	1
100.	**ZHBL-1200 (10936)**	BALL END KEY SET (12 PCS) INCH	1

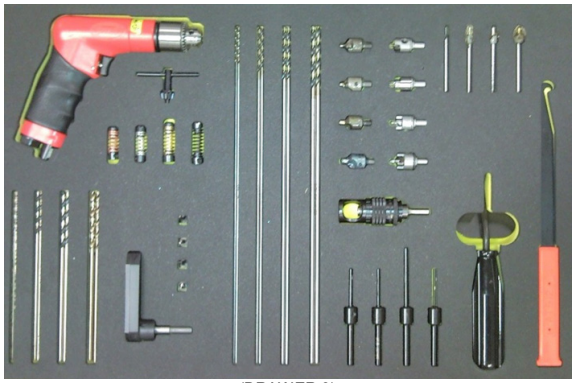

(DRAWER 3)

DRAWER 5:

Item	Part-Number	Description	Qty/Set
101.	**ATBR-2125**	HI-LOK HAND TOOL 7/32 - 1/4	1
102.	**ATBR-2528**	HI-LOK HAND TOOL 1/4 - 9/32	1
103.	**ATBR-2531**	HI-LOK HAND TOOL 1/4 - 5/16	1
104.	**ATBR-3134**	HI-LOK HAND TOOL 5/16 - 11/32	1
105.	**ATBR-3137**	HI-LOK HAND TOOL 5/16 - 3/8	1
106.	**ATBR-4350**	HI-LOK HAND TOOL 7/16 - 1/2	1
107.	**ZRDA80-22**	HI LOK ROLLER RATCHET 7/32	1
108.	**ZRDA80-25**	HI LOK ROLLER RATCHET 1/4	1
109.	**ZRDA80-28**	HI LOK ROLLER RATCHET 9/32	1
110.	**ZRDA80-31**	HI LOK ROLLER RATCHET 5/16	1
111.	**ZRDA80-34**	HI LOK ROLLER RATCHET 11/32	1
112.	**ZRDA 80-37**	HI LOK ROLLER RATCHET 3/8	1
113.	**607-1/16**	WRENCH TIP ASSY	1
114.	**607-5/64**	WRENCH TIP ASSY	1
115.	**607-3/32**	WRENCH TIP ASSY	1
116.	**57304 (609-1/8)**	WRENCH TIP ASSY - T-HANDLE	1
117.	**57308 (609-5/32)**	WRENCH TIP ASSY - T-HANDLE	1
118.	**EH-3579**	HI LOK COLLAR REMOVAL PLIER	1
119.	**G-27**	CHERRY MAX HANDNIETGERÄT / HAND TOOL	1
120.	**2-612 (CATGS-1)**	GRIP SCALE DAN5069-1	1
121.	**269C3**	CHERRY GRIP SCALE	1
122.	**2-1522**	HI-LOK LEHREN/GAGES	1

DRAWER 6:

Item	Part-Number	Description	Qty/Set
123.	**560C**	STAUBSAUGER, KUNSTSTOFF VACUUM, PLASTIC	1
124.	**560CF-18**	VERLÄNGERUNG, FLEXIBEL EXTENSION FOR VACUUM	1
125.	**590 S**	BACK-SPOTFACER KIT	1
126.	**590 TA**	BACK-COUNTERSINK KIT	1
127.	**590-DBK**	DRILL BUSHING ASSEMBLY KIT	1
128.	**501-R**	RIVET CUTTER	1
129.	**65751220**	DRAHTWIRBELZANGE SAFETY WIRE PLIER	1
130.	**14 WA** **DIA 0.020 (0,51 MM)**	SAFETY WIRE STAINLESS 1/4 LB	1
131.	**15 WA** **DIA 0.032 (0,81 MM)**	SAFETY WIRE STAINLESS 1/4 LB	1
132.	**16 WA** **DIA 0.041 (1,04 MM)**	SAFETY WIRE STAINLESS 1/4 LB	1
133.	**75230001**	HEBEL-BLECHSCHERE, LINKS AVIATION SNIP, LEFT	1
134.	**75230002**	HEBEL-BLECHSCHERE, RECHTS AVIATION SNIP, RIGHT	1
135.	**53-1900RSK**	PRO RIVET SHAVER KIT	1



(DRAWER 4)



(DRAWER 5)

Composite Material Repair Tool Kit with dust collection system

K-3000-MIL-1 / K-3000-HB

The K-3000-MIL-1 is a perfect addition to your hangar maintenance program.

This new kit is equipped with all the necessary pneumatic, hand tools and accessories to complete repairs on all types of composite materials including Kevlar. The kit includes installation and removal tools for blind rivets (Cherry Maxi-bolt® & Huck type stainless steel and Titanium Blind Bolts), Composi-Lok II® fasteners and Hi-Shear® (Hi-Lok/Hi-Lite) fasteners up to 1/4" diameter.
We supply the most current aerospace tooling in a state of the art mobile system, including router cut foam for rapid inventory and tool control.

K-3000-MIL-1 Specifications

Total Kit Weight (complete): 200 lbs.

Box 1 Dimensions:
43"wide x 27.5" deep x 20" high w/ casters attached

Box 2 Dimensions:
27.3"wide x 20.5" deep x 13.7" high w/ casters attached

Box Features:
Extra handles including, Caster sets, Locking cable/hasps, Purge or fill valves, Airtight case systems.

Box 1 Foam Trays:
5 Layers, 8 Total Trays (Yellow & Black) sprayed with a protective coating for additional strength and resistance to fluids.







Optional available also in a storage box to have a mobile Composite shop! (K-3000-HB)



Weitere Informationen auf Anfrage / MORE INFORMATION ON REQUEST

Absaugsysteme 157 -159
Adapter, Sechskant auf Vierkant 143
Akku-Blindnietgerät 236
Akku-Blindnietgeräte-Satz 237
Annietmutter Blindnietgerät, pneumatisch 250
Annietmutter-Bohrmaschine, pneum. 90
Annietmutter-Bohrschablonen 116 - 117
Annietmutter-Niete, Handnietzange 235
Anschlaghalter, für Senker 46 - 52
Applikationswerkzeuge/Zubehör, Kleb-/Dichtstoffe 166 - 172
ASP - Steckschlüssel 234
Ausbauwerkzeug, Schrauben, für Niethammer 147
Ausbauwerkzeuge für Steckerstifte 316 - 317
Ausbauwerkzeuge, Collar-Meißel 24
Ausdreher, Ventil- 148

Bithalter, für Maschinen 140 - 143
Bithalter, Hand- 144
Bit-Knarren 146
Bits, French Recess 125
Bits, Mortorq 125
Bits, Phillips 122 - 123
Bits, Schlitz 124 - 125
Bits, Sechskant 126 - 127
Bits, Tamper Resistants Spanner 127
Bits, Torq-Set 130 - 135
Bits, Torx 128 - 129
Bits, Tri-Wing 136 - 139
Bits, Vierkant 127
Blechklemmen, handbetätigt 8
Blechklemmen, zangenbetätigt 8
Blechscheren, pneum. 161
Blindniet & Lockbolt Montagewerkzeuge 232 - 260
Blindnietgerät, Akku- 236
Blindnietgeräte-Sätze, Akku- 237
Blindnietgeräte-Sätze, Akku, Hand, pneumatisch 238 - 239
Blindnietmuttern-Einbauwerkzeuge 235
Boelube-Schmiermittel 91
Bohr-/Loch Positionierer 313
Bohranschläge 114
Bohrbuchsen 114
Bohrbuchsen-Satz 114
Bohrer, Doppelfasen- 101
Bohrer, für Annietmutter-Bohrmaschine 90
Bohrer, Hartmetall, Composite 80 - 82
Bohrer, Hartmetall, für Kohlefaser u. Kevlar 60
Bohrer, Hartmetall, Standard Längen 80
Bohrer, Kobalt (M42), extra lang, 150 mm 108 - 109
Bohrer, Kobalt (M42), extra lang, 300 mm 110 - 111
Bohrer, Kobalt (M42), Standard-Längen 104 - 107
Bohrer, Kobalt, zum Nietausbohren 100
Bohrer, mit Gewinde 112 - 113
Bohrer, PCD 81 - 82
Bohrer, Speer-, Hartmetall, Composite 79
Bohrmaschinen, pneum., Drehzahlregler 91
Bohrmaschinen, pneum., gerade Form 94
Bohrmaschinen, pneum., Pistolengriff 91 - 93
Bohrmaschinen, pneum., Winkelform 95 - 96
Bohr-Reibahlen, Hartmetall, Composite 79
Bohrschablonen, für Annietmuttern 116 - 117
Bohrschablonen, Heftnadeln 1
Bohrvorschubeinheit 88 - 89
BRILES, Senker 53
Bürsten, Massebürsten 155

C-Bügel, schwenkbar, für Nietpressen 30
Cherry, hydraulisches Handnietgerät G800 240
Cherry, hydraulisches Handnietgerät, Satz, G800CMR 241
Cherry, Lehren 234
CherryLock "A", Nietgeräte, pneumatisch 247 - 248
CherryLock "A", Handnietzange 235
CherryLock, Nietgeräte, pneumatisch 249
CherryMax, Handnietzange 235
CherryMax, Nietgeräte, pneumatisch 243 - 246
Cleco Schrauber, Druckluft, Sechskantmutter 4
Cleco Schrauber, Druckluft, zylindrische Mutter 6 - 7
Cleco Schrauber, Batteriebetrieben, zylindrische Mutter 6
Cleco, Zange 3
Clecos, Heftnadeln 1 - 7
Collar Ausbauwerkzeuge, Hi-Lok 189 - 191
COMPOSI-LOK, Einbauwerkzeuge 272 - 279
COMPOSI-LOK, Einbauwerkzeuge, Satz 303 - 309
COMPOSI-LOK II, Einbauwerkzeuge 290 - 299
COMPOSI-LOK III, Einbauwerkzeuge 300 - 302
Composite Bohrer, Hartmetall, für Kevlar 100
Composite Bohr-Reibahlen, Hartmetall 79
Composite Hartmetall-Bohrer 80
Composite Lochsägen, Diamantbestückt 76
Composite Reparatur Kit 334
Composite Sägeblätter, Diamantbestückt 75
Composite Schaftfräser, Diamantbestückt 77
Composite Schneidwerkzeuge 75 - 82
Composite Senker 60 - 61
Composite Senker mit Zapfen, Diamantbestückt 78
Composite Speerbohrer, Hartmetall 79
Composite Stichsägeblätter, Diamantbestückt 77
CYCLO Poliermaschine, elektrisch, Doppel-Kopf 331
CYCLO Polierzubehör, Polierscheiben, Bürsten 331

DAN5109, Senker, mit Gewinde 62
DESTACO, Klemmen 15
Diamantbestückte Lochsägen, Composite 76
Diamantbestückte Sägeblätter, Composite 75
Diamantbestückte Schaftfräser, Composite 77
Diamantbestückte Senker mit Zapfen, Composite 78
Diamantbestückte Stichsägeblätter, Composite 77
Dichtstoff-Entferner, Winkelschleifer, pneumatisch 168
Dichtstoff-Fräser, mit Gewindeadapter 168
Dimpeleinsätze 36
Dimpeleinsätze, Satz 37
Dimpelmaschine, stationär 17
Doppel-Kopf Pliermaschine, CYCLO, elektrisch 331
Döpper 20 - 23
Döpper mit Kalotte 20 - 23
Döpper, HI-SHEAR 23
Dosierpistole, handbetätigt, SEMCO 165

Dosierpistole, pneumatisch, SEMCO 165
Dosierpistolen-Zubehör, SEMCO 165
Duplikator, mit Bohrbuchse für Lochübertragung 115
Duplikator, mit Körner für Lochübertragung 115
Double Action-Nietgerät Mod. 200, pneumatisch 260
Draht-Wirbelzangen & Sätze 150 - 151
Druckluft-Staubsauger 156 - 157

Ein- u. Ausbauwerkzeuge, Hi-Lok, Hand- 176 - 191
Einbauwerkzeuge für Steckerstifte 316 - 317
Einbauwerkzeuge, COMPOSI-LOK 272 - 279
Einbauwerkzeuge, COMPOSI-LOK II 290 - 299
Einbauwerkzeuge, COMPOSI-LOK III 300 - 302
Einbauwerkzeuge, Hand-, Heli-Coil 326
Einbauwerkzeuge, JO-BOLT / VISU-LOK 262 - 271
Einbauwerkzeuge, VISU-LOK II 280 - 289
Einstelllehre (G784/GBP784B) 234
Endbearbeitungsmaschine, Rohr- 320
Entgratmesser, Hartmetall, für Rohrbearbeitung 320
Entgratwerkzeuge 118 - 119
Entgratwerkzeuge, Hand 152
Entlüfter, für hydropneum. Nietgeräte 234

Farbschneider, mit Gewinde 155
Federheftnadeln, Clecos 3
Feilen-Satz, Nadel- 160
Flachdöpper 20 - 23
Flachmeißel, für Niethammer 24
Flugzeugbauer Werkzeugsatz 332 - 333
Fräsbohrer, konisch 100
Fräser, Dichtstoff, mit Gewindeadapter 168
Fräser, für Kunststoffe 100
Fräser, für Nietfräse 39 - 40
Fräser, für pneum. Walzenfräser 41 - 45
Fräser, Waben- 73 - 74
Frässtifte, Hartmetall 83 - 85
Führungsreibahlen, HSS 102 - 103
Führungsstangen, Rückzugsenker/Planfräser 67
Führungszapfen, für Lochsägen 68 - 69
Führungszapfen, für Planfräser 71
Führungszapfen, für Plansenker 72
Führungszapfen, für Senker 54 - 62

Gegenhalteisen, Stahl 26 - 27
Gegenhalteisen-Satz, rückschlaggedämpft 28
Gegenhalter, Wolfram 25
Gewindeadapter-Bohrer 112 - 113
Gewindebohrer, Hand-, Heli-Coil 327 - 328
Gewindelehrdorne, Heli-Coil 329
Glättwerkzeuge/Zubehör, Kleb-/Dichtstoffe 166 - 172

Halosensor 313
Halter, Composite Lochsägen 76
Halter, für Schraubendrehereinsätze 140 - 143
Halter, mit Innengewinde 53
Handeinbauwerkzeuge, Heli-Coil 326
Handeinbauwerkzeuge, Slimsert 330
Hand-Entgratwerkzeuge 152
Hand-Gewindebohrer, Heli-Coil 327 - 328
Hand-Halter, für Schraubendrehereinsätze 144
Hand-Blechklemmen 8
Hand-Kelchwerkzeuge 318 - 319
Hand-Nibbler 163
Handnietgerät, hydraulisch, Cherry, G800 240
Handnietgerät, Satz, hydraulisch, Cherry, G800CMR 241
Handnietpressen 29 - 30
Handnietzange, Annietmutter-Niete 235
Handnietzange, CherryLock "A" 235
Handnietzange, CherryMax 235
Hartmetall-Bohrer, Composite 80
Hartmetall-Bohrer, Standard Länge 80
Hartmetall-Entgratmesser, für Rohrbearbeitung 320
Hartmetall-Frässtifte 83 - 85
Hartmetall-Schleifstifte 83 - 85
Hebelwerkzeuge 171
Heftnadeln für Bohrschablonen 1
Heftnadeln (Spannwerkzeuge) 1 - 7
Heftnadeln, Clecos 1 - 7
Heftnadelschrauber, Druckluft, Sechskantmutter 4
Heftnadelschrauber, Druckluft, zylindrische Mutter 6 - 7
Heftnadelschrauber, Batteriebetrieben, zylindrische Mutter 6
Heftnadelzange 3
Heißluftgebläse, Akku betrieben 164
Heli-Coil Gewindelehrdorne 329
Heli-Coil Hand-Einbauwerkzeuge 326
Heli-Coil Hand-Gewindebohrer 327 - 328
Helicon PCD Bohrer 82
Hi-Lok Nuss, mit Öffnung/Auswurf 177
Hi-Lok, Collar Ausbauzange 191
Hi-Lok, Ein- u. Ausbau-Handwerkzeuge 176 - 191
Hi-Lok, Lehren 175
Hi-Lok, Ratschen, pneumat. 213 - 230
Hi-Lok, Schrauber mit Winkelfuß, Pistolengriff 199 - 212
Hi-Lok, Schrauber, autom. Collarzuführung 231
Hi-Lok, Schrauber, Ein- u. Ausbau, Satz 193 - 196
Hi-Lok, Schrauber, gerade, Pistolengriff 197 - 198
Hi-Lok, Stiftschlüssel 174
HI-SHEAR, Döpper 23
Hi-Torque Schraubwerkzeuge 121
Hohlfräser, mit Gewinde 68
Hydraulisches Handnietgerät, Cherry, G800 240
Hydraulisches Handnietgerät, Satz, Cherry, G800CMR 241
Hydraulisches-Handnietgerät für Blindnietmuttern 261

JO-BOLT / VISU-LOK, Einbauwerkzeuge 262 - 271
JO-BOLT / VISU-LOK, Einbauwerkzeuge, Satz 303 - 309

Kelchwerkzeuge, Hand- 318 - 319
Kleb-/Dichtstoffe, Applikationswerkzeuge/Zubehör 166 - 172
Klemmen, Kniehebel 9 - 16
Kniehebelspanner 9 - 16
KNU-VISE, Klemmen 9 - 14
Konische Fräsbohrer 100
Kugelkopf, Sechskant-Winkelschlüssel-Satz 146
Kunststoff-Fräser 100

Lehre, Einstell- (G784/GBP784B) 234
Lehren, Cherry Niete 234
Lehren, Hi-Lok 175
Lehren, Huck Niete 234
Lineale, Stahl- 148
Lochsägen 68 - 69
Lochsägen, Diamantbestückt, Composite 76
Lochsucher mit Bohrbuchse 115
Lochsucher mit Körner 115
Lockbolt Nietgeräte, pneumatisch 255 - 259
Lockbolt & Blindniete Montagewerkzeuge 232 - 260
Luftfahrt-Blindniete, Nietgeräte, pneumatisch 251 - 254
Luftregulierventil 18

MagLite, Taschenlampen 160
Magnet-Heber 149
Massebürsten 155
Meißel, Collar, Lockbolts 24
Meißel, für Niethammer 24
Messlehren, TRULOK 314 - 315
Montagewerkzeuge, Blindniete & Lockbolts 232 - 260

Nadelfeilen-Satz 160
Nibbler, Hand- 163
Nibbler, pneumatisch 163
Nietausbohrer, Kobalt 100
Nietaustreiber, für Niethammer 24
Nieteinsätze 36
Nieteinsätze, Satz 37
Nietfräse, Satz, pneumatisch 39
Nietfräsen, pneumatisch 38 - 40
Nietfräser, Hartmetall bestückt 40
Nietgerät Mod. 200, pneumatisch, Double Action 260
Nietgerät, pneumatisch, Annietmutter-Blindniete 250
Nietgeräte, pneumatisch, CherryLock 249
Nietgeräte, pneumatisch, CherryLock "A" 247 - 248
Nietgeräte, pneumatisch, CherryMax 243 - 246
Nietgeräte, pneumatisch, Lockbolt 255 - 259
Nietgeräte, pneumatisch, Luftfahrt Blindniete 251 - 254
Nietgeräte, pneumatisch, Standard Blindniete 250 - 254
Nietgeräte, Split-, Blindniet & Lockbolt Montage 233
Nietgeräte-Sätze, Blindniet & Lockbolt Montage 233
Niethammer, pneumatisch 18 - 19
Niethammer, Rückschlaggedämpft 19
Niethammer, Satz 19
Nietmaschine, stationär 17
Nietpressen, handbetätigt 29 - 30
Nietpressen, pneumatisch 31 - 33
Nietpressen, pneumatisch, Tisch-/Ständermontage 34 - 35
Nietstiftfräser 311
Nietschere, Hand 153
Nietschere, Schraubstock 153
Nuss, Hi-Lok, mit Öffnung/Auswurf 177

Optisches Tiefen-Mikrometer 312

PCD Senker 60 - 61
PCD-Bohrer 81 - 82
Planfräser, Rückzug 64 - 67
Plansenker, Hartmetall, mit Gewinde 72
Plansenker, mit geradem Schaft 70
Plastikkappe, für Döpper 20
Pneumatische Nibbler 163
Poliermaschine, CYCLO, elektrisch, Doppel-Kopf 331
Polier-Zubehör, CYCLO, Polierscheiben, Bürsten 331
Prüfgerät, für Seilspannung 324 - 325
Prüfgerät, für Zugfestigkeit von Seilschuhen 322

Quetschgerät, für Seilschuhe, mechanisch 323

Ratschen, Hi-Lok, pneumatisch 213 - 230
Reibahlen, mit Führung, HSS- 102 - 103
Reifenprofil-Tiefenmesslehre 148
Ringschlüssel, für Rohrverschraubungen 154
Rohr-Endbearbeitungsmaschinen 320
Rollenscheren, pneum. 162
Rückzug-Planfräser 64 - 67
Rückzug-Senker 64 - 67

Sägeblätter, Diamantbestückt, Composite 75
Schaftfräser, Diamantbestückt, Composite 77
Scheren, Blech-, pneumatisch 161 - 162
Schlagschere, pneumatisch 161
Schleifstifte, Hartmetall 83 - 85
Schmiermittel, Boelube 91
Schneider, Farbe, mit Gewinde 155
Schraubenausdreher, mit Vierkantschaft 147
Schraubendreher, Hand, Phillips 145
Schraubendreher, Hand, Torq-Set 145
Schraubendreher, Hand, Tri-Wing 145
Schraubendrehereinsätze, French Recess 125
Schraubendrehereinsätze, Hi-Torque 121
Schraubendrehereinsätze, Mortorq 125
Schraubendrehereinsätze, Phillips 122 - 123
Schraubendrehereinsätze, Schlitz 124 - 125
Schraubendrehereinsätze, Sechskant 126 - 127
Schraubendrehereinsätze, Torq Set 130 - 135
Schraubendrehereinsätze, Torx 128 - 129
Schraubendrehereinsätze, Tri-Wing 136 - 139
Schraubendrehereinsätze, Vierkant 127
Schraubenlöser, für Niethammer 147
Schraubenlöser, mit Bithalter 147
Schrauber, Hi-Lok, autom. Collarzuführung 231
Schrauber, Hi-Lok, Ein- u. Ausbau, Satz 193 - 196
Schrauber, Hi-Lok, gerade, Pistolengriff 197 - 198
Schrauber, Hi-Lok, mit Winklfuß, Pistolengriff 199 - 212
Schrauber, pneumatisch, für Bits 120
Schraubglocken, Heftnadeln 2
Schraubheftnadeln, Flügelmutter 5
Schraubheftnadeln, Rändelmutter 2
Schraubheftnadeln, Sechskantmutter 4
Schraubheftnadeln, zylindrische Mutter 6 - 7
Schraubwerkzeuge 122 - 146
Schwenkbügel, für Nietpressen 30

Sealant Werkzeuge 165 - 172
Sealant, Hebelwerkzeuge 171
Sealant, Niethammer Spachtel 172
Sechskant-Winkelschlüssel-Satz, Kugelkopf 146
Seilhämmergerät, pneumatisch, Satz 321
Seilschuh-Quetschgerät, mechanisch, Satz 323
Seilspannungs-Prüfgeräte 324 - 325
Seitenschneider, für Nietstifte 153
SEMCO Dosierpistole, handbetätigt 165
SEMCO Dosierpistole, pneumatisch 165
SEMCO, Dosierpistolen, Zubehör 165
Senk-Anschlaghalter 46 - 52
Senker mit Zapfen, Diamantbestückt, Composite 78
Senker, für BRILES Niete 53
Senker, für Kohlefaser u. Kevlar 60
Senker, mit geradem Schaft 62 - 63
Senker, mit Gewinde 53 - 62
Senker, mit Gewinde, DAN5109 62
Senker, PCD 60 - 61
Senker, Rückzug 64 - 67
Sicherungsdraht, Edelstahl 151
Slimsert Handeinbauwerkzeuge 330
Snap-Soc 20
SPACEMATIC, Annietmutter-Bohrmaschine 90
Spachtel 170 - 171
Spachtel, für Niethammer 172
Spänehaken, Hand 152
Spannzangen 97
Speerbohrer, Hartmetall, Composite 79
Spiegel, Inspektion 149
Split-Nietgeräte, Blindniet & Lockbolt Montage 233
Stabschleifer, Pneumatisch 87
Stahl-Gegenhalter 26 - 27
Stahllineale 148
Standard Blindniet-Geräte, pneumatisch 250 - 254
Stationäre Dimpelmaschine 17
Stationäre Nietmaschine 17
Staubsauger, Druckluft 156 - 157
Steckschlüssel für Muttern 142
Steckschlüssel, Sechskant-, mit Vierkantantrieb 1/4" 143
Steckscklüssel, ASP-Niete 234
Stichsägeblätter, Diamantbestückt, Composite 77
Stiftauffangbeutel (Blindnietgeräte) 234
Stiftschlüssel, Hi-Lok 174
Suchspiegel 149

Taschenlampen, MagLite 160
Tiefenmesslehre, Reifenprofil- 148
Tiefen-Mikrometer, optisch 312
Tisch-Nietpressen, pneumatisch 34 - 35
Trennschleifer für Nietstifte 310
TRULOK, Messlehren 314 - 315

Vakuumsauger, Waben-, Fehlerprüfung 173
Ventil-Ausdreher 148
Verlängerung, Sechskant auf Vierkant 143
VISU-LOK / JO-BOLT, Einbauwerkzeuge 262 - 271
VISU-LOK / JO-BOLT, Einbauwerkzeuge, Satz 303 - 309
VISU-LOK II, Einbauwerkzeuge 280 - 289

Waben-Fehlerprüfung, Vakuumsauger 173
Wabenfräser 73 - 74
Walzenfräse, pneumatsich 41 - 45
Warzeinsätze 36
Warzeinsätze, Satz 37
Werkzeugsatz, Flugzeugbauer 332 - 333
Winkelbohrfutter, Winkelgetriebe 98 - 99
Winkelschleifer, pneumatisch 86
Winkelschleifer, pneumatisch, Dichtstoff-Entferner 168
Wirbelzangen, für Drahtsicherung 150 - 151
Wolfram-Gegenhalter 25

Zange, für Hi-Lok, Collar Ausbau 191
Zange, für Leichtmetallverschraubungen 155
Zange, Heftnadeln & Blechklemmen 3
Zangen, für Blindnietmuttern 235
Zangen, für Drahtsicherung 150 - 151
Zugfestigkeitstester, für Seilschuhe 322
Zugköpfe für Cherry G800 242
Zugköpfe, CherryLock 249
Zweifasen-Bohrer 101

Adapter, Hex Shank Drive to Male Square 143
Aerospace Blind Rivets, Riveter, pneumatic 251 - 254
Air Bleeder, for hydropneum. Riveter 234
Angel Drills, Offset 86
Angle Drill, pneumatic 95 - 96
Application Tools/Accessories, Sealant 166 - 172
ASP - Driver 234

Back Countersink Cutter 64 - 67
Back Spotfacer Cutter 64 - 67
Bench-Riveter, pneumatic 34 - 35
Bit Holder, for Machines 140 - 143
Bit Holders, Hand- 144
Bit Ratchet, Hand- 146
Bits, French Recess 125
Bits, Hi-Torque 121
Bits, Mortorq 125
Bits, Phillips 122 - 123
Bits, Slotted 124 - 125
Bits, Socket Head (Allen) 126 - 127
Bits, Square Recess 127
Bits, Torq-Set 130 - 135
Bits, Torx 128 - 129
Bits, Tri-Wing 136 - 139
Blind Rivet & Lockbolt Installation Tools 232 - 260
Blind-Rivet-Nut, Installation Tools 235
Boelube Lubricant 91
Brass Air Tool Regulator 18
BRILES, Countersink Tools 53
Brushes, for Rivet Holes 155
Bucking Bar Kit, Recoilless 28
Bucking Bars, Steel 26 - 27
Bucking Bars, Tungsten 25
Burraway Tools 118 - 119
Burrs, Solid Carbide 83 - 85

Cable Swaging Tool Kit, mechanic, portable 323
Cable Swaging Tool Kit, pneumatic, portable 321
Cable Tensiometer 324 - 325
Carbide Deburring Blades, for Tubes/Pipes 320
Cherry, Gages 234
Cherry, Hydraulic Hand Riveter G800 240
Cherry, Hydraulic Hand Riveter Kit, G800CMR 241
CherryLock "A", Hand-Riveter 235
CherryLock "A", Riveter, pneumatic 247 - 248
CherryLock, Riveter, pneumatic 249
CherryMax, Hand-Riveter 235
CherryMax, Riveter, pneumatic 243 - 246
Chip Chaser, Hand 152
Chisel, Collar, Lockbolts 24
Chisel, for Rivet Hammer 24
Clamps, Hand operated 8
Clamps, Plier operated 8
Clamps, Toggle 9 - 16
Cleaner, Air 156
Cleco Tool, Hand operated, Cylindrical-Nut 6 - 7
Cleco Tool, pneumatic, Cylindrical-Nut 6 - 7
Cleco Tool, pneumatic, Hex-Nut 4
Cleco, Plier 3
Clecos 1 - 7
Clecos, Cylindrical Body 6 - 7
Clecos, Fasteners 1 - 7
Clecos, Hex Nut 4
Clecos, knurled Nut 5
Clecos, Plier & Hand operated 3
Clecos, Wing Nut 5
Collar Removal Tools, Hi-Lok 189 - 191
Collets 97
Commercial Blind Riveter, pneumatic 250 - 254
COMPOSI-LOK II, Installation Tools 290 - 299
COMPOSI-LOK, Installation Tool-Kits 303-309
COMPOSI-LOK, Installation Tools 272 - 279
COMPOSI-LOK III, Installation Tools 300 - 302
Composite Countersink Cutter 60 - 61
Composite Cutting Tools 75 - 82
Composite Dagger-Drills, Carbide 79
Composite Drill-Reamer, Carbide 79
Composite Drills, Carbide, for Kevlar 100
Composite Drills, Solid Carbide 80
Composite Hole Saws, Diamond plated 76
Composite Jigsaw Blades, Diamond plated 77
Composite piloted Countersink, Diamond plated 78
Composite Material Repair Tool Kit 334
Composite Routers, Diamond plated 77
Composite Saw Blades, Diamond plated 75
Cordless Blind Riveter 236
Cordless Blind Riveter Kit 237
Counterbores, Carbide, threaded Shank 72
Counterbores, straight Shank 70
Countersink Cutter, Back- 64 - 67
Countersink Cutter, Composite 60 - 61
Countersink Cutter, PCD 60 - 61
Countersink Cutter, straight Shank 63
Countersink Cutter, threaded Shank 53 - 62
Countersink Cutter, threaded Shank, DAN5109 62
Countersink, Micro-Stops 46 - 52
Cutter, Countersink, for BRILES Rivets 53
Cutter, for pneum. Weld Shaver 41 - 45
Cutter, for Rivet Shaver 38 - 40
Cutter, Honeycomb 73 - 74
Cutter, Paint, threaded shank 155
Cutter, Sealant Removal, threaded shank 168
CYCLO Polishing Accessories, Brushes, Pads 331
CYCLO Polishing Machine, electrical, Dual Head 331
C-Yoke, Swivel, for Compression Riveters 30

Dagger-Drills, Carbide, Composite 79
DAN5109, Countersink Cutter, threaded Shank 62
Deburring Blades, Carbide, for Tubes/Pipes 320
Deepth Micrometer, optical 312
Depth Gauge, Tyre Tread- 148
DESTACO, Clamps 15
Diamond plated Hole Saws, Composite 76
Diamond plated Jigsaw Blades, Composite 77
Diamond plated piloted Countersink, Composite 78
Diamond plated Routers, Composite 77
Diamond plated Saw Blades, Composite 75
Dies, Dimple 36
Dies, Dimple, Kits 37
Dimple Die Kits 37

Dimple Dies 36
Dimpling Machine, stationary 17
Double Action-Riveter Mod. 200, pneumatic 260
Double Margin Drill 101
Drill Bushing Kit 114
Drill Bushing Strap Duplicators 115
Drill Bushings 114
Drill Jigs, for Anchor Nuts 116 - 117
Drill Position Targeting System 313
Drill Stops 114
Drill-Reamer, Carbide, Composite 79
Drills, Carbide, for Composite 60
Drills, Cobalt, extra long, 12" 110 - 111
Drills, Cobalt, extra long, 6" 108 - 109
Drills, Cobalt, Jobber Length 104 - 107
Drills, Cobalt, Rivet Knockout 100
Drills, Dagger-, Carbide, Composite 79
Drills, Double Margin 101
Drills, for Nutplate-Drillmotor 90
Drills, PCD 81 - 82
Drills, pneumatic, Angle Head 95 - 96
Drills, pneumatic, Pistol-Grip 91 - 93
Drills, pneumatic, Straight Handle 94
Drills, pneumatic, with Governor 91
Drills, Solid Carbide, Composite 80
Drills, Solid Carbide, Jobber length 80
Drills, Threaded Shank Adapter 112 - 113
Driver, ASP-Rivets 234
Dual Head Polishing Machine, CYCLO, electrical 331
Duplicator, Strap, Drill Bushing Type 115
Duplicator, Strap, Punch Type 115

Edge Breaker, Hand Tool 152
End Finishing Machines, Tube/Pipe- 320
Extensions, Hex Shank Drive to Male Square 143

Fastener, Plier 3
File Set, Needles- 160
Flaring Tools, Hand- 318 - 319
Flashlights, MagLite 160
Flat-Chisel, for Rivet Hammer 24
Flush Rivet Sets 20 - 23
French Recess Bits 125

Gage, Shift Setting- (G784/GBP784B) 234
Gages, Cherry Rivets 234
Gages, Hi-Lok 175
Gages, Huck Rivets 234
Gages, TRULOK 314 - 315
Grinder, Angle Die, pneumatic, Sealant Removal 168

Halosensor 313
Hand Bit Holder 144
Hand Flaring Tools 318 - 319
Hand Inserting Tools, Heli-Coil 326
Hand Inserting Tools, Slimsert 330
Hand Rivet Squeezer 29 - 30
Hand Riveter Kit, hydraulic, Cherry, G800CMR 241
Hand Riveter, hydraulic, Cherry, G800 240
Hand Taps, Heli-Coil 326 - 328
Hand Tool, Edge Breakers 152
Handi-Klamps 8
Hand-Nibbler 163
Hand-Riveter, CherryLock "A" 235
Hand-Riveter, CherryMax 235
Hand-Riveter, Nutplate-Rivets 235
Heli-Coil Hand Inserting Tools 326
Heli-Coil Hand Taps 327 - 328
Heli-Coil Thread Gages 329
Helicon PCD Drills 82
Hex-Ball, L-Wrenches 146
Hex-Keys, Hi-Lok 174
Hi-Lok Socket, Hex Ecjecting 177
Hi-Lok, Collar Removal Plier 191
Hi-Lok, Gages 175
Hi-Lok, Hand Installation & Removal Tools 176 - 191
Hi-Lok, Hex-Keys 174
Hi-Lok, Machine, Automatic Collar Feed 231
Hi-Lok, Machine, Installation & Removal Kits 193 - 196
Hi-Lok, Machine, L-Head, Pistol Grip 199 - 212
Hi-Lok, Machine, Straight, Pistol Grip 197 - 198
Hi-Lok, Ratchets, pneumatic 213 - 230
HI-SHEAR, Rivet Set 23
HI-Torque Driver 121
Holder, for Bits 140 - 143
Holder, for Composite Hole Saws 76
Holder, with internal thread 53
Hole Saws 68 - 69
Hole Saws, Diamond plated, Composite 76
Hollow Cutter, threaded Shank 68
Honeycomb Cutter 73 - 74
Honeycomb Damage Detecting, Vacuum Cup 173
Hot Air Gun, cordless, Accu rechargeable 164
Hydraulic Hand Riveter Kit, Cherry, G800CMR 241
Hydraulic Hand Riveter, Cherry, G800 240
Hydraulic Hand Riveter/Nutsetter 235

Inserting Tools, Hand, Heli-Coil 326
Inspection-Mirrors 149
Installation & Removal Tools, Hi-Lok, Hand-Tools 176 - 191
Installation Tool, Hand operated, Cylindrical-Nut 6 - 7
Installation Tool, pneumatic, Cylindrical-Nut 6 - 7
Installation Tool, pneumatic, Hex-Nut 4
Installation Tools for Connector Contacts 316 - 317
Installation Tools, Blind Rivets & Lockbolts 232 - 260
Installation Tools, COMPOSI-LOK 272 - 279
Installation Tools, COMPOSI-LOK II 290 - 299
Installation Tools, COMPOSI-LOK III 300 - 302
Installation Tools, JO-BOLT / VISU-LOK 262 - 271
Installation Tools, VISU-LOK II 280 - 289

Jigsaw Blades, Diamond plated, Composite 77
JO-BOLT / VISU-LOK, Installation Tool-Kits 303 - 309
JO-BOLT / VISU-LOK, Installation Tools 262 - 271

Knock-Out Punches, for Rivet Hammer 24
KNU-VISE, Clamps 9 - 14

Lockbolt & Blind Rivet Installation Tools 232 - 260
Lockbolt Riveter, pneumatic 255 - 259
Lubricant, Boelube 91
L-Wrenches, Hex Ball 146

Machine, Hi-Lok, Automatic Collar Feed 231
Machine, Hi-Lok, Installation & Removal Kits 193 - 196
Machine, Hi-Lok, L-Head, Pistol Grip 199 - 212
Machine, Hi-Lok, Straight, Pistol Grip 197 - 198
MagLite, Flashlights 160
Magnetic Retrieving Tool 149
Metal Cutting Shears, pneumatic 161
Micro-Stop, Countersinks 46 - 52
Mirrors, Inspection 149
Mortorq, Bits 125

Needle File Set 160
Nibbler, Hand- 163
Nibbler, pneumatic 163
Non-Metallic Router 100
Nutplate-Drillmotor 90
Nut Setters 142
Nutplate Riveter, pneumatic 250
Nutplate-Rivets, Hand-Riveter 235
Nut-Setter, Fasteners 2

Offset Angle Drills 98 - 99
Optical Deepth-Micrometer 312

Paint Cutter, threaded shank 155
PCD Countersink Cutter 60 - 61
PCD Drills 81 - 82
Phillips Bits 122 - 123
Piloted Countersink, Diamond plated, Composite 78
Piloted Reamers, HSS 102 - 103
Pilots, for Back Countersinks/Spotfacer 67
Pilots, for Counterbores with straight Shank 71
Pilots, for Countersink Cutters 54 - 62
Pilots, for Hole Saws 68 - 69
Pilots, for Stop Counterbores 72
Pintail Milling Unit 311
Plastic Cap, for rivet set 20
Plate Nut Drill Jigs 116 - 117
Plier, Fastener & Clamps 3
Plier, for electrical Connectors 155
Pliers, for Blind Nuts 235
Pliers, for Hi-Lok, Collar Removal 191
Pliers, for Safety Wire 150 - 151
Pneumatic Nibbler 163
Polishing Equipment, CYCLO, Brushes, Pads 331
Polishing Machine, CYCLO, electrical, Dual Head 331
Positive Feed Drill 88 - 89
Pry Tools, Sealant 171
Pulling Heads for G800 242
Pulling Heads, CherryLock 249
Pulling Heads, Double Action, Mod. 200 260
Pull-Tester Kit, for swaged cable terminals 322
Punch Type Strap Duplicators 115

Ratchets, Hi-Lok, pneumatic 213 - 230
Reamers, Piloted, HSS- 102 - 103
Removal Tool, Collar Chisel 24
Removal Tool, Screw, for Rivet Gun 147
Removal Tool, Valve Core 148
Removal Tools for Connector Contacts 316 - 317
Rivet Cutter, Bench Type 153
Rivet Cutter, Carbide tipped 40
Rivet Cutter, Hand 153
Rivet Gun Kit 19
Rivet Gun, pneumatic 18 - 19
Rivet Gun, recoilless 19
Rivet Hole Brush 155
Rivet Knock-Out Drill, Cobalt 100
Rivet Sets 20 - 23
Rivet Sets, HI-SHEAR 23
Rivet Sets, Universal Head 20 - 23
Rivet Shaver, pneumatic 38 - 40
Rivet Shaver, pneumatic, Kit 39
Rivet Stem Shaver 310
Rivet Squeezer Kits 37
Rivet Squeezer Sets 36
Rivet Squeezer, Hand 29 - 30
Rivet Squeezer, pneumatic 31 - 33
Rivet Squeezer, pneumatic, Bench Models 34 - 35
Riveter Kits, Blind Rivet & Lockbolt Installation 233
Riveter Kits, Blind, cordless 237
Riveter Kits, Blind, cordless, manual, pneumatic 238 - 239
Riveter Mod. 200, pneumatic, Double Action 260
Riveter, Blind, cordless 236
Riveter, pneumatic, Aerospace Blind Rivets 251 - 254
Riveter, pneumatic, CherryLock 249
Riveter, pneumatic, CherryLock "A" 247 - 248
Riveter, pneumatic, CherryMax 243 - 246
Riveter, pneumatic, Commercial Blind Rivets 250 - 254
Riveter, pneumatic, Lockbolt 255 - 259
Riveter, pneumatic, Nutplate Rivets 250
Riveter, Split-, Blind Rivet & Lockbolt Installation 233
Riveting Machine, stationary 17
Roll-Shears, pneumatic 162
Rotary Files, Solid Carbide 83 - 85
Router, Diamond plated, Composite 77
Router, Non-Metallic Materials 100
Router, Taper 100
Rules, Steel- 148

Safety Wire, Stainless Steel 150 - 151
Saw Blades, Diamond plated, Composite 75
Scraper, for Rivet Gun, Sealant 172
Scraper, Sealant 170 - 171
Screw Extractor, with square shank 147
Screw Removal Tool, for Rivet Gun 147
Screwdriver Tools 122 - 146
Screwdriver, Hand, Phillips 145
Screwdriver, Hand, Torq-Set 145
Screwdriver, Hand, Tri-Wing 145
Screwdriver, pneumatic, for Bits 120
Screw-Removal Tool, with Bitholder 147
Sealant Application Tools/Accessories 165 - 172
Sealant Gun Accessories, SEMCO 165

Sealant Gun, manual, SEMCO 165
Sealant Gun, pneumatic, SEMCO 165
Sealant Removal Angle Die Grinder, pneumatic 168
Sealant Removal Cutter, threaded shank 168
Sealant Scraper for Rivet Gun 172
Sealant Tools 165 - 172
Sealant, Pry Tools 171
SEMCO Sealant Gun, manual 165
SEMCO Sealant Gun, pneumatic 165
SEMCO, Accessories, Sealant Gun 165
Shears, Sheet Metal, pneumatic 161 - 162
Sheet Metal Tool Kit 332 - 333
Shift Setting Gage (G784/GBP784B) 234
Side Nipper, for Rivet Stems 153
Slimsert Hand Inserting Tool 330
Slotted Bits 124 - 125
Smoothing Tools/Accessories, Sealant 166 - 172
Snap-Soc 20
Socket Head (Allen) Bits 126 - 127
Socket, Hi-Lok, Hex Ejecting 177
Sockets, Hex, Square-Drive 1/4" 142
Solid Carbide Burrs 83 - 85
Solid Carbide Drills, Composite 80
Solid Carbide Drills, Jobber Length 80
Solid Carbide Rotary Files 83 - 85
SPACEMATIC, Nutplate Drillmotor 90
Split-Riveter, Blind Rivet & Lockbolt Installation 233
Spotfacer, Back 64 - 66
Square Recess Bits 127
Stationary Dimpling Machine 17
Stationary Riveting Machine 17
Steel Rules 148
Steel-Bucking Bars 26 - 27
Stem Catcher Bag (Riveter) 234
Straight Die Grinder, pneumatic 87
Swaging Tool Kit, for Cable Terminals 323
Swivel Yoke, for Compression Riveters 30

Tab-Shear, pneumatic 161
Taper Router 100
Taps, Hand-, Heli-Coil 326 - 328
Temporary Fasteners 1 - 7
Tester, for Cable Tension 324 - 325
Tester, Pull-, for Cable Terminals 322
Thread Gages, Heli-Coil 329
Threaded Shank Adapter Drills 112 - 113
Toggle Pliers & Clamps 9 - 16
Tool Kit, Sheet Metal 332 - 333
Torq-Set Bits 130 - 135
Torx Bits 128 - 129
Tri-Wing Bits 136 - 139
TRULOK, Gages 314 - 315
Tube/Pipe End Finishing Machines 320
Tungsten-Bucking Bars 25
Twisters, for Safety Wire 150 - 151
Tyre Tread Depth Gauge 148

Vacuum Cleaner, pneumatic 156
Vacuum Cup, Honeycomb Damage Detecting 173
Vacuum, Dust Control 157 - 159
Valve Core Removal Tool 148
VISU-LOK / JO-BOLT, Installation Tool-Kits 303 - 309
VISU-LOK / JO-BOLT, Installation Tools 262 - 271
VISU-LOK II, Installation Tools 280 - 289

Weld Shaver, pneumatic 41 - 45
Wire Twister & Kits 150 - 151
Wrench, Tube Fitting, Snap Type 154

KALTVERFORMUNG
COLDWORKING

The Split Sleeve Cold Expansion Process

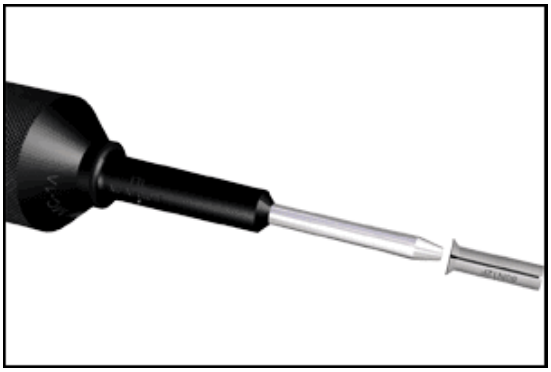

Step 1.
After verifying the starting hole size, slip the pre-lubricated split sleeve onto the mandrel, which is attached to the hydraulic puller unit.

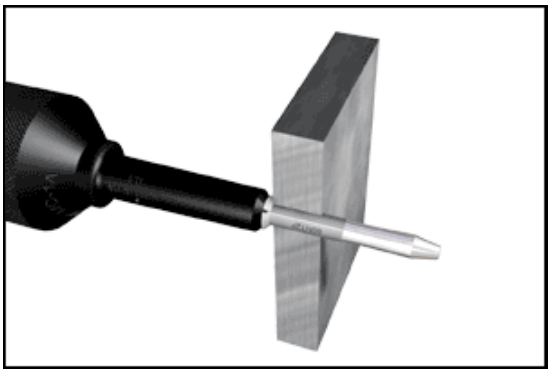

Step 2.
Insert the mandrel and sleeve through the hole with the nosecap held firmly against the work piece.

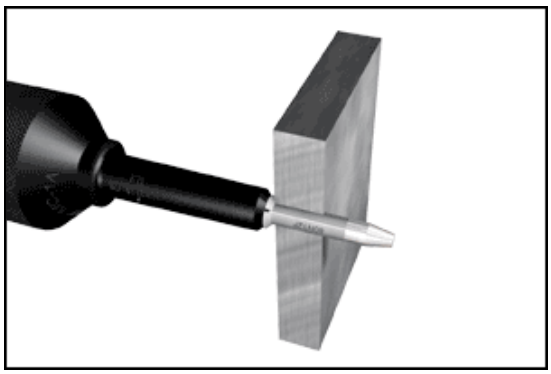

Step 3.
Activate the puller unit. The mandrel is drawn through the sleeve and the hole. The combined thickness of the sleeve and the mandrel major diameter radially expand the hole. The lubricated sleeve reduces the pull force required, protects the hole, and allows the mandrel to exert radial forces through the entire thickness of the material.

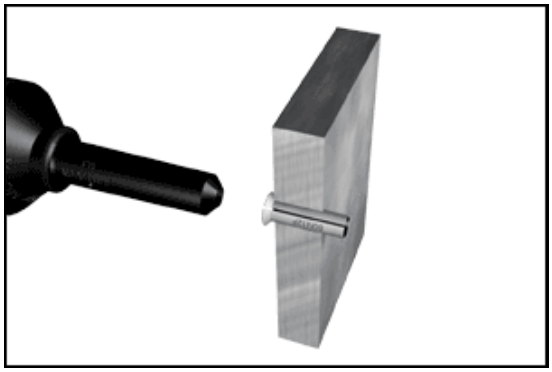

Step 4.
Remove and discard sleeve

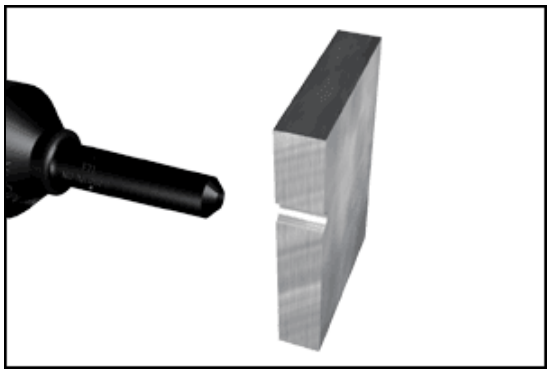

Step 5.
Ream hole to final size.
Use pin-end of combination gage to confirm size.

Informationen über Werkzeuge, Hülsen und Dorne auf Anfrage !

INFORMATIONS FOR TOOLS, SLEEVES AND MANDRELS ON REQUEST !